CNC LATHE

LB15

with OSP5000L-G CNC SYSTEM

OPERATION & MAINTENANCE MANUAL

OKUMA

Your single source for machine & control

Publication No. 2567-E-R4
(August 1987)

SAFETY PRECAUTIONS

The machine is fully equipped with various safety devices to prevent operators and the machine itself from accidents. However, operators are urged to operate the machine with safety in mind observing the following points carefully, without relying on machine-equipped safety devices exceedingly.

1. CHECK THE FOLLOWING BEFORE TURNING ON POWER

   (1) Close the doors of the electric control cabinet and the operation panel.

   (2) Never place obstacles around the machine.

   (3) Turn on switches only in the following sequence:

   Main power disconnect first and then the CONTROL ON button on the operation panel.

2. PRECAUTIONS TO OBSERVE WHEN USING A CHUCK

   (1) Before starting the spindle or cutting operations, close the front shield without fail.

   (2) Strictly observe the allowable spindle speed for the chuck installed. Never run the spindle exceeding the maximum allowable spindle speed.

   (3) When a chuck or fixture unique to the user's application is used, check the allowable maximum spindle speed and run the spindle within the allowable range. Pay due attention to workpiece gripping force and balance also.

   (4) The maximum spindle speed can be limited by inputting the spindle speed with G5Ø. To ensure safety in operation, input this spindle speed limiting command in the program.

   G5Ø S****

   (5) If the spindle is run at a speed close to the allowable maximum speed:

   - Avoid imbalance in the workpiece clamped in the chuck.

   - Apply the allowable maximum pressure to grip the workpiece since increased centrifugal force reduces chuck's gripping force.

   The allowable maximum spindle speed and applicable pressure for the chuck are indicated on the name plate attached to the front shield as well as on the chuck body. The allowable maximum speed and the applicable pressure ensure a chucking force larger than one-third the original chuck gripping force with the standard soft-top jaw set in line with the chuck body outer periphery.

(6) When special jaws larger than standard soft-top jaws are used:

Lower the spindle speed because the chuck's gripping force will be reduced due to increased centrifugal force and lowered efficiency.

If the jaw tightening nut (jaw nut) is outside the chuck's outer periphery, only one tightening bolt holds the jaws in place, causing very dangerous conditions. Jaw nuts must always be located within the chuck body's outer periphery.

Machine the jaws to the shape meeting the workpiece.

(7) Tighten the bolts on the chuck body, the jaws, and the block securely with lubrication oil applied so that they are torqued to the specification. Tightening force should be greater than 4Ø - 5Ø kg (88 - 11Ø lb).

3. CHECKUP AROUND THE MACHINE

(1) Before starting daily operations, always check the lubrication oil amount.

(2) Always use the specified brand or grade of lubrication oil.

(3) For cutting fluid (coolant), use Okuma's recommendation whenever possible.

(4) Change and replenish lubrication oil for each reservoir at the predetermined schedule as explained in the operation manual.

(5) Clean the filters periodically according to the schedule explained in the operation manual.

(6) Check the indication of the pressure gauges in each of the air and hydraulic lines to make sure that they all read the correct values as specified in the operation manual.

(7) For any work required inside the front shield, turn off power and ensure safety beforehand. For work done at the back of the machine requiring the operator to enter the machine operating zone, do not forget to turn off power before attempting any work.

4. PRECAUTIONS FOR MANUAL AND AUTOMATIC MACHINE OPERATIONS

(1) Always follow the instructions given in the operation manuals.

(2) Never run the machine without protective covers and shields, such as the front shield and chuck cover.

(3) Close the front shield first before starting the machine.

(4) With a new program, never attempt to start actual cutting operations from the beginning. First run the program without setting a workpiece in the machine to check machine operations and interference; after making sure that the program is completely free of bugs, cut a workpiece in the single block mode operation. Only after making sure that the workpiece can be cut without problems in the single block mode operation, the automatic mode operation may be started.

(5) Before attempting the following, always make sure that intended operation can be accomplished safely.

- Spindle rotation
- Turret indexing
- Axis movements

(6) While the spindle is revolving, never touch chips or the workpiece.

(7) Never try to stop a revolving object with hands or tools.

(8) Confirm the jaw installation conditions, hydraulic pressure, and allowable maximum speed for the power chuck.

(9) Check the installed conditions and arrangement of the tools.

(10) Confirm the tool offset settings.

(11) Confirm the zero offset settings.

(12) Confirm the spindle speed and feedrate override dial settings--they must be 100%.

(13) Before feeding the turret, confirm the software-limit settings and the emergency limit LS (limit switch) dog positions for both X and Z axes.

(14) Confirm the position where the turret index/rotation is allowed.

(15) Confirm the tailstock body position.

(16) Make sure that cutting is conducted within the allowable transmission power and torque ranges.

(17) Clamp the workpiece in the chuck or fixture securely.

(18) Check the cutting fluid nozzle positions. They must be set at positions to supply cutting fluid correctly to the cutting point.

5. SETUP

(1) Always make sure that the setup is complete.

(2) After changing the setup, operate the machine step by step to make sure the cutting can be conducted without problems.

(3) Before replacing the chuck and/or chuck jaws, make sure that the chuck and jaws newly set fit the job intended.

(4) When two or more workers work as a group, establish the necessary safety signs, for example, when lifting or setting heavy objects. Also confirm with other workers whether it is "okay" to start the next process or not.

(5) When handling heavy objects, use the crane or equivalent tool.

(6) When attempting unfamiliar setups, check the setup again before beginning setup.

6. WORKPIECE LOADING/UNLOADING

(1) Load and unload workpieces securely.

(2) Retract the turret before loading and unloading a workpiece to a position where the cutting tools on the turret will not injure the operator's hands.

(3) Before attempting loading and unloading of a workpiece, make sure that the spindle is at a complete stop.

(4) Before running a new program, first rotate only the spindle to make sure that the workpiece is securely clamped in the chuck.

(5) To machine irregularly shaped workpieces, make sure that the workpiece is clamped in the chuck securely without imbalance.

(6) When handling heavy workpieces, use the crane, hoist, or other tool.

(7) Before setting a workpiece in the machine, make sure that the workpiece has portions to be used for proper chucking.

7. AT THE END OF THE DAY

(1) Clean the machine.

(2) Locate the turret at the predetermined retraction position.

(3) Before leaving the machine, turn off all power switches.

(4) Turn off power to the machine in the following sequence:

CONTROL ON button on the operation panel first and then the main power disconnect.

8. WHEN A PROBLEM OCCURS

(1) Stop the machine immediately, and push the EMERGENCY STOP switch on the operation panel.

(2) Determine the measures to take under the consultation of the person in charge of maintenance.

(3) When two or more workers work as a group, establish the necessary safety signs, for example, when lifting or setting heavy objects. Also confirm with other workers whether it is "okay" to start the next process or not.

(4) Use only the fuses and other replacement parts of the specified rating.

9. OTHER GENERAL PRECAUTIONS

(1) Wear suitable safety clothes.

(2) Keep work areas clean as well as the machine.

(3) Do not touch controls with wet hands.

1Ø. SAFETY DEVICES AND FUNCTIONS

Contents	Location	Remark
1. Front shield, with grated glass and polycarbonate	Machine	
2. Shield open/close interlock	Machine	optional
3. Chuck interlock	Electric control cabinet	
4. Tailstock spindle interlock	Electric control cabinet	
5. Tailstock spindle position confirmation	Electric control cabinet	optional
6. Foot pedal protection cover	Machine	optional
7. Emergency limit setting LS (limit switch)	Machine	
8. Software limit	Operation panel	
9. Chuck barrier	Operation panel	
1Ø. Turret barrier	Operation panel	2S specification
11. Tailstock barrier	Operation panel	optional
12. Emergency stop button	Operation panel	
13. Slide hold button	Operation panel	
14. Alarm display	Operation panel	
15. Leakage circuit breaker	Electric control cabinet	optional
16. Self-lock cylinder for chuck	Machine	
17. Cycle start requiring simultaneous depression of both buttons	Machine	optional
18. Shear pins in axis drive mechanism	Machine	
19. Shear pin in gearbox output shaft pulley	Machine	

TABLE OF CONTENTS

PAGE

SECTION 1 INTRODUCING YOUR NC LATHE 1

SECTION 2 MACHINE SPECIFICATIONS 2

2-1. SPECIFICATIONS TABLE 2
2-2. SPECIFICATION DIAGRAM 4

SECTION 3 MACHINE OPERATION 5

3-1. BEFORE STARTING OPERATIONS 5
3-1-1. NC Operation 6

3-2. MACHINE OPERATION 7
3-2-1. Hydraulic Power Unit 7
3-2-2. Selection of Spindle Drive Gear Range 11
3-2-3. Hydraulic Power Chuck 14
3-2-4. Cutting Soft Top Blanks of Power Chuck 20
3-2-5. Tool Setting 22
3-2-6. Hydraulic Tailstock Operation 26
3-2-7. After Completion of A Day's Operation 35
3-2-8. Manually Operated Chuck (Four Jaw Independent Chuck) 35

SECTION 4 MAINTAINING YOUR NC LATHE IN THE BEST CONDITION - REGULAR INSPECTION AND MAINTENANCE OF MACHINE 43

4-1. LUBRICATION 44
4-1-1. Headstock Lubrication System 49
4-1-2. Guideway Lubrication System 50

4-2. CLEANING THE FILTER 51
4-3. ADJUSTING CENTRALIZED LUBRICATION UNIT 52
4-4. CLEANING COOLANT TANK 53

4-5. TENSIONING BELTS 54
4-5-1. V-belt Drive from Main Drive Motor to Headstock 54
4-5-2. Timing Belt for Pulse Generator 55
4-5-3. Timing Belt for Z-axis Drive Servomotor 56
4-5-4. Timing Belt for X-axis Servomotor 57

4-6. OTHER MAINTENANCE ITEMS 58
4-6-1. Adjusting Turret Indexing Speed 58
4-6-2. Check The Bed Level 60
4-6-3. Alignment of Headstock 61
4-6-4. Adjustment of Tapered Gibs 62

PAGE

4-7. TROUBLESHOOTING FOR SIMPLE MECHANICAL TROUBLE 63
4-7-1. Trouble with Headstock 63
4-7-2. Trouble with Turret 64
4-7-3. Replacing Shear Pin 64
4-7-4. Others 77

SECTION 5 HANDLING AND INSTALLATION OF MACHINE 78

5-1. CARE IN HANDLING A PRECISION MACHINE 78
5-2. FOUNDATION REQUIREMENTS 81
5-3. GENERAL PROCEDURE FOR INSTALLATION 82
5-4. LEVELLING THE MACHINE 83
5-5. FOUNDATION PLAN 84
5-6. POWER REQUIREMENTS 85

SECTION 6 SPARE PARTS LIST 86

6-1. HYDRAULICS 86
6-2. ELECTRICALS (ON MACHINE) 87
6-3. CONSUMABLE ITEMS (O-ring: those used on sliding parts) 88

SECTION 7 TECHNICAL DATA 89

7-1. TOOLING SYSTEM 9Ø
7-2. DIMENSIONS OF V12 TURRET 91
7-3. TOOLHOLDERS 92
7-4. INTERFERENCE CHART 94
7-5. WORKING RANGE OF MODEL (1S) 95
7-6. WORKING RANGE OF MODEL (1S with tailstock) 96
7-7. DIMENSION OF SPINDLE NOSE (ASA-A2-6) 98
7-8. HYDRAULIC CHUCK AND CYLINDER 99
7-9. HOLLOW TYPE 1ØØ
7-10. HYDRAULIC CIRCUIT DIAGRAM 1Ø1
7-11. DIMENSIONS OF TAILSTOCK (1S with tailstock) 1Ø2
7-12. CHIP CONVEYOR (optional) 1Ø3
7-13. CHIP BUCKET - L-type (optional) 1Ø4

Note: To avoid any confusion over the use of the letter "O (oh)" and figure "0 (zero)" in this manual, the numerical value "0 (zero)" is expressed as "Ø" if there is any possibility of misunderstanding.

"T" (without tailstock) or "C" (with tailstock) may appear in LB series model designation, for example: "LB15T" or "LB15C."

SECTION 1 INTRODUCING YOUR NC LATHE

Thank you for choosing an Okuma Model LB15 CNC lathe. We are proud to have you among our Okuma family of users.

This instruction manual contains concise information on the installation, setup, operation and maintenance of your Model LB15 CNC lathe. To make the most of its outstanding performance over a long period, the machine must be properly installed, and operating and maintenance procedures must be clearly understood and carefully followed. You are encouraged to study this instruction manual carefully before the machine is installed and to keep it on file for future reference.

SECTION 2 MACHINE SPECIFICATIONS

2-1. SPECIFICATIONS TABLE

Machine Model		LB15
NOMINAL SIZE		250 x 500
NUMBER OF CONTROLLED AXES		2
SWING OVER BED	mm (in.)	400 (15.75)
MAX. TURNING DIAMETER x MAX. WORK LENGTH	mm (in.)	250 x 500 (9.84 x 9.06)
MAIN SPINDLE Spindle diameter at front bearing	mm(in.)	100 (3.94)
Bore diameter	mm(in.)	56 (2.20)
Spindle nose		ASA A_2 - 6
Internal taper		MT. No. 6
Range of spindle speed	rpm	75 - 4,200
Number of spindle speeds		Auto 2 range x infinitely variable
CARRIAGE (Z-AXIS) Longitudinal travel	mm (in.)	520 (20.47)
Cutting feedrates	mm/rev (ipr)	0.01 - 1,000.00 (0.0001 - 40.0000)
Rapid traverse speed	mm/min (ipm)	12,000 (472)
CROSS-SLIDE (X-AXIS) Cross-slide travel	mm (in.)	130 + 45 (5.12 + 1.77)
Cutting feedrates	mm/rev (ipr)	0.01 - 1,000.00 (0.0001 - 40.0000)
Rapid traverse speed	mm/min (ipm)	12,000 (472)
TURRET No. of tools		12
Size of OD/ID turning tool	mm (in.)	25 x 25/ø40 (1 x 1/ø1 1/2)
BED Length of slideway	mm (in.)	1170 (46.06)
Width of slideway	mm (in.)	390 (15.35)

Machine Model		LB15
HYDRAULIC TAILSTOCK Diameter of quill	mm (in.)	ø90 (3.54)
Taper of center		MT No. 5
Quill stroke	mm (in.)	120 (4.72)
ELECTRIC MOTOR Main spindle drive motor	kW (HP)	VAC11/7.5 (15/10) (30 min./cont. rating)
Z-axis drive motor	kW (HP)	Brushless, 2.4 (3.2) (AC)
X-axis drive motor	kW (HP)	Brushless, 1.5 (2) (AC)
Hydraulic power unit pump motor	kW (HP)	AC 1.5 (2)
Coolant pump motor	kW (HP)	0.25 (0.33) [Tank capacity: 150 (40 U.S. gal.)]
HYDRAULIC POWER UNIT Tank capacity	liters (U.S. gal)	40 (10.6)
Pressure adjustable range	kg/cm^2 (psi)	Max. 30 (427)
FLOOR SPACE REQUIREMENTS	mm (in.)	1855 x 2735 (73.03 x 107.68)
NET WEIGHT OF MACHINE (including CNC unit)	kg (lb.)	4,500 (9,900)

2-2. SPECIFICATION DIAGRAM

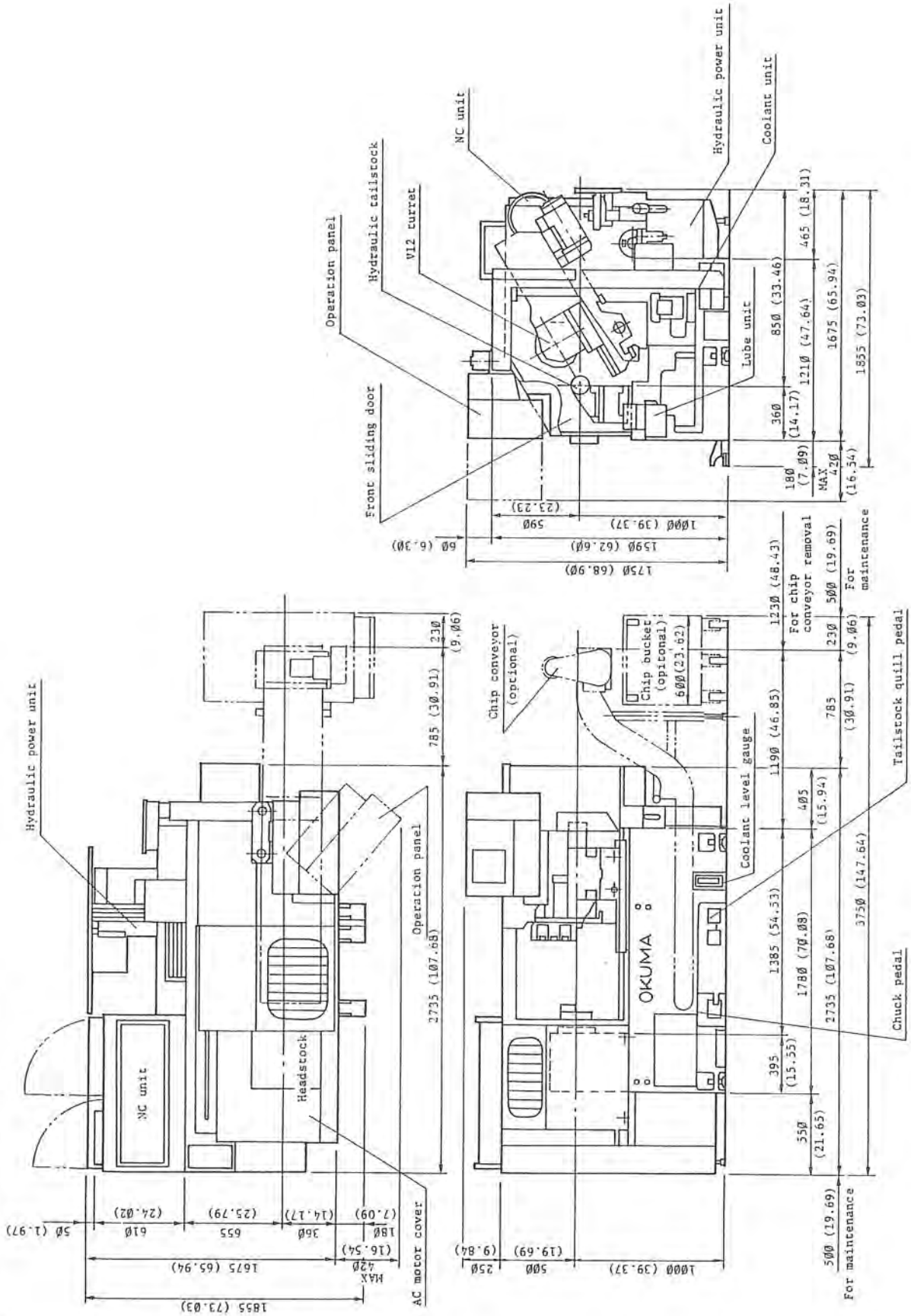

SECTION 3 MACHINE OPERATION

3-1. BEFORE STARTING OPERATIONS

This section deals mainly with the operating procedures of your CNC lathe under manual control. So the information given here is essential to every operator, whether you are new to a CNC lathe or an "old pro."

Follow these three points:

(1) While studying this manual, actually operate the NC lathe by yourself.

(2) Learn the symbols for the numerical control terms.

(3) After you have a general idea of how your NC lathe operates, go to the other sections dealing with the programming and preparation procedures.

For operations of the OSP5000L-G, refer to the operation manual (Publication No. 2446-E).

Caution: Bring the machine to a complete stop by turning off the main switch before operations such as setup or adjustments inside the chip guard are carried out.

3-1-1. NC Operation

Before you begin to operate the machine automatically by tape, make it a rule to check the following points against a process sheet, a program manuscript, or any other chart giving detailed machining instructions:

(1) Setting of hydraulic power chuck jaws and their gripping pressure.

(2) Installation and arrangement of individual cutting tools with respect to their operating sequence.

(3) Positioning of tailstock (when the machine is equipped with tailstock) on bed.

(4) Setting of the maximum spindle speed.

(5) Setting of tool offsets.

(6) Settings of zero offsets.

(7) Settings of feedrate and spindle-speed override to 100%.

(8) Setting of softwired limit positions for each axis.

(9) Positioning of individual slides along respective axes to turret indexing position.

All essential information on the setup and check-up procedures is described in the sections that follow and the operation manual (Publication No. 2446-E).

Items (1) - (4) ... This manual

Items (5) - (9) NC operations ... Operation Manual (Publication No. 2446-E)

3-2. MACHINE OPERATION

3-2-1. Hydraulic Power Unit

(1) Overall View

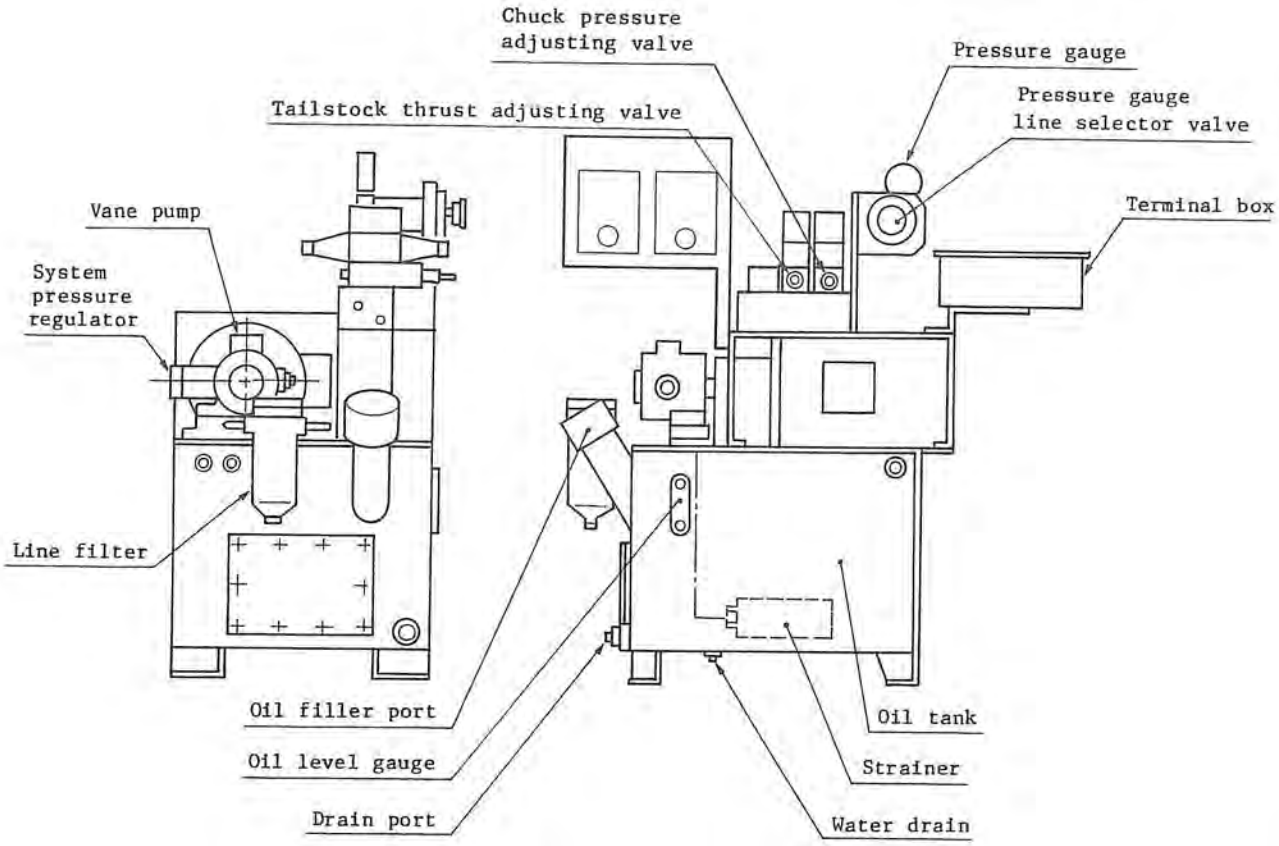

Fig. 3-1

(2) Line Selector Valve for Hydraulic Pressure Indication

The pressure gauge is used to indicate the different levels of hydraulic pressure directed to individual functional units on the machine. The selector valve in used to switch the pressure gauge line.

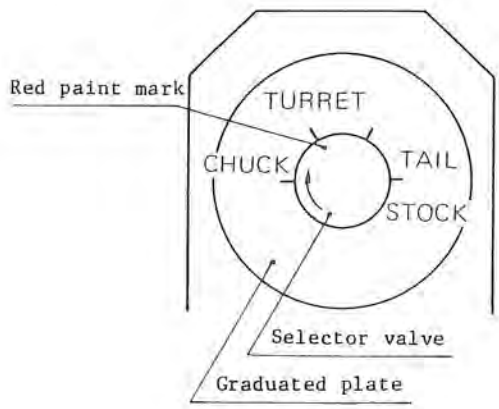

Fig. 3-2

Procedure:

a) Match the red point mark on the knob of the valve with the identification line as shown.

b) Push the valve in.

c) The pressure gauge indicates the setting of oil pressure in the selected pressure line.

The pressure settings are as follows:

Hydraulic power chuck	See Item 3-2-3 (4)
Turret index and clamp	30 kg/cm^2 (427 psi)

(3) Adjustment of Hydraulic Pressure

The following outlines the methods of setting individual functional units for operating pressure. Since the pressure lines for the turret(s) and the disc-type spindle brake have been adjusted at our factory before shipment, they will not require readjustments, during the initial installation and subsequent normal service of the machine.

When readjustment is to be made by your plant personnel, extreme caution must be taken in accordance with the instructions given here to avert any mechanical trouble in the drive lines.

Any necessary adjustment must be make only by authorized personnel, and under all operating conditions, careless tampering must be avoided.

a) Hydraulic Pressure for Power Chuck

Refer to Item 3-2-3 (3).

b) Hydraulic Pressure for Turret Drive (Index and Clamp)

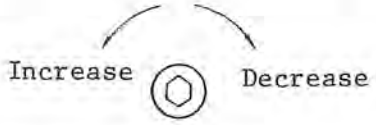

System Pressure Regulator

Readjustment is not required under subsequent normal service of the machine. The turret operates at the same pressure as the system pressure, and therefore the working pressure of oil to the turret is adjusted by means of the system pressure regulator valve installed on the hydraulic power unit.

c) Hydraulic Pressure for Tailstock
(for the model with tailstock)

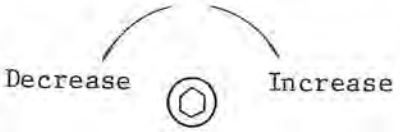

Tailstock Thrust Adjusting Valve

Adjust by turning the valve. (Refer to 3-2-6.)
Allowable maximum pressure is 18 kg/cm^2 (256 psi).

(4) Hydraulic Oil

Recommended Type of Hydraulic Fluid	HL32 (MAS)
Quantity Required	4Ø liters (1Ø.6 U.S. gal.)
Frequency of Servicing	Change after first month of operation and every 6 months thereafter.

Clean the strainer and the tank when changing the oil. Check the pressure for respective actuators.

3-2-2. Selection of Spindle Drive Gear Range

(1) Main Spindle Power Transmission Diagram

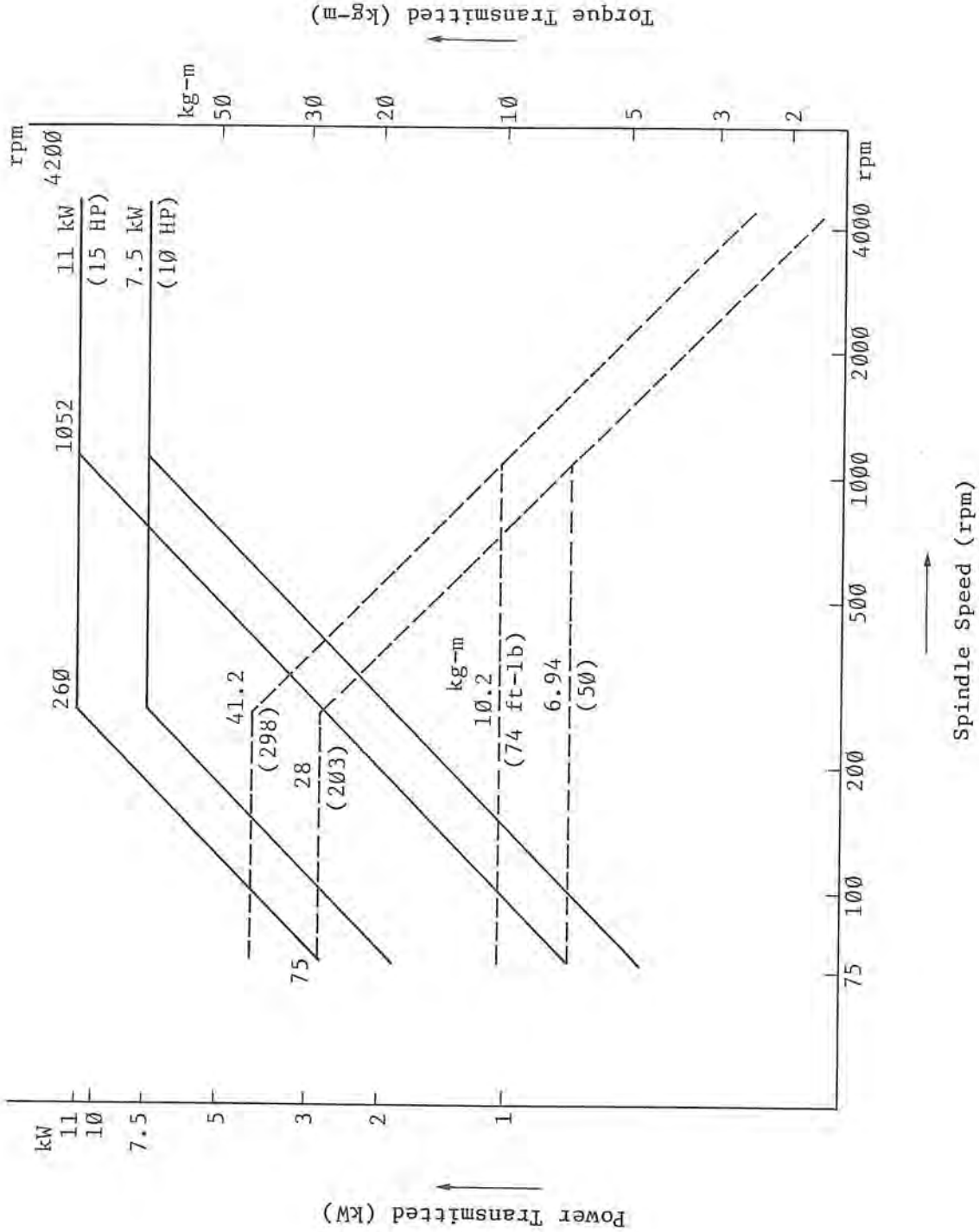

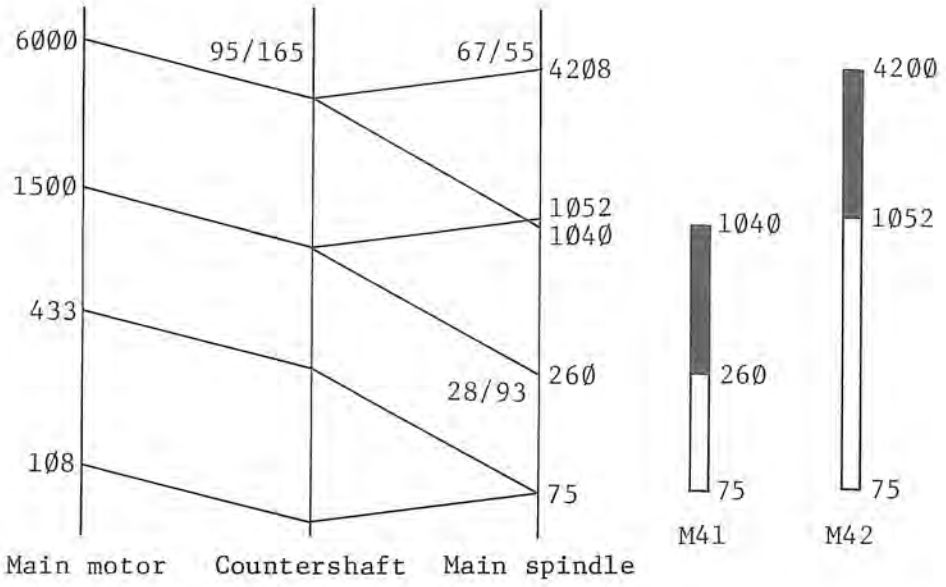

For efficient cutting, it is advisable to use the constant output range of the main motor.

(2) Setting Spindle Jog Speed

The spindle is often required to run at a jog speed such as measuring the runout of the finished workpiece, and stopping the chuck at a definite angular position. Spindle jog speed is set in terms of spindle drive motor speed as needed.

The relationship between the spindle drive motor speed and the spindle speed is shown below.

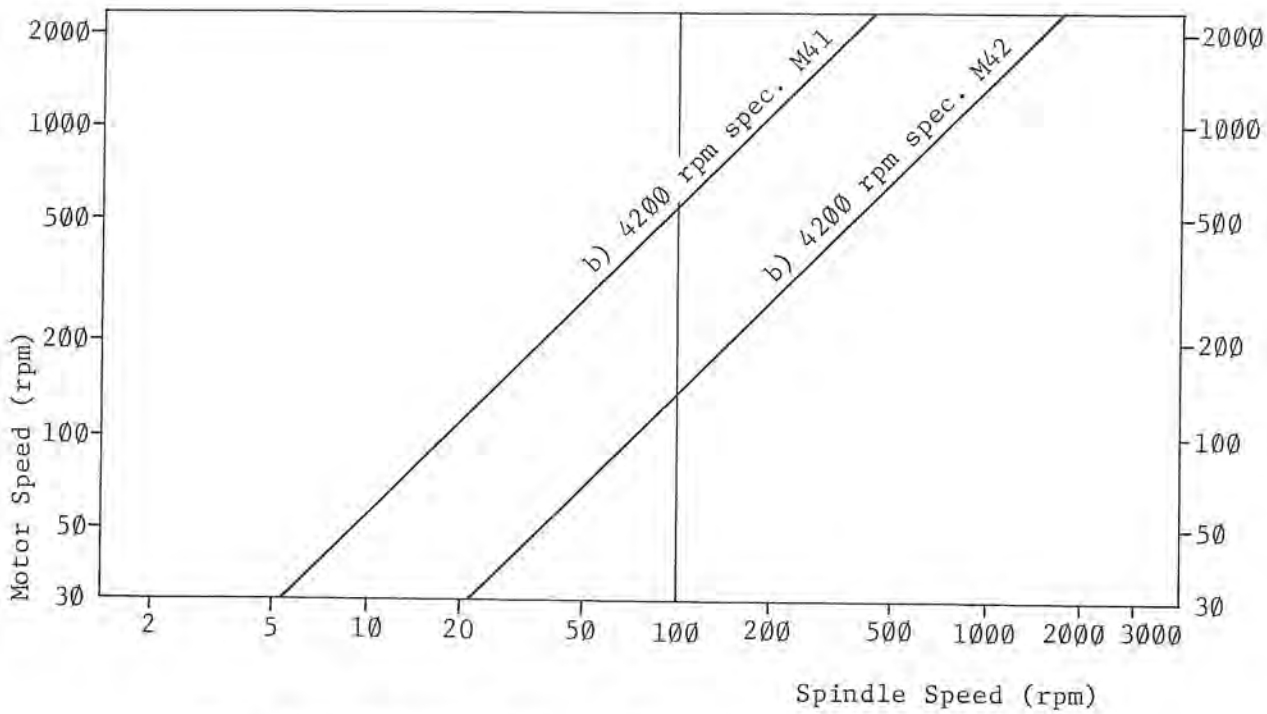

Fig. 3-3 Relation between Motor Speed and Spindle Speed

When changing the jog speed, the motor speed must be between 45 rpm and 2000 rpm.

3-2-3. Hydraulic Power Chuck

(1) Construction

The construction of hydraulic power chuck is shown below.

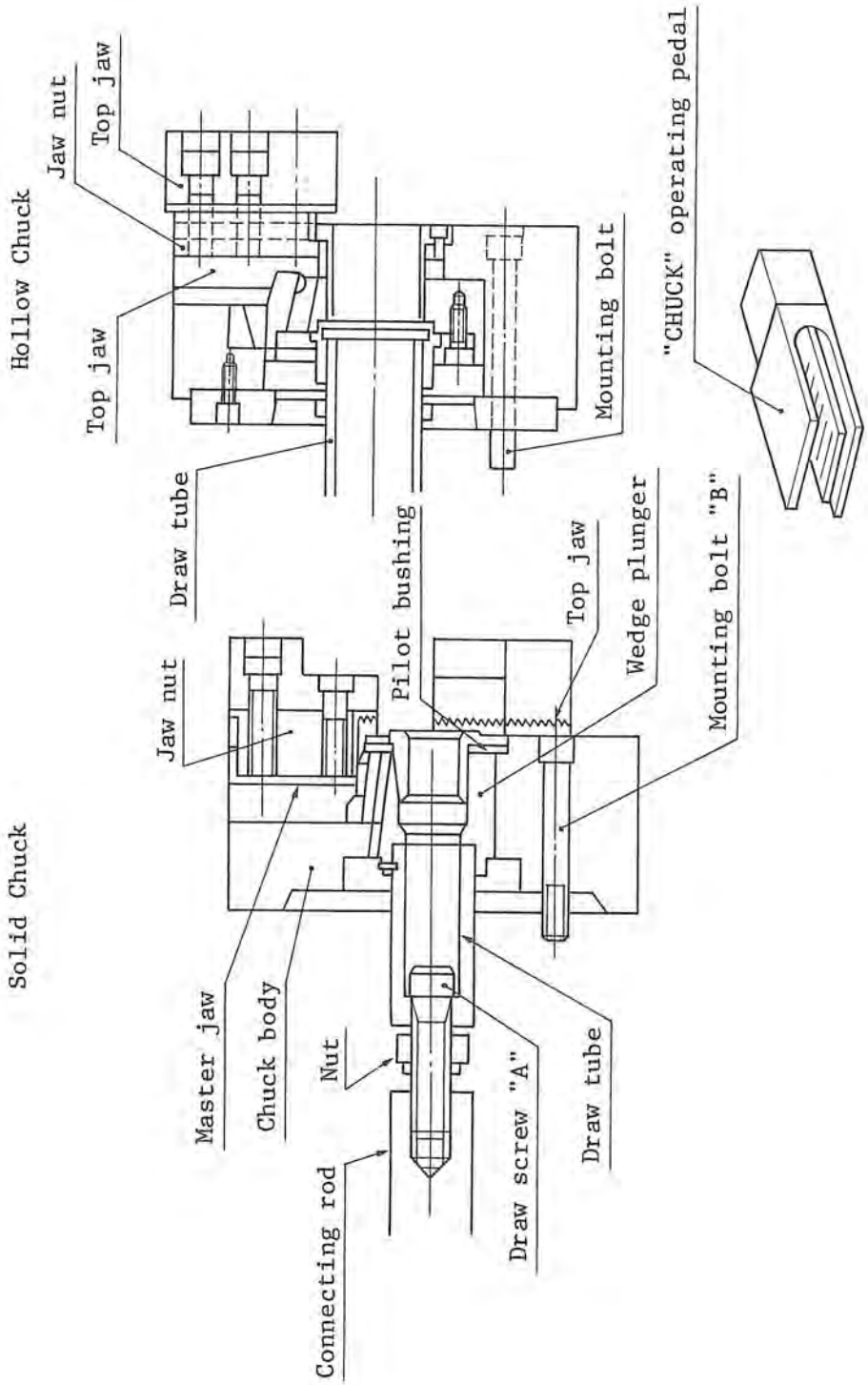

Fig. 3-4

(2) Installation of Power Chuck

Procedure:

a) Press the CONTROL-ON/RESET button on the operation panel to turn on the machine control circuit, and depress the CHUCK operating foot pedal. This causes the connecting rod in the spindle bore to move forward.

b) Fasten the draw screws "A" to the connecting rod. Use the Allen wrench furnished with the machine.

   * Use an Allen wrench provided as a standard service tool.

c) Secure the chuck body onto the spindle end, using mounting bolts "B".

d) Adjust the draw screw "A" so that the outer ends of the master jaws become flush with the peripheral surface of the chuck body when the top jaws are in the "OPEN" condition.

   The individual chuck jaws can be moved in the "opening" direction as the draw screw "A" is turned in a counter-clockwise direction. Removal of the power chuck from the spindle is the reverse of installation in steps from c) to b).

(3) Adjustment of Oil Pressure for Hydraulic Power Chuck

The gripping pressure of the chuck jaws is dependent upon the working pressure of hydraulic fluid which is determined by the setting of the pressure control valve installed on the hydraulic power unit (See 3-2-1).

A clockwise turn of the valve knob increases the working oil pressure directed into the chuck cylinder, and counterclockwise turn decreases it.

(4) Maximum Permissible Spindle Speeds and Oil Pressure Setting

Maximum permissible spindle speed varies depending on types of chuck and cylinder to be used.

See the table below:

Table 3-1 Maximum Spindle Speed and Pressure Setting for Power Chuck

No.	Types and Size	kg/cm^2 (psi)	rpm	Type of Cylinder
1	Hollow type B-Ø8AØ6Ø1A	23 (327)	4,2ØØ	F1546H-Ø1A
2	B-1ØAØ6Ø1A	27 (384)	3,5ØØ	F1546H-Ø1A
3	B-1ØAØ8Ø1B	23 (327)	3,5ØØ	F1768H-Ø1
4	Solid type N-1Ø8AØ6Ø1	27 (384)	4,ØØØ	Y-1225HE
5	N-1ØAØ6Ø1	29 (412)	3,5ØØ	Y-1225HE
6				

Note: This table indicates the permissible spindle speed for standard chuck. If a chuck other than those indicated above is used, follow the instruction beared on the name plate at the front cover of the machine.

(5) How to Set Maximum Spindle Speed

The maximum spindle speed to which spindle speed is to be limited due to chuck specifications, influence of centrifugal force on chuck gripping force, imbalance of workpiece, etc. can be set by program.

Format

G50 Soooo — To be specified in a block without other commands

Soooo: Specify the required maximum spindle speed

Programmed maximum spindle speed is effective until another spindle speed is designated.

(6) Power Chuck Clamping Force Characteristics Diagram

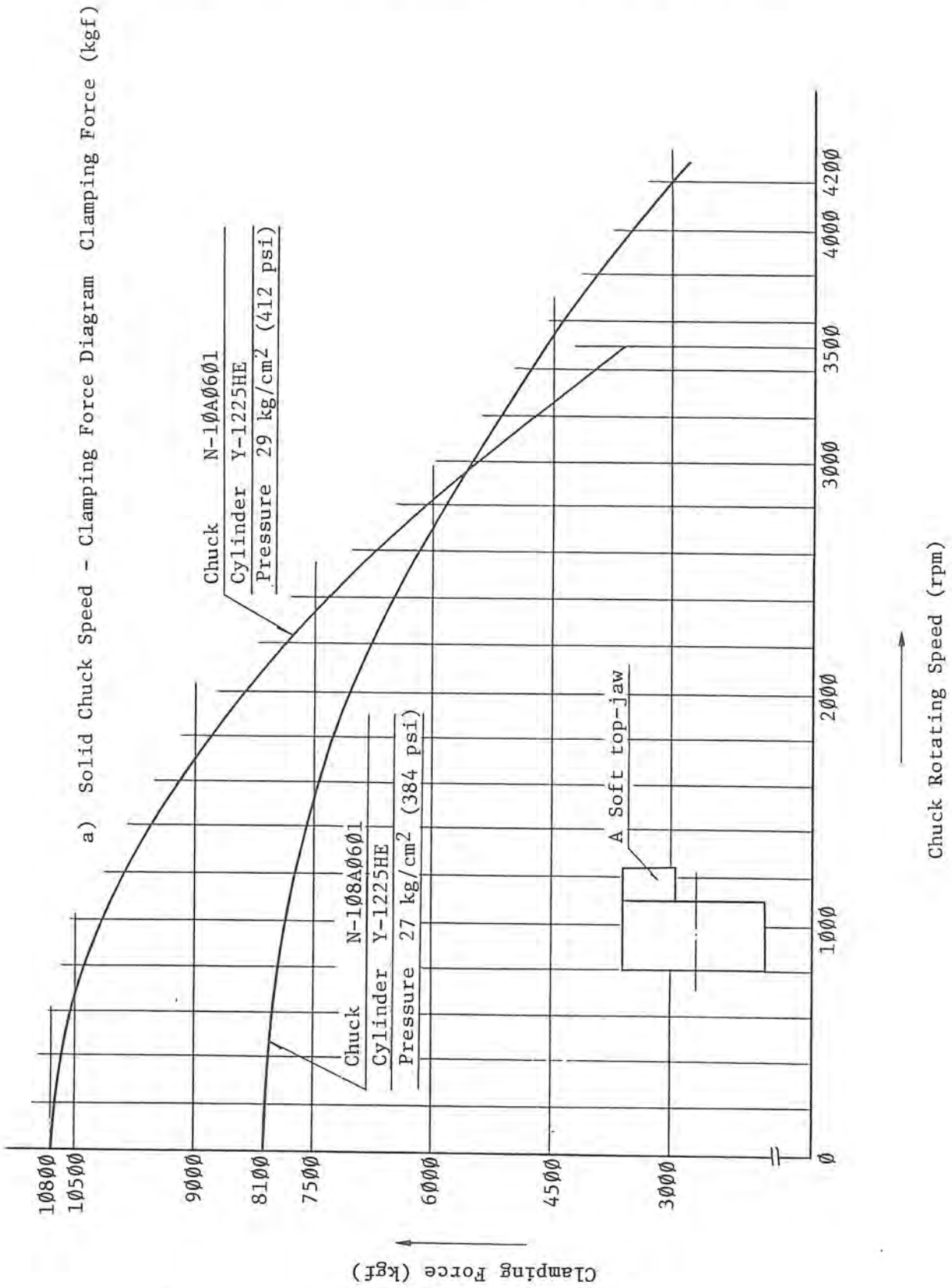

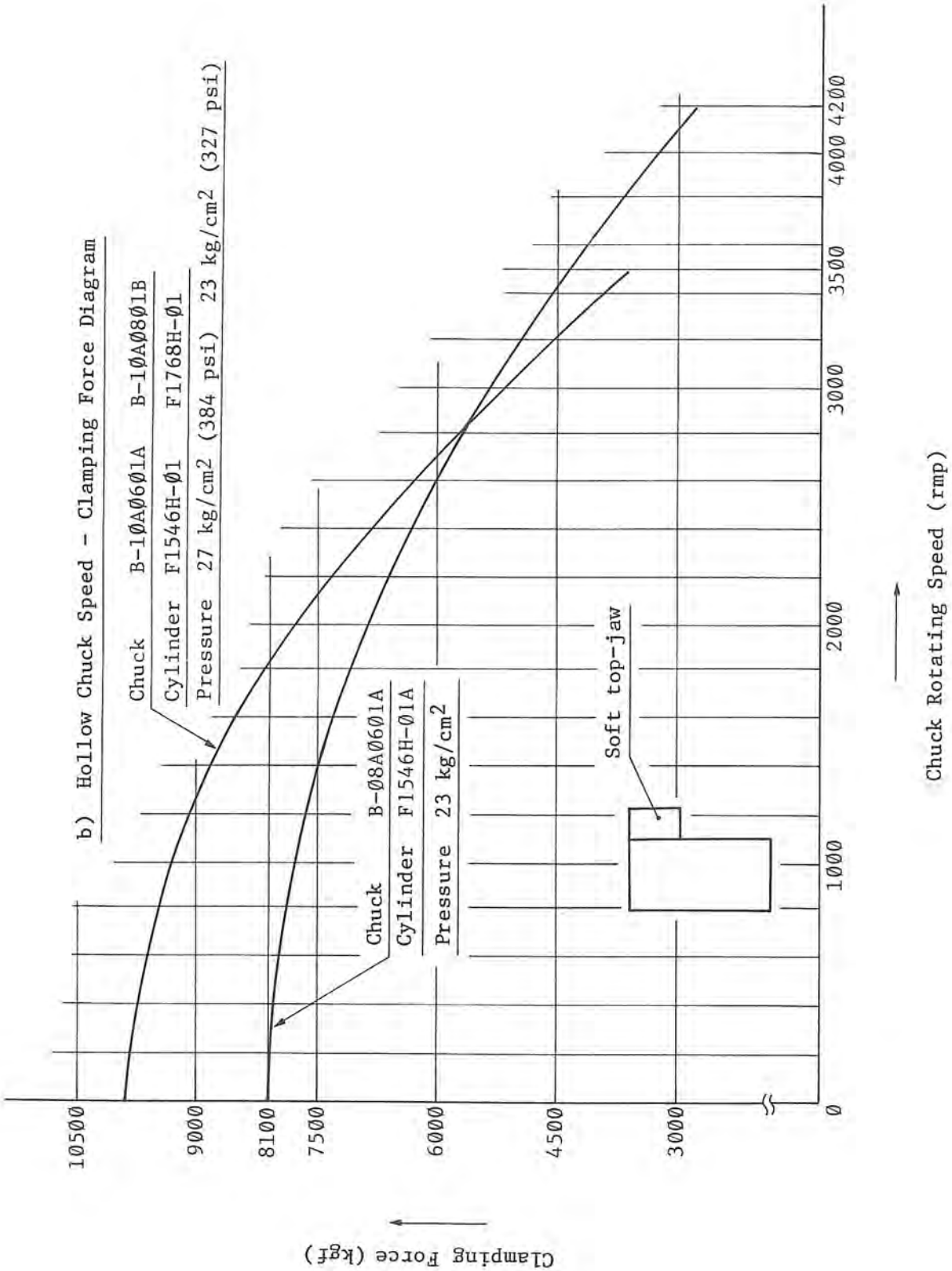
b) Hollow Chuck Speed - Clamping Force Diagram
Chuck B-1ØAØ6Ø1A B-1ØAØ8Ø1B
Cylinder F1546H-Ø1 F1768H-Ø1
Pressure 27 kg/cm2 (384 psi) 23 kg/cm2 (327 psi)
Chuck B-ØØ8AØ6Ø1A
Cylinder F1546H-Ø1A
Pressure 23 kg/cm2
Soft top-jaw
10500
9000
8100
7500
6000
4500
3000
0
1000
2000
3000
3500
4000 4200
Clamping Force (kgf)
Chuck Rotating Speed (rmp)

(7) General Precaution for Hydraulic Power chuck

In order to insure maximum safety in operation, the following points call for your special notice:

a) Select the right chuck that matches the machine's capacity.

b) Relationship between Spindle Speed and Chuck Gripping Force

The workpiece must be clamped in the chuck without unbalance. In addition, since chuck gripping force varies in accordance with the spindle rpm, select the cutting conditions to ensure safe operations referring to the diagrams in Item (6) on pp. 18 and 19.

The maximum spindle RPM and maximum allowable pressure limit (maximum setting) are indicated on the instruction plate attached to the front of the chip guard.

The maximum spindle RPM refers to the speed at which the chuck can be turned, with its gripping force maintained more than one-third of its rating, while the outer ends of the individual top jaws are positioned evenly with the peripheral surface of the body.

c) When soft top jaws larger than standard ones provided with the machine are prepared by the customer and used with the chuck, keep in mind that developing centrifugal force and decreasing efficiency may reduce the actual gripping force. Be sure to reduce the spindle RPM accordingly.

d) Where jaw nuts shown below go beyond the peripheral surface of the body, only one bolt secures the corresponding jaw and a very dangerous condition is created. Always locate the jaw nuts within the periphery of the body as shown below. It is a good and safe practice to use soft top jaws that are made to fit the actual work configuration.

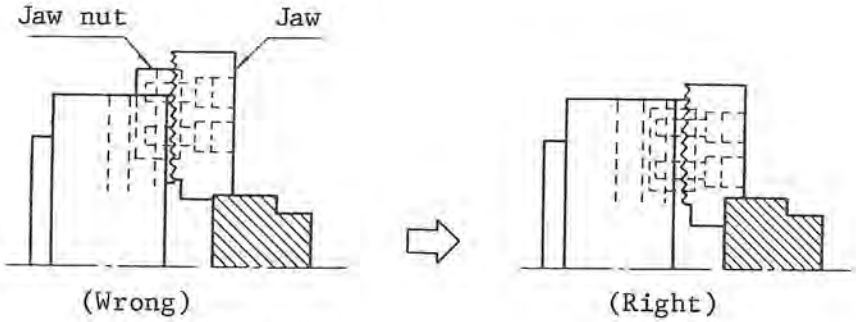

Fig. 3-5

e) BEFORE STARTING SPINDLE ROTATION, BE SURE TO PLACE THE FRONT DOOR.

(8) Change of Chuck Gripping Direction - ID/OD Gripping

Gripping direction of the hydraulic power check - ID gripping and OD gripping - can be changed by setting proper parameter data.

The change of gripping direction may be made only while the spindle stops.

(9) Greasing

The chuck has grease nipple either on the chuck front face or on its periphery. Apply grease (XM2, MAS) to the nipples everyday.

Since chips and foreign matter accumulate on the jaw moving surfaces on the chuck, clean them every day and lubricated them with hydraulic oil (HG68, MAS).

3-2-4. Cutting Soft Top Blanks of Power Chuck

There are three different methods applied in cutting soft top blanks of chuck jaws for chucking a particular lot of parts.

(1) by pulse feed handwheel
(2) by manual data input (MDI)
(3) by tape

They are all basically the same operation, and it is advisable to use tape or manual data input when a good finish on the chucking surfaces on the jaws is essential.

Now let's explain the steps necessary to produce top jaws for chucking a diameter of 7Ø mm (2.75 in.) with a depth of 15 mm (Ø.6 in.) by manual data input.

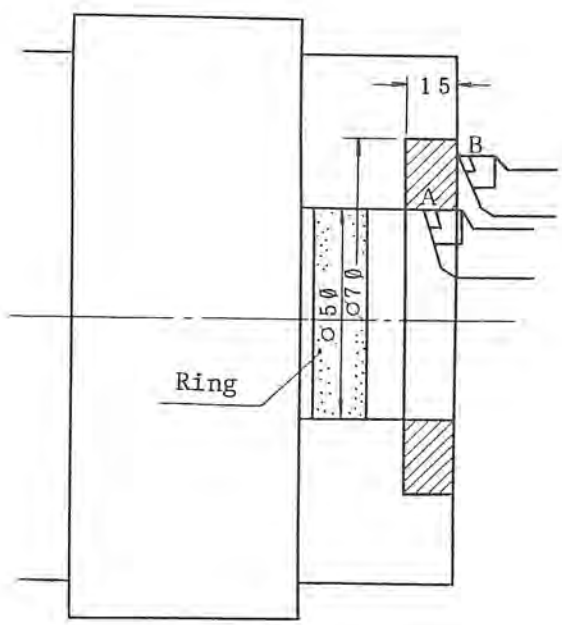

Fig. 3-6

Procedure:

(1) Grip a ring of proper diameter, 50 mm (2 in.), for instance in the chuck.

(2) Locate the tool tip point at point A and set the zero offset value so that the absolute position of X axis is equivalent to the ring diameter, 50 mm (2 in.) in this case.

Absolute Position: X = 50.000 mm
(X = 2.0000 in.)

(3) Locate the to tip point at point B and set the zero offset value so that the absolute position of Z axis is equivalent to the required chucking depth of length; 15 mm (0.6 in.) in this case.

Absolute Position: Z = 15 mm
(Z = 0.6000 in.)

(4) Proceed with cutting by entering the following commands block by block.

In the example, the depth of cut is 5 mm (0.2 in.) and the feedrate is 0.1 mm/rev. (0.004 ipr).

For 2-saddle model

```
(G13 or G14)

G00     X60000    Z18000              S0o0M41    M03
G01               Z  100     F100
G00     X58000    Z18000
        X69600
G01               Z  100
G00     X67000    Z18000
        X70000
G01               Z    0
        X48000
G00               Z500000                         M05
```

3-2-5. Tool Setting

Supplied together with the machine, the special tool setting caliper is used to set individual cutting tools and holders on the machine.

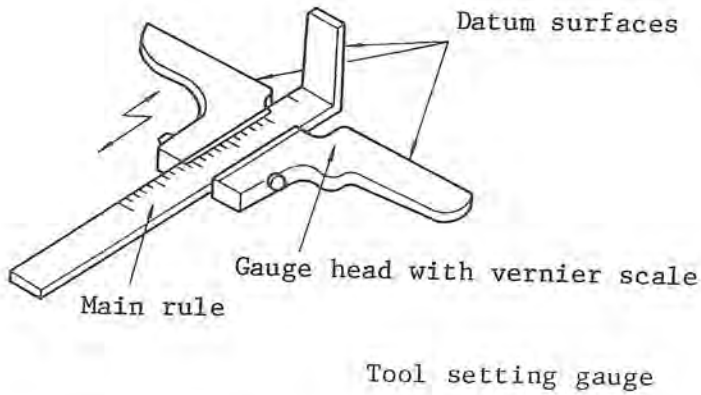

Fig. 3-7 Tool Setting Caliper

Design:

The caliper consists of the gauge head which has a slot to accommodate a narrow main rule. With a total of three finished datum surfaces provided, the gauge is designed on the same principle as a caliper unit

The main rule is graduated up to 150 mm (6 in.) and may be used to make measurements of the amount of tool projection from 0 to 150 mm (6 in.)

How to Use The Tool Setting Caliper:

Take the reading with the datum surface held flush against the datum surface of the toolholder and the cutting tool or usually the tool point.

Measurements are made from the amount of tool projection for both X and Z axes. The amount of tool projection is the distance from the datum surface of the toolholder to the point of the cutting tool.

Example of Cutting Tool Holders and Caliper Settings

(1) OD Turret

X: Tool offset value on X-axis
Z: Tool offset value on Z-axis
A: Tool setting gauge reading

Standard Tool

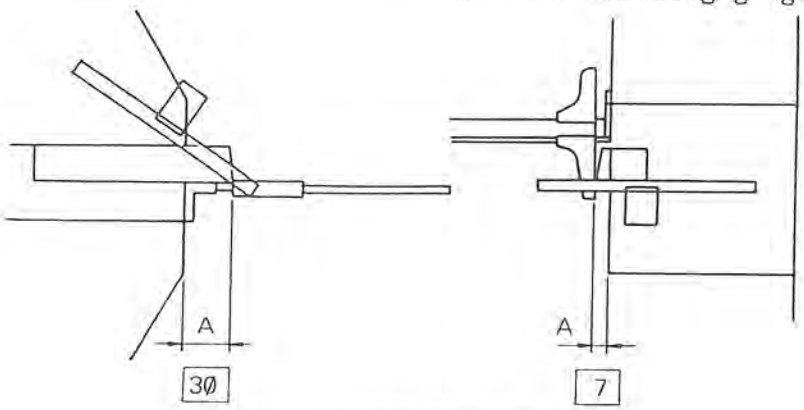

X = + 2 (A − 30) mm
Z = A − 7 mm

Fig. 3-8

Inverted Tool

X: Tool offset value on X-axis is the same as that of standard tool

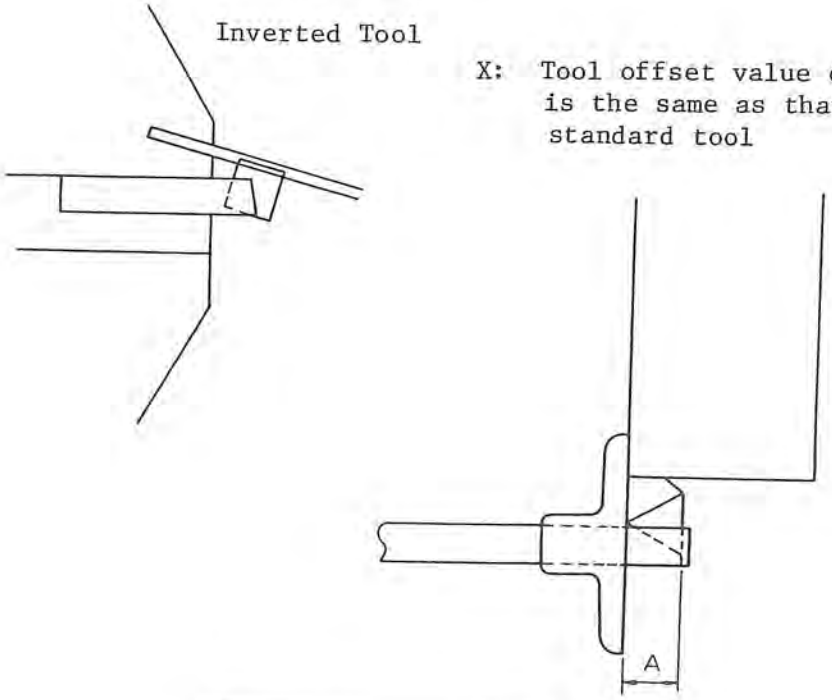

X = + 2 (A − 30) mm
Z = − (A + 7) mm

Fig. 3-9

(2) OD Toolholder, Type I

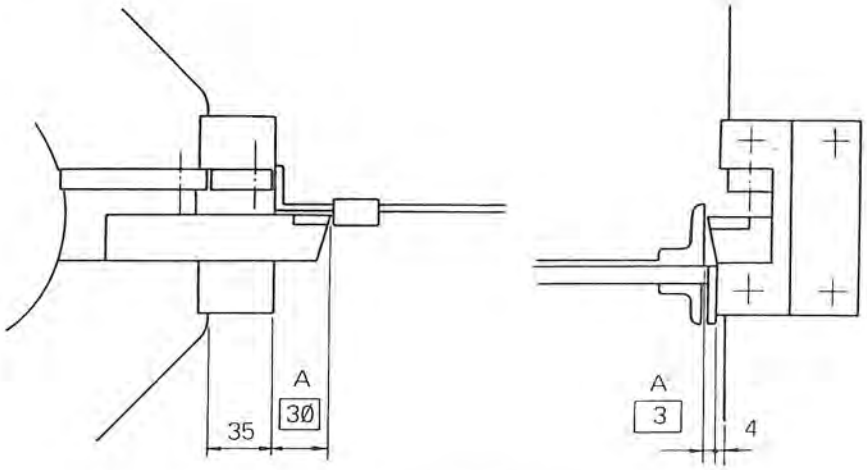

X = 2(A + 5) mm
Z = A - 3 mm

Fig. 3-10

(3) OD Toolholder, Type II

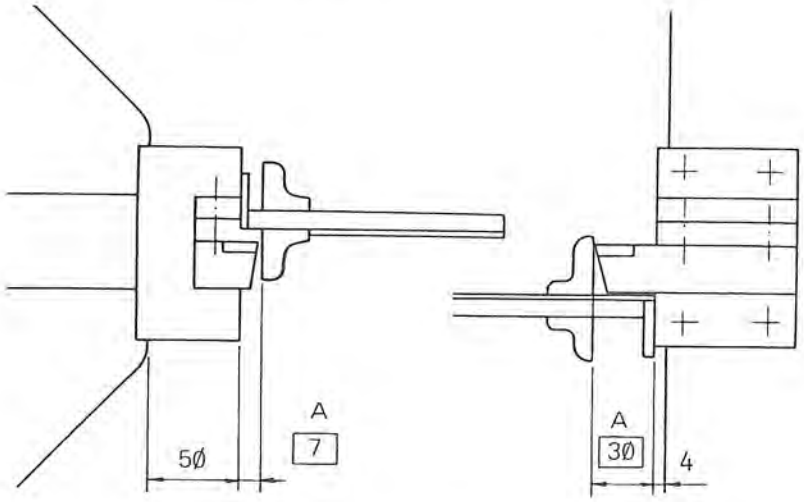

X = 2(A + 20) mm
Z = A - 3 mm

Fig. 3-11

(4) ID Toolholder

X: Tool offset value on X-axis
Z: Tool offset value on Z-axis
A: Tool seting gauge reading

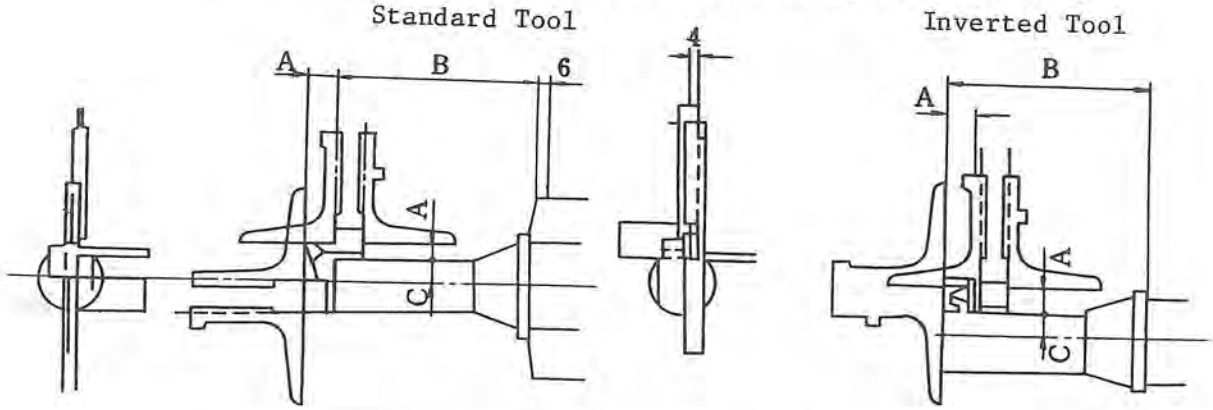

X = − 2 x (A + C) mm
Z = A + B − 1 mm

X = − 2 x (A + C) mm
Z = B − A − 1 mm

Fig. 3-12

(5) Boring bar

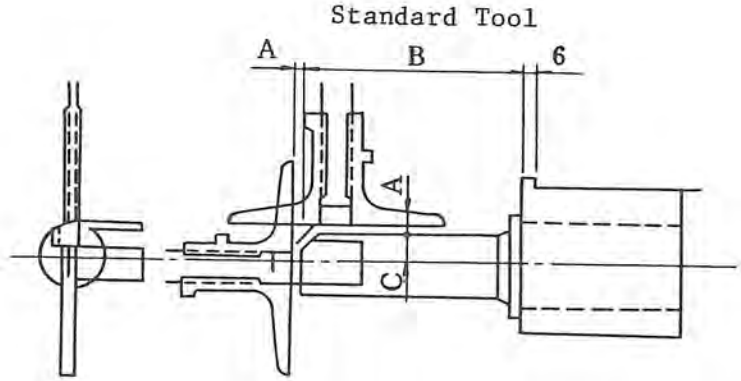

X = − 2 x (A + C) mm
Z = A + B − 1 mm

Fig. 3-13

(6) Drill sleeve

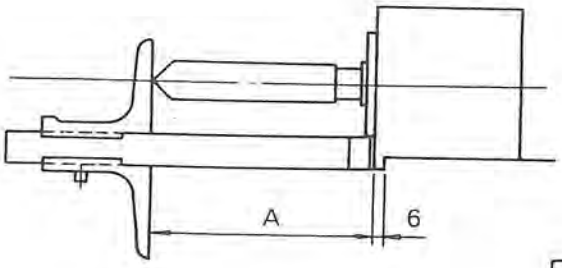

X = Ø
Z = A − 1 mm

Fig. 3-14

3-2-6. Hydraulic Tailstock Operation

(1) Setting the position of tailstock body

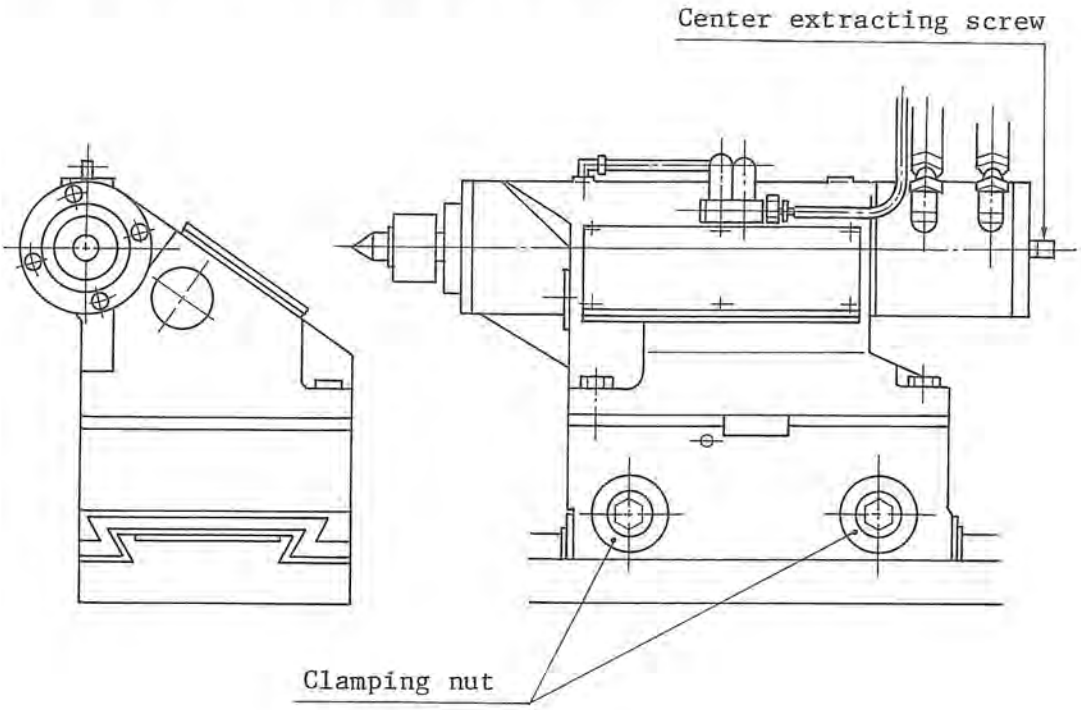

Fig. 3-15

a) Setting the position of tailstock body

After loosening the two clamping nuts, move the tailstock body to the desired position. Then secure these two nuts tight to clamp the tailstock body against the bed way.

b) Adjusting tailstock thrust

Tailstock thrust can be adjusted by the thrust adjusting valve on the hydraulic power unit. The maximum hydraulic pressure for tailstock thrust is 18 kg/cm^2 (256 psi) and the thrust with such pressure setting is 500 kg (1100 lbs.). For details, refer to 3-2-1 (3).

Note that the tailstock thrust largely affects the service life of the main spindle; do not set thrust unnecessarily high.

Relation between Hydraulic Oil Pressure and Tailstock Thrust

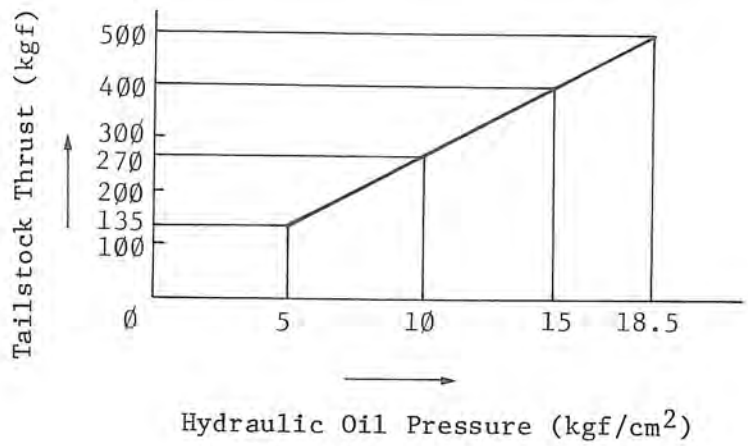

c) Advancing/Retracting Tailstock Sleeve

Advance and retraction of the tailstock sleeve can be performed by the foot-operated pedal switches located at the front of the machine.

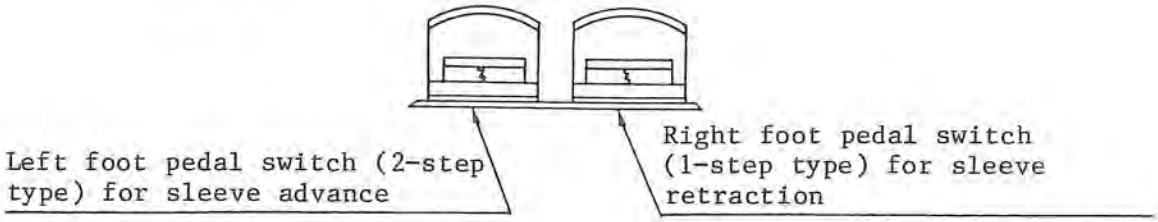

Fig. 3-16

1) Left pedal switch (2-step type) is used to advance the sleeve.

   First slight-depress of pedal:
   The Sleeve advances while the pedal is depressed.

   Second full-depress of pedal:
   When depressed fully, the sleeve advances up to the stroke end.

2) Right pedal switch (1-step type) is used to retract the sleeve. When depressed, the sleeve retracts up to the stroke end.

d) Center-work/Chuck-work selector switch

The tailstock setup (for center-work: tailstock is used, for chuck-work: tailstock is not used) condition should be set to the corresponding parameter.

Center-work: The tailstock sleeve operation (advance/retract) is controlled by the foot pedal switch.

The spindle can rotate only when the left foot pedal switch is fully depressed.

Chuck-work: The tailstock sleeve operation (advance/retract) is not controllable.

The spindle can rotate only when the tailstock sleeve is located at the retract end.

e) Allowable load and life span of revolving center

Allowable load and life span of standard revolving center MT No. 5 are shown in the table below. Keep the load limit for your applications.

Allowable Load Table (kg)

Load type / Speed (rpm)	Radial	Thrust
500	640	480
1,000	600	380
1,500	530	330
2,000	490	300
2,500	460	280
3,000	430	260
3,500	410	250
4,200	390	240

Thrust Bearing Life Chart

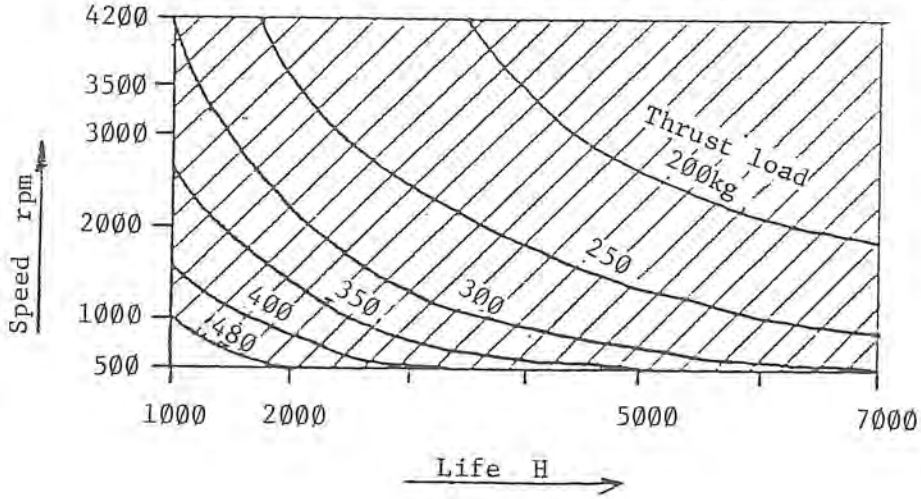

Tailstock Sleeve Advance/Retraction Positon Confirmation Device

Adjusting Procedure

(1) Move the dog rightward.

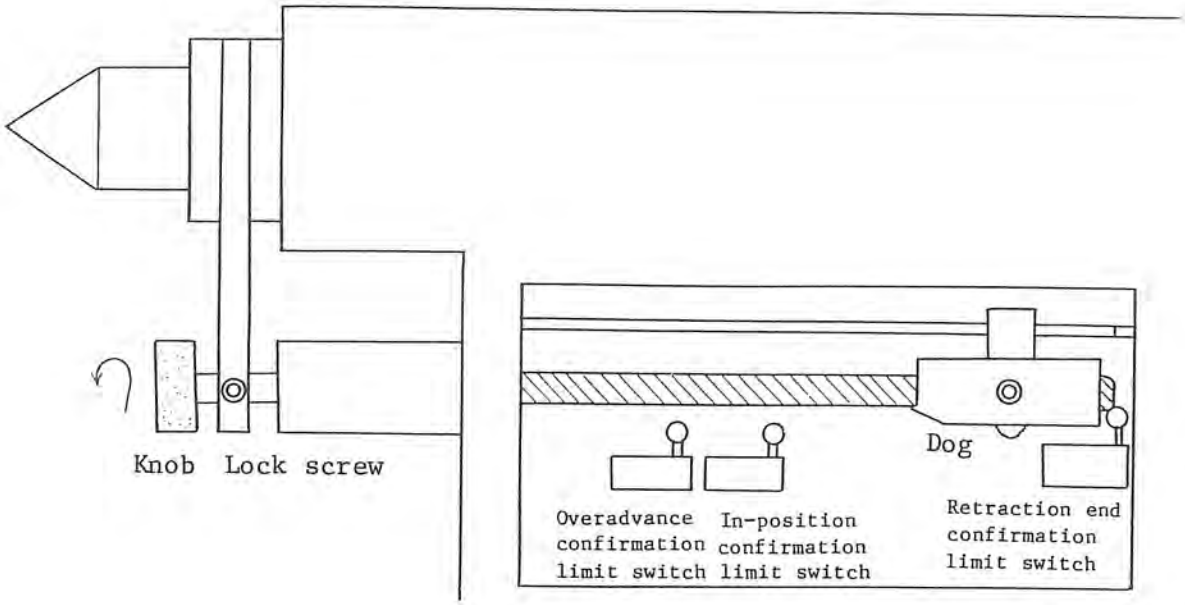

Fig.3-17

a) Loosen the lock screw.

b) Turn the knob counterclockwise.

c) The dog then moves rightward.

(2) Advance the tailstock sleeve as desired and reposition the tailstock body by stepping the pedal to the 2nd position so that the center touches the workpiece.

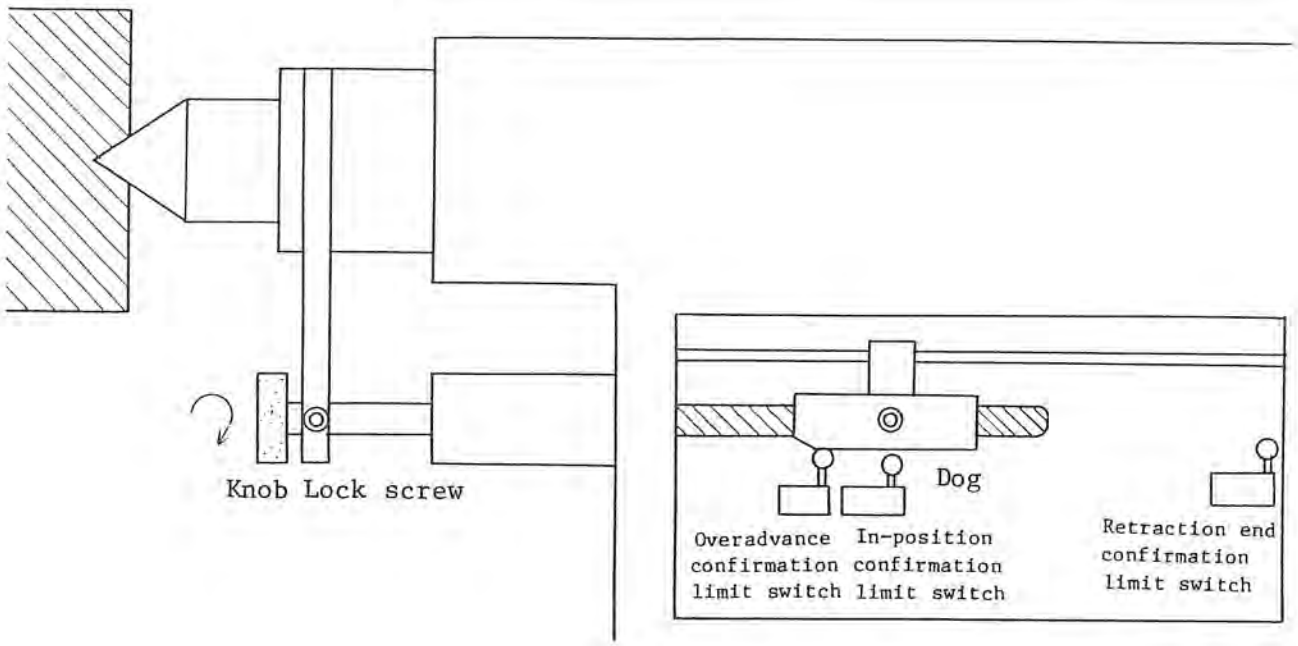

Fig. 3-18

a) Turn the knob clockwise with the workpiece pressed by the tailstock sleeve.

b) The dog moves leftward. First locate the dog at the position where the dog presses both of the limit-switch plungers--overadvance limit-switch and in-position limit-switch. Further turn the knob about two turns from that point.

c) Secure the lock screw.

d) Confirmation whether the limit switch actuated or not can be checked on the CRT display as detailed in (4) below.

(3) In case workpiece length varies, adjust the dog position by turning the knob: clockwise for longer workpiece and counterclockwise for shorter workpiece.

(4) Checking correct position

Correct position ..... Both of the overadvance and in-position limit switches have been actuated.

a) After selecting any of AUTO, MDI and MANUAL modes, press the function key [F7] (CHECK).

b) Press the function key [F5] (PAGE) several times, and the CRT displays EC INPUT Ø1 page.

c) See explanation of EC INPUT Ø1 data page signal coding provided in the following page.

Bit 4 and bit 3 of No. 6 indicates the operation status of the relating limit switches--tailstock sleeve in-position confirmation and tailstock sleeve overadvance confirmation, respectively.

"1" indicates ON and "Ø" indicates "OFF".

d) When both bit 4 and bit 3 are "1", it indicates that both of the in-position and the overadvance confirmation limit switches are actuated and the tailstock sleeve is located in position.

EC Input Status (No. 1)

Check Column — Data Code

AUTO OPERATION A-TURRET A.MIN 00001 N 1

CHECK DATA EC INPUT 01: A-TURRET METRIC

№	data	bit7	bit6	bit5	bit4	bit3	bit2	bit1	bit0
1	10000100	TCLA	CPA/	OPA/	OFA	TLAC	TLAB	TLAA	TLA9
2	01001011	TLA8	TLA7	TLA6	TLA5	TLA4	TLA3	TLA2	TLA1
3	11111111	TCLB	CHP2	CHP1	SPL5	SPL4	SPL3	SRL2	SPL1
4	00110111	TLB8	TLB7	TLB6	TLB5	TLB4	TLB3	TLB2	TLB1
5	10001001	SSR/	TSP/	STR	RST	DROP	SOA/	BOF	BOL
6	01100101	CCC2	CCC1	TSRT	TSLM	TSOA	TSKF	TSA2	TSA1
7	00000001	IN24	IN28	SCSP	ALM/	CFA	SEA/	LOA/	LA
8	11100000	SBA/	SLA/	SAI	TMA/	OMA/	OLA/	CBA/	ECON
9	00000001	OIL/	IILC	TLXF	TLZF	SRZ	SPC	CHOP	CHCL
10	00000000								
11	00000000	IDC/	TSP/	DROP	DRCL	CDA/	CDM	MANS	ESJN
12	00000000								ESUE

F1	F2	F3	F4	F5	F6	F7	F8
PROGRAM SELECT	ACTUAL POSIT	PART PROGRAM	BLOCK DATA	PAGE	TURRET	CHECK DATA	[EXTEND]

F1 F2 F3 F4 F5 F6 F7 F8

0: OFF
(LS not tripped)

1: ON
(LS tripped)

No. \ bit	bit 7	bit 6	bit 5	bit 4	bit 3	bit 2	bit 1	bit 0
1	Turret A Clamp	Chuck Pressure Low	Hydraulic Source Pressure Low/	Alarm - Oil Filter Clogged	← Rotary Switch - Turret A, #9 through #12 →			
2	← Rotary Switch - Turret A, #1 through #8 →							
3	Turret B Clamp	Chuck Pedal #2	Chuck Pedal #1	← Spindle Gear Confirmation			Limit Switch →	
4	← Rotary Switch - Turret B, #1 through #8 →							
5	External Cycle Stop/	External Slide Hold/	External Cycle Start	External Reset	Door Open Confirmation Switch	Spindle Lubrication Pressure Low/	Slideway Lube Oil Flow	Slideway Lube Oil Level
6	Chip Cover Close Confirmation Switch 2	Chip Cover Close Confirmation Switch 1	Tailstock Quill Retraction Confirmation Switch	Tailstock Quill Inposition Confirmation Switch	Tailstock Quill Overadvance Confirmation Switch	Tailstock Quill Retraction Foot Switch	Tailstock Quill Advance Foot Switch 2	Tailstock Quill Advance Foot Switch 1
7	External Input 24	External Input 28	Spindle Orientation Completion/	External Alarm/		Alarm - Travel End	Alarm - LDU Overload/	Alarm - LDU
8	Alarm - Spindle Brush Wear/	Alarm - Spindle Overload/	Alarm - SIXI/	Alarm - CPU Temperature/	Alarm - Transformer Overheat/	Alarm - EC Overload/	Alarm - EC Circuit Breaker	EC Power ON
9	External Interlock/	Internal Interlock Released	Turret X-axis Free	Turret Z-axis Free	Spindle Zero Speed	Spindle at Constant Speed	Chuck Open Confirmation Switch	Chuck Close Confirmation Switch
10								
11	Index Chuck Completion Limit/	Sensor Protect Limit/	Door Open	Door Close	Coupling Device Alarm/	Interlock Mode	Answer for Aux. M Code	External Spindle Jog
12								External Start Disabled

Note: Contents of signals and CRT display might vary depending on machine models and specifications.

```
AUTO OPERATION        A-TURRET   A.MIN  O0001   N          1
CHECK DATA              EC INPUT 02:            A-TURRET METRIC
    No.            bit7  bit6  bit5  bit4  bit3  bit2  bit1  bit0
    13   00000000  TSUC  TSCL  JNCC  M44   M43   M42   M41   M40
    14   00100110  IN18  IN17  IN16  IN15  IN14  IN13  IN12  IN11
    15   00000000                    CDOP  SHC/  SHMP  SHMP  SHSP
    16   00000000  MST1  MDC1              SL14  SL13  SL12  SL11
    17   00000000                    OK1   +OK1  -OK1  +NG1  -NG1
    18   00000000  MST2  MDC2              SL24  SL23  SL22  SL21
    19   00000000                    OK2   +OK2  -OK2  +NG2  -NG2
    20   00000000
    21   00000000
    22   00000000
    23   00000000
    24   00000000

 F1        F2        F3        F4        F5        F6        F7        F8
PROGRAM   ACTUAL    PART      BLOCK     PAGE      TURRET    CHECK     [EXTEND]
SELECT    POSIT     PROGRAM   DATA                          DATA

F1 F2 F3 F4 F5 F6 F7 F8
```

No. \ bit	bit 7	bit 6	bit 5	bit 4	bit 3	bit 2	bit 1	bit 0
13	Tailstock Joint ON	Tailstock Joint OFF	Spindle Jog Reverse	← Spindle Speed Range →				
				M44	M43	M42	M41	M40
14	External Input 18	External Input 17	External Input 16	External Input 15	External Input 14	External Input 13	External Input 12	External Input 11
15				Coupling Device Retraction Position	Optical Sensor Workpiece Detect	Sensor Head Advance Position	Sensor Head Interme-diate Position	Sensor Head Retraction Position
16	Gauging Start	Gauging Data Clear			← Switching Signal →			
17				← Judging Signal →				
18	Gauging Start	Gauging Data Clear			← Switching Signal →			
19				← Judging Signal →				
20								
21								
22								
23								
24								

Note: Contents of signals and CRT display might vary depending on machine models and specifications.

3-2-7. After Completion of A Day's Operation

(1) Press the CONTROL-OFF button on the operation panel.

(2) Turn the main switch on the control cabinet to OFF.

(3) Clean the machine and keep the surrounding area neat and in order.

3-2-8. Manually Operated Chuck (Four Jaw Independent Chuck (Kitagawa))

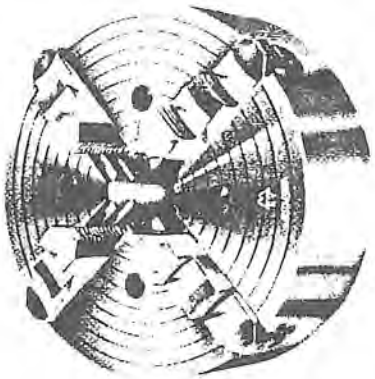

(1) Inspection

Check the model name indicted on the chuck body, possible damages during transportation, and accessories.

(2) Standards

The four-jaw independent chucks (Kitagawa) are manufactured in strict adherence to the standards stipulated in JIS B6154 (Independent chucks). The standards applied in manufacturing and inspection of the chucks are provided on the following pages.

Type IC

Unit: mm (in.)

Type IC inch	Type IC mm	Maximum Chucking Diameter ID Chucking	Maximum Chucking Diameter OD Chucking	Run-out of Chuck Body Circumference and Front Face	Adaptor Installation Section Dimensions		Bolts P.C.D	Bolts No. of Bolts x Bolt Size
4	100	40 (1.57)	90 (3.54)	Within 0.030 (0.00118)	75 (2.95)	+0.030 (0.00118) 0	86 (3.39)	4-M8
6	150	60 (2.36)	140 (5.51)		130 (5.12)	+0.040 (0.00157)	115 (4.53)	4-M10
8	200	75 (2.95)	185 (7.28)		175 (6.88)	0	155 (6.10)	4-M12
10	250	95 (3.74)	220 (8.66)		150 (5.91)		125 (4.92)	4-M12
12	300	125 (4.92)	265 (10.43)		170 (6.69)		140 (5.51)	4-M12
14	350	155 (6.10)	310 (12.20)	Within 0.035 (0.00138)	190 (7.48)	+0.046 (0.00181)	160 (6.30)	4-M12
16	400	190 (7.48)	360 (14.17)		210 (8.27)	0	180 (7.09)	4-M16
18	450	220 (8.66)	405 (15.94)		230 (9.06)		200 (7.87)	4-M16
20	500	250 (9.84)	450 (17.72)	Within 0.040 (0.00157)	250 (9.84)		220 (8.66)	4-M16
22	550	290 (11.42)	500 (19.69)		275 (10.83)	+0.052 (0.00205)	240 (9.45)	4-M20
24	600	320 (12.60)	550 (21.65)		300 (11.81)	0	260 (10.24)	4-M20
26	660	370 (14.57)	610 (24.02)	Within 0.045 (0.00177)	325 (12.80)	+0.089 (0.00350)	275 (10.83)	8-M26
28	710	385 (15.16)	650 (25.59)		350 (13.78)	0	300 (11.81)	8-M20
30	762	435 (17.13)	700 (27.56)		375 (14.76)		325 (12.80)	8-M20
32	813	485 (19.09)	750 (29.53)	Within 0.050 (0.00197)	400 (15.75)		350 (13.78)	8-M20
36	915	555 (21.85)	850 (33.46)		450 (17.72)	+0.097 (0.00382)	400 (15.75)	8-M24
40	1000	630 (24.80)	940 (37.01)	Within 0.060 (0.00236)	500 (19.69)	0	450 (17.72)	8-M24

IA Type

Unit: mm (in.)

Spindle Nose	Type	Maximum Chucking Diameter		Run-out of Chuck Body Circumference and Front Face
	IA Type	ID Chucking	OD Chucking	
A-5	IA5-200	75 (2.95)	185 (7.28)	Within 0.030 (0.00118)
	IA5-250	95 (3.74)	220 (8.66)	
	IA5-300	125 (4.92)	265 (10.43)	
A-6	IA6-205	75 (2.95)	185 (7.28)	
	IA6-250	95 (3.74)	220 (8.66)	
	IA6-300	125 (4.92)	265 (10.43)	
	IA6-350	155 (6.10)	310 (12.20)	Within 0.035 (0.00138)
	IA6-400	190 (7.48)	360 (14.17)	
	IA6-450	220 (8.66)	405 (15.94)	
	IA6-500	250 (9.84)	450 (17.72)	Within 0.040 (0.00157)
A-8	IA8-250	95 (3.74)	220 (8.66)	Within 0.030 (0.00118)
	IA8-300	125 (4.92)	265 (10.43)	
	IA8-350	155 (6.10)	310 (12.20)	Within 0.035 (0.00138)
	IA8-400	190 (7.48)	360 (14.17)	
	IA8-450	220 (8.66)	405 (15.94)	
	IA8-500	250 (9.84)	450 (17.72)	Within 0.040 (0.00157)
	IA8-550	290 (11.42)	500 (19.69)	
	IA8-610	320 (12.60)	550 (21.65)	
A-11	IA11-400	190 (7.48)	360 (14.17)	Within 0.035 (0.00138)
	IA11-450	220 (8.66)	405 (15.94)	
	IA11-500	250 (9.84)	450 (17.72)	Within 0.040 (0.00157)
	IA11-550	290 (11.42)	500 (19.69)	
	IA11-610	320 (12.60)	550 (21.65)	
	IA11-710	385 (15.16)	650 (25.59)	Within 0.045 (0.00177)
	IA11-750	435 (17.13)	700 (27.56)	
	IA11-800	485 (19.09)	750 (29.53)	Within 0.050 (0.00197)
	IA11-915	555 (21.85)	850 (33.46)	
	IA11-1000	630 (24.80)	940 (37.01)	Within 0.060 (0.00236)

(3) Installing chuck

a) Accuracy of adaptor installation section has direct influence to the workpiece chucking accuracy. Therefore, machine the adaptor very carefully. Required accuracy is within Ø.ØØ5 mm (Ø.ØØØ2Ø in.) for run-out on circumference, face run-out, and flatness.

b) Any damages such as score or foreign matter on fitting parts and installation surfaces will deteriorate chuck installation accuracy. Install the chuck only after cleaning both the chuck and the adaptor.

After the installation of the chuck, measure run-out of the chuck body circumference and face. Run-out must be within Ø.Ø2Ø mm (Ø.ØØØ79 in.).

c) Insert the chuck onto the spindle with the chuck drive pin hole aligned with the spindle pin. Tighten the chuck clamping bolts gradually and uniformly. After the installation, the chuck fits on the spindle end face in the following manner as illustrated below.

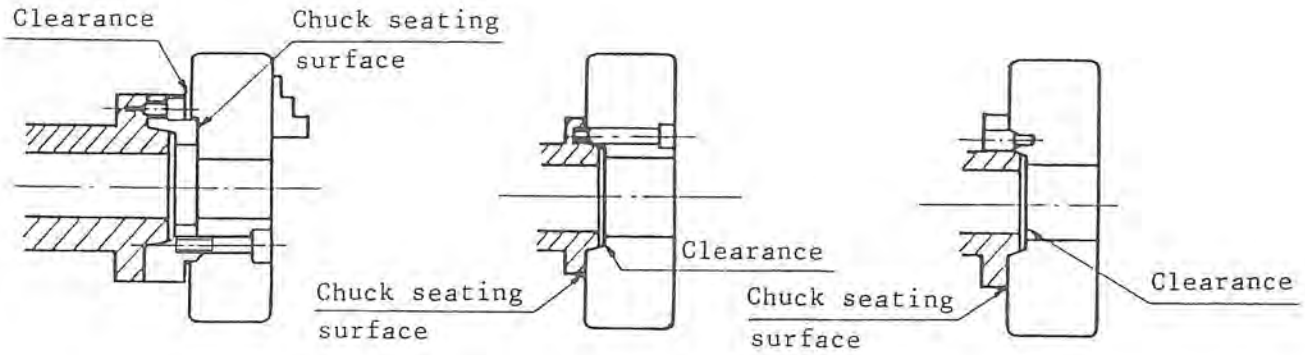

Fig. 3-11

d) To clamp a workpiece, use only the handle supplied with the chuck. If a workpiece is clamped forcibly by inserting a pipe into the handle hole, chucked part will be distorted causing shorter life and deteriorated accuracy.

If higher clamping force is required for your turning operation, use a larger chuck.

e) To hold a long workpiece, always use a tailstock or work rests to support the free end of the workpiece.

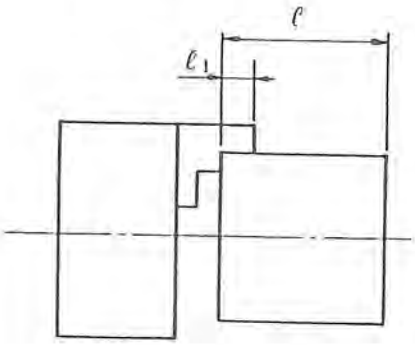

$\ell = \ell 1 + (\ell 1 \times 3.5)$

The workpiece whose length "ℓ" is longer than the value calculated using the formula above, it is recommended to use a tailstock.

f) Never tap a workpiece held in the chuck.

g) Select the chuck size meeting the intended machining operation.

(4) Lubrication and cleaning

To ensure high accuracy for a long period, clean the fitting portions between the chuck body and the chuck jaws, and between the chuck jaw serration and a screw. For the cleaning, remove the jaws.

Supply oil once or twice a day.

(5) Maximum speed

Each chuck has its allowable maximum speed. If a chuck is rotated at a speed exceeding this limit, it will institute hazards to both operators and the machine.

Always tighten or clamp the workpiece at the torque specified in the table below and use the chuck at a speed lower than the indicated maximum speed.

Chuck Specifications (1) - Flat back type chuck

Type	Gripping Force		Maximum Gripping Force		Chuck		
	Handle Torque kgf-m (ft-lbf)	Gripping force/jaw kgf (lbf)	ID Chucking mm (in.)	OD Chucking mm (in.)	Weight kg (lb)	Inertia (GD^2) kgf-m^2	Allowable Max. Speed rpm
IC-4	3.5 (25.3)	5ØØ (1,1ØØ)	4Ø (1.57)	9Ø (3.54)	2.4 (5.3)	Ø.Ø1	2,ØØØ
IC-6	5 (36)	6ØØ (1,32Ø)	6Ø (2.36)	14Ø (5.51)	6.1 (13.4)	Ø.Ø8	1,6ØØ
IC-8	8.5 (61.5)	1,ØØØ (2,2ØØ)	75 (2.95)	185 (7.28)	14.8 (32.6)	Ø.3	1,6ØØ
IC-1Ø	12 (87)	1,4ØØ (3,Ø8Ø)	95 (3.74)	22Ø (8.66)	21 (46)	Ø.6	1,6ØØ
IC-12	15 (1Ø8)	1,6ØØ (3,52Ø)	125 (4.92)	265 (1Ø.43)	29.5 (64.9)	1.4	1,4ØØ
IC-14	16 (116)	1,7ØØ (3,74Ø)	155 (6.1Ø)	31Ø (12.2Ø)	4Ø (88)	2.9	1,4ØØ
IC-16	22 (159)	2,ØØØ (4,4ØØ)	19Ø (7.48)	36Ø (14.17)	56.5 (124.3)	4.5	1,2ØØ
IC-18	22 (159)	2,ØØØ (4,4ØØ)	22Ø (8.66)	4Ø5 (15.94)	7Ø (154)	7.Ø	1,2ØØ
IC-2Ø	25 (181)	2,2ØØ (4,84Ø)	25Ø (9.84)	45Ø (17.72)	9Ø (198)	11.8	9ØØ
IC-22	25 (181)	2,2ØØ (4,84Ø)	29Ø (11.42)	5ØØ (19.69)	135 (297)	17.6	9ØØ
IC-24	28 (2Ø3)	2,3ØØ (5,Ø6Ø)	32Ø (12.6Ø)	55Ø (21.65)	15Ø (33Ø)	25.3	9ØØ
IC-26	28 (2Ø3)	2,3ØØ (5,Ø6Ø)	37Ø (14.57)	61Ø (24.Ø2)	176 (387)	42	9ØØ
IC-28	3Ø (217)	2,35Ø (5,17Ø)	385 (15.16)	65Ø (25.59)	247 (543)	58	9ØØ
IC-3Ø	3Ø (217)	2,4ØØ (5,28Ø)	435 (17.13)	7ØØ (27.56)	284 (625)	8Ø	6ØØ
IC-32	3Ø (217)	2,4ØØ (5,28Ø)	485 (19.Ø9)	75Ø (29.53)	357 (785)	1Ø6	6ØØ
IC-36	36 (26Ø)	2,4ØØ (5,28Ø)	555 (21.85)	85Ø (33.46)	413 (9Ø9)	173	6ØØ
IC-4Ø	52 (376)	3,ØØØ (6,6ØØ)	63Ø (24.8Ø)	94Ø (37.Ø1)	6ØØ (1,32Ø)	3Ø3	6ØØ

Chuck Specifications (2) - Type A short taper chuck

Spindle Nose	Type	Gripping Force		Maximum Gripping Force		Chuck		
		Handle Torque kgf-m (*1)	Gripping Force/Jaw kgf (lbf)	ID Chucking mm (in.)	OD Chucking mm (in.)	Weight kg (lb)	Inertia (GD^2) kgf-m^2	Allowable Max. Speed rpm
A2-5	IA 5-2ØØ	8.5 (61.5)	1,ØØØ (2,2ØØ)	75 (2.95)	185 (7.28)	14.9 (32.8)	Ø.32	3,6ØØ
A2-6	IA 6-25Ø	12 (87)	1,5ØØ (3,3ØØ)	95 (3.74)	22Ø (8.66)	24.2 (53.4)	Ø.75	3,ØØØ
	IA 6-3ØØ	15 (1Ø8)	1,6ØØ (3,52Ø)	125 (4.92)	265 (1Ø.43)	39.1 (86.Ø)	1.6	2,ØØØ
	IA 6-35Ø	15 (1Ø8)	1,6ØØ (3,52Ø)	155 (6.1Ø)	31Ø (12.2Ø)	5Ø.9 (112.Ø)	3.Ø	2,ØØØ
	IA 6-4ØØ	22 (159)	2,ØØØ (4,4ØØ)	19Ø (7.48)	36Ø (14.17)	69.8 (153.6)	4.7	1,8ØØ
	IA 6-45Ø	25 (181)	2,3ØØ (5,Ø6Ø)	22Ø (8.66)	4Ø5 (15.94)	97.2 (213.8)	7.1	1,2ØØ
	IA 6-5ØØ	25 (181)	2,3ØØ (5,Ø6Ø)	25Ø (9.84)	45Ø (17.72)	1Ø3.5 (227.7)	13.5	1,2ØØ
A2-8	IA 8-35Ø	22 (159)	2,ØØØ (4,4ØØ)	155 (6.1Ø)	31Ø (12.2Ø)	56.2 (123.6)	3.1	2,ØØØ
	IA 8-4ØØ	25 (181)	2,3ØØ (5,Ø6Ø)	19Ø (7.48)	36Ø (14.17)	73.8 (162.4)	5.Ø	1,8ØØ
	IA 8-45Ø	25 (181)	2,3ØØ (5,Ø6Ø)	22Ø (8.66)	4Ø5 (15.94)	1Ø2.5 (225.5)	7.3	1,2ØØ
	IA 8-5ØØ	25 (181)	2,3ØØ (5,Ø6Ø)	25Ø (9.84)	45Ø (17.72)	1Ø8.4 (238.5)	14.2	1,2ØØ
	IA 8-55Ø	25 (181)	2,3ØØ (5,Ø6Ø)	29Ø (11.42)	5ØØ (19.69)	123 (271)	16.1	1,2ØØ
	IA 8-61Ø	28 (2Ø3)	2,3ØØ (5,Ø6Ø)	32Ø (12.6Ø)	55Ø (21.65)	136 (299)	22.8	1,1ØØ

(cont,d)

*1: ft-lbf

Spindle Nose	Type	Gripping Force		Maximum Gripping Force		Chuck		
		Handle Torque kgf-m (*1)	Gripping Force/Jaw kgf (lbf)	ID Chucking mm (in.)	OD Chucking mm (in.)	Weight kg (lb)	Inertia (GD^2) kgf-m^2	Allowable Max. Speed rpm
A2-11	IA 11-5ØØ	25 (181)	2,3ØØ (5,Ø6Ø)	25Ø (9.84)	45Ø (17.72)	13Ø (286)	16.9	1,2ØØ
	IA 11-55Ø	25 (181)	2,3ØØ (5,Ø6Ø)	29Ø (11.42)	5ØØ (19.69)	145 (319)	18.9	1,1ØØ
	IA 11-61Ø	28 (2Ø3)	2,3ØØ (5,Ø6Ø)	32Ø (12.6Ø)	55Ø (21.65)	2Ø4 (449)	34.5	9ØØ
	IA 11-71Ø	4Ø (289)	3,ØØØ (6,6ØØ)	385 (15.16)	65Ø (25.59)	257 (565)	6Ø	8ØØ
	IA 11-75Ø	46 (333)	3,ØØØ (6,6ØØ)	435 (17.13)	7ØØ (27.56)	3ØØ (66Ø)	85.7	8ØØ
	IA 11-81Ø	55 (398)	3,ØØØ (6,6ØØ)	45Ø (17.72)	75Ø (29.53)	38Ø (836)	132.5	6ØØ
	IA 11-915	46 (333)	3,ØØØ (6,6ØØ)	555 (21.85)	85Ø (33.46)	44Ø (968)	184.5	6ØØ
	IA 11-1ØØØ	67 (485)	3,7ØØ (8,14Ø)	63Ø (24.8Ø)	94Ø (37.Ø1)	57Ø (1,254)	288.2	6ØØ
A2-15	IA 15-61Ø	45 (325)	2,7ØØ (5,94Ø)	28Ø (11.Ø2)	52Ø (2Ø.47)	215 (473)	4Ø.2	9ØØ
	IA 15-71Ø	46 (333)	2,8ØØ (6,16Ø)	385 (15.16)	65Ø (25.59)	28Ø (616)	81.5	8ØØ
	IA 15-75Ø	46 (333)	2,8ØØ (6,16Ø)	42Ø (16.54)	69Ø (27.17)	23Ø (5Ø6)	95.2	6ØØ
	IA 15-81Ø	55 (398)	3,ØØØ (6,6ØØ)	46Ø (18.11)	75Ø (29.53)	392 (862)	136.6	6ØØ
	IA 15-915	74 (535)	3,ØØØ (6,6ØØ)	5ØØ (19.69)	8ØØ (31.5Ø)	5ØØ (1,1ØØ)	2Ø8.5	5ØØ
	IA 15-1ØØØ	74 (535)	3,ØØØ (6,6ØØ)	55Ø (21.65)	9ØØ (35.43)	61Ø (1,342)	29Ø	5ØØ

*1: ft-lbf

SECTION 4 MAINTAINING YOUR NC LATHE IN THE BEST CONDITION - REGULAR INSPECTION AND MAINTENANCE OF MACHINE

Your NC lathe is a highly efficient production machine calling for a much higher utilization rate than an engine lathe.

This section deals with the maintenance requirements which must be met by every user in order to insure excellent, trouble-free performance and prolonged life.

It also outlines some basic steps to pinpoint possible causes of trouble, together with troubleshooting hints, if your NC lathe is found out of order in any way, or in need of readjustment or repair.

Generally, NC lathes are used at three to four times higher "utilization" rates than manually controlled engine lathes. To insure a maximum productive time with a minimum of downtime, the machine must be periodically inspected and carefully serviced.

A periodical inspection schedule is presented below. In addition to the regular maintenance items given here, there are some maintenance items which should be checked according to the actual condition of the machine, as described in this section.

Periodical Inspection Schedule

Daily:

(1) Check oil level through the oil level gauges in the hydraulic power unit, guideway lube oil tank, and headstock lube oil tank.

Check oil flow through the oil window at the front of the headstock.

(2) Check gripping pressure of the hydraulic power chuck through the oil pressure gauge.

Check working pressure for the turret drive through the oil pressure gauge.

(3) Greasing to power chuck jaw slide surfaces.

(4) Checking lubricated conditions of bed and saddle slideway surfaces.

Monthly:

(1) Check the bedways for level and straightness.

(2) Flush out the hydraulic power unit and change the hydraulic fluid.

These two items must be carried out after the first month of operation following initial installation of the machine.

(1) Change oil in the headstock lubrication system. This must be done after the first three months of operation.

Every six months:

(1) Change lubricating oil in the headstock lubrication system.

(2) Change hydraulic oil in the hydraulic power unit.

(3) Check and adjust belt tension.

The following details the regular maintenance requirements for your NC lathe.

4-1. LUBRICATION

The machine should be completely and correctly lubricated in strict adherence with the directions in the Lubrication Chart in the following page.

(1) Always use the specified lubricant.

a) If the oil other than specified is used, the lubrication unit might fail to operate normally.

b) Lubricant used in common with coolant or lubricant used in common with hydraulic oil might cause corrosion of lubrication unit or mixing of oils to result in lubrication failure, which, in turn, leads to damages on the slideway surfaces.

(2) For coolant, use the specified coolant.

a) Coolant usually contains chemical additives such as activator. If improper coolant is used, lubricant will be affected by chemicals and therefore, use the specified coolant so far as possible.

b) If coolant which is not our recommendation is to be used, check to be sure that it will not cause any following problems.

Mixing with lubricant, possible parting, peel of paint, rusting, and swelling of packings

If a problem is found during the use of the coolant, avoid the use of such coolant.

(3) Amount of lubricant oil and its discharge condition must be checked every day.

Prior to shipment of the machine from our plant, the oil and the coolant tanks are flushed out and must therefore be refilled during the initial installation of the machine.

Headstock lube oil tank	:	CB32 (MAS)	12.9 liters (3.3 U.S. gal.)
Hydraulic power unit	:	HL32 (MAS)	40 liters (10.6 U.S. gal.)
Coolant	:	High chip NP-2212	

Lubrication Chart

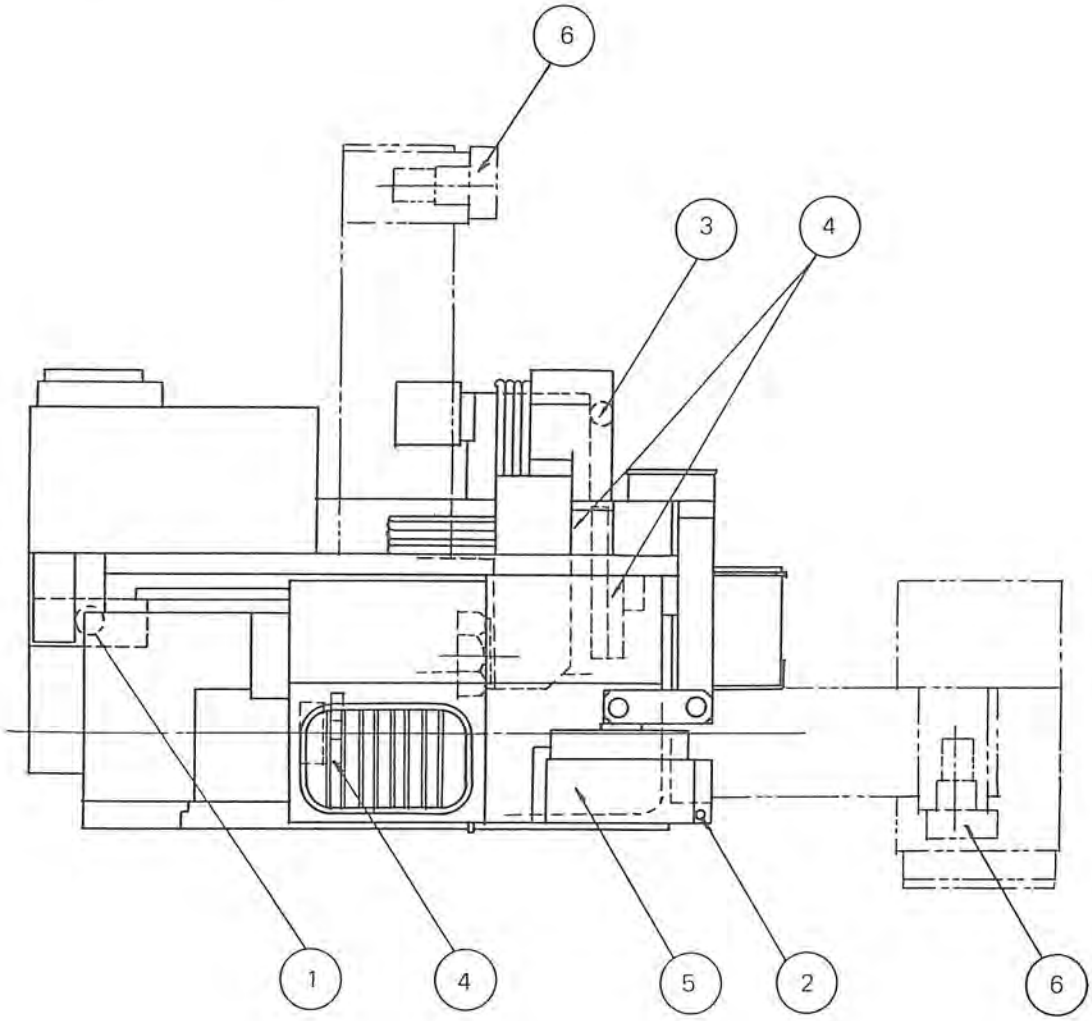

Fig. 4-1

Table 4-1

No.	Service point	Amount	Oil specification (MAS)	Remarks
1	Headstock	12.9 liters (3.4 U.S. gal.)	CB32	Change after the first three months of operation, and every six months thereafter.
2	Guideways	4 liters (1.1 U.S. gal.)	G68	Replenish as required.
3	Hydraulic power unit	40 liters (10.6 U.S. gal.)	HL32	Change after the first one month of operation, and every six months thereafter.
4	Power chuck jaws	As required	XM2	Every day when cleaning.
5	Coolant tank	150 liters (40 U.S. gal.)	High chip NP-2212	Replenish as required.
6	Chip conveyor	As required	XM2	Replenish in three to six months.

Note: Chip conveyor is optional.

Table 4-2 Lubrication Oil Specification

Application	Code	Esso	Shell	Mobil
Headstock Gearbox (Spindle Gearbox with C-axis) Separately Installed Gearbox	CB32	Unipower FM32	Tetra Oil 32	DTE Oil Light*
Cam Type Turret	CC32Ø	Spartan EP32Ø*	Omala Oil 32Ø	Gear Oil 632
Spindle Bearing Lubrication Unit	FC1Ø	Spinesso 1Ø*	Tetra Oil 1Ø	Velocite No. 6*
Centralized Slideway Lubrication Unit (M-turret, Ball Screw)	G68	Febis K68	Tonna Oil T68*	——
	G22Ø	Febis K22Ø	Tonna Oil T22Ø*	——
Hydraulic Power Unit	HL32	Unipower FM32	Tetra Oil 32	DTE Oil Light*
M-tool holders	(Grease)	——	——	Mobilux 2*
Turret Skirt	XM2 (Grease)	Lithtan 2	Alvania Grease 2	Mobilux 2*
Master Jaw on Chuck	(Grease)	Molykoat EP grease (Dow Corning) for Kitagawa power chuck. For special chucks, refer to the instruction manual supplied with the chuck.		

Note 1: The table above is based on the MAS.

We do not have any experience in using the oils other than those indicated by an asterisk (*). Selection should thus be made from them. Because slideway lubrication oil contains additives such as extreme-pressure additive, it could incur variety of troubles if reacting with other oils or coolant. Therefore, pay special attention to the use of slideway lubrication oil.

Note 2: As for service point or amount of lubrication oil of the machine, refer to the Instruction Manual of respective machine models.

Note 3: G22Ø code oil for the centralized slideway lubrication unit is used only on LH55-N and LC5Ø (large-sized models).

Note 4: Always use the lubrication oil specified by Okuma for slideway lubrication.

Lubrication oil used in common with coolant or lubrication oil used in common with hydraulic oil might cause corrosion of lubrication unit or turbidness of oils to result in lubrication failure, which, in turn, leads to damages on the slideway surface or ball screw. (We take no responsibility for the troubles caused by using the lubrication oil which is not our recommendation.)

Note 5: As for oil replenishment for the optional accessories such as special chucks or chip conveyor, refer to the Special Instruction Manual supplied with individual accessories.

Note 6: When slideway lubrication oil mixed with coolant and some trouble appears, contact your local Okuma representatives. They have optional accessories such as oil skimmer.

4-1-1. Headstock Lubrication System

The headstock lube oil tank is located at left front of the machine.

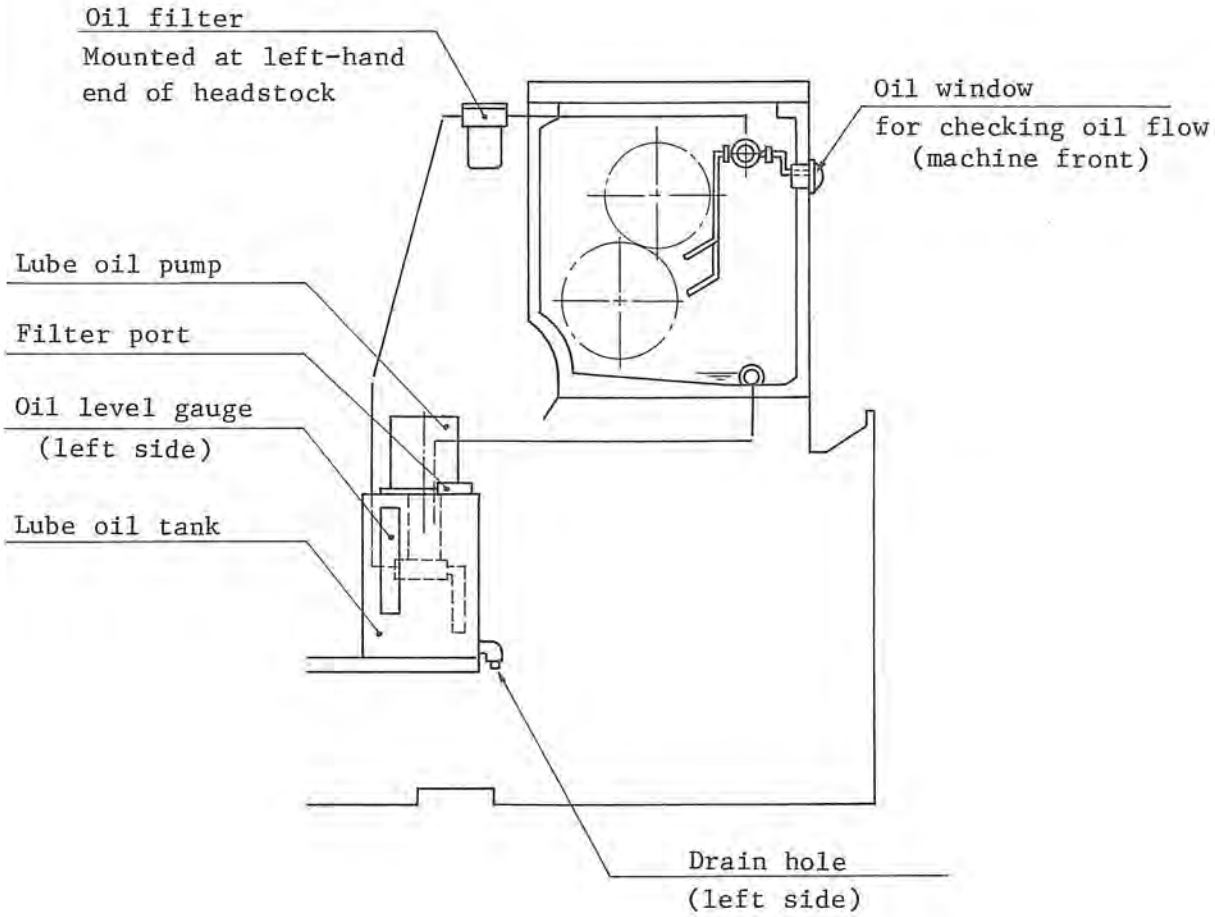

Fig. 4-2

Table 4-3

Recommended Type of Lubricant (MAS)	CB32
Quantity Required	12.9 liters (3.4 U.S. gal.)
Frequency of Servicing	Change after the first 3 months of operation and thereafter every 6 months.

Clean the filter each time an oil change is made.

When the machine is operated at a high "utilization" rate, special care should be exercised as to cleanliness and the condition of the oil used. If the oil is dirty, oil changes must be made more frequently than specified in the above table.

All the spindle bearings are lubricated by packed high quality grease, requiring no further greasing.

4-1-2. Guideway Lubrication System

For bed, saddle, cross-slide, X- and Z-axis ball screws and tailstock sleeve.

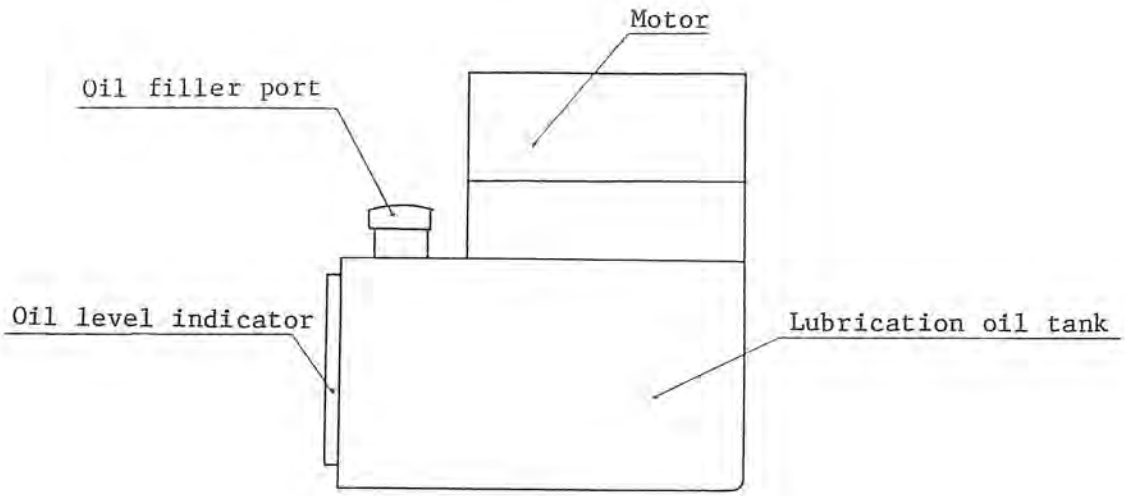

Fig. 4-3

Table 4-4

Recommended Type of Lubricant (MAS)	G68
Quantity Required	4 liters (1.1 U.S. gal.)
Frequency of Servicing	Since the lubricating oil is not re-circulated, lubricating oil amount must be checked every day. Lubricating oil consumption rate is factory-set at 30 mm (1.18 in.) in oil level indication in 50 operation hours.

Note: Check oil level before starting the day's operation.

With the chuck opened, enter a spindle rotation command and depress the CYCLE START button. This will cause alarm display. Then, depress the RESET button and the lubricating oil is fed to each lubrication point. Repeat this several times to lubricate the slideways well.

The centralized lubrication oil tank is provided at the right hand side of the machine. The lubrication oil is fed to the bed slideways, the cross-slide slideway, the X- and Z-axis drive ballscrews and the tailsctock sleeve.

4-2. CLEANING THE FILTER

Cleaning the filter should be carried out periodically.

Use of clogged filter elements allows "dirty oil" to be circulated through the system, leading to serious trouble.

Remove the element from the casing

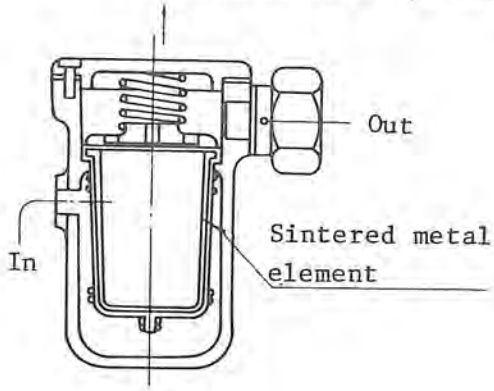

Procedure and Cautions

- o Removal of the element is simple, but extra care must be taken when unscrewing the cap since it is sprung off the moment the compressed spring is released.

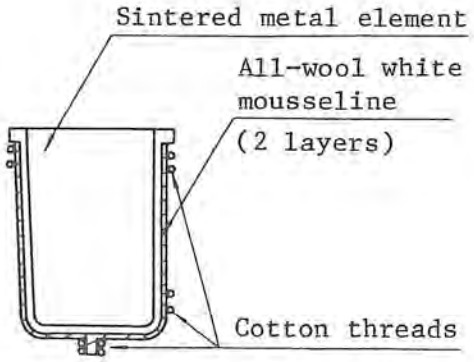

Fig. 4-4

- o Unwind the cotton thread.
- o Renew two layers of all-wool (100% wool) white mousseline.
- o Clean both the inside and the outside areas of the element with solvent naphtha or petroleum benzine. After the gas has been allowed to evaporate completely, set the element in place.
- o Never use a wipe cloth on the element since it might become clogged with lint and other foreign matters.

4-3. ADJUSTING CENTRALIZED LUBRICATION UNIT

(1) Adjusting Pump Delivery

The delivery amount to each lubrication point is controlled by the metering type distribution valve, and no further adjustment is necessary.

(2) Maintenance

When no lube oil is delivered:

a) Oil level is low.

Replenish the lube oil of the same brand.

b) The pump is at a rest: the pump operates intermittently.

The pump operation interval is set at 5 minutes.

c) The suction pipe is plugged or the filter is clogged.

Clean the filter at least every six months.

(3) Other Remarks

a) The lube oil to be replenished must be clean and it must be of the same brand as currently used.

b) When clean the tank and the filter, NEVER USE THINNER OR TRICHLEN (trichloroethylene) SHOWING HIGH VOLATILE CHARACTERISTICS.

c) Specified Lube Oil: G68 (MAS)

4-4. CLEANING COOLANT TANK

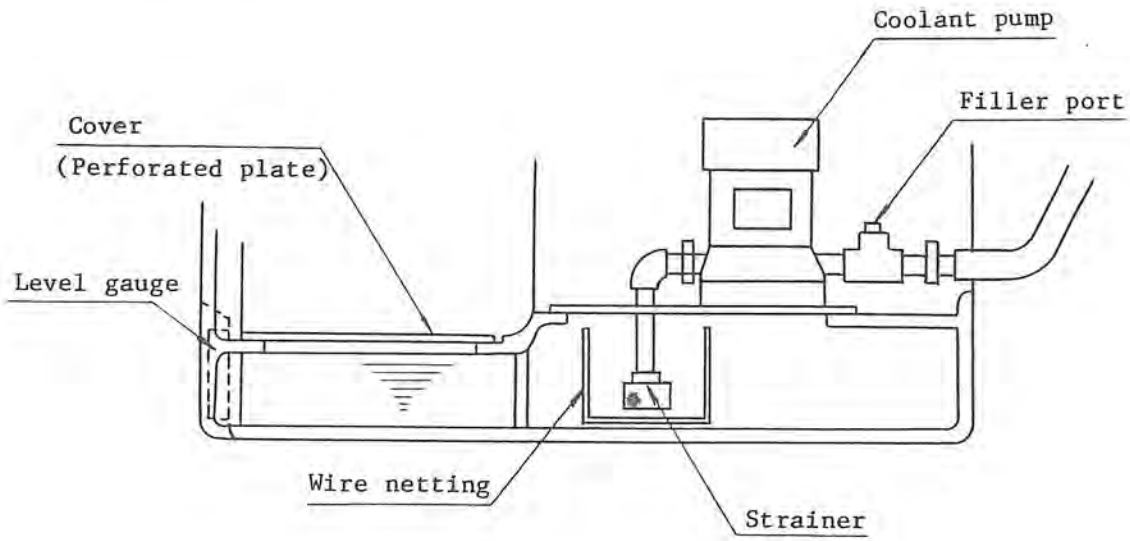

Fig. 4-5

The coolant tank integral with the machine base casting should be cleaned periodically.

Procedure:

(1) Draw the coolant out of the tank by the pump into a proper storage container.

(2) Remove the perforated metal plate and clean it.

(3) Clean out the tank.

(4) Remove the strainer from the suction line of the pump.

(5) Clean the strainer.

(6) Refill the coolant tank.

4-5. TENSIONING BELTS

4-5-1. V-belt Drive from Main Drive Motor to Headstock

Adjust the tension of the belts by moving the tension pulley through the tension adjusting screw.

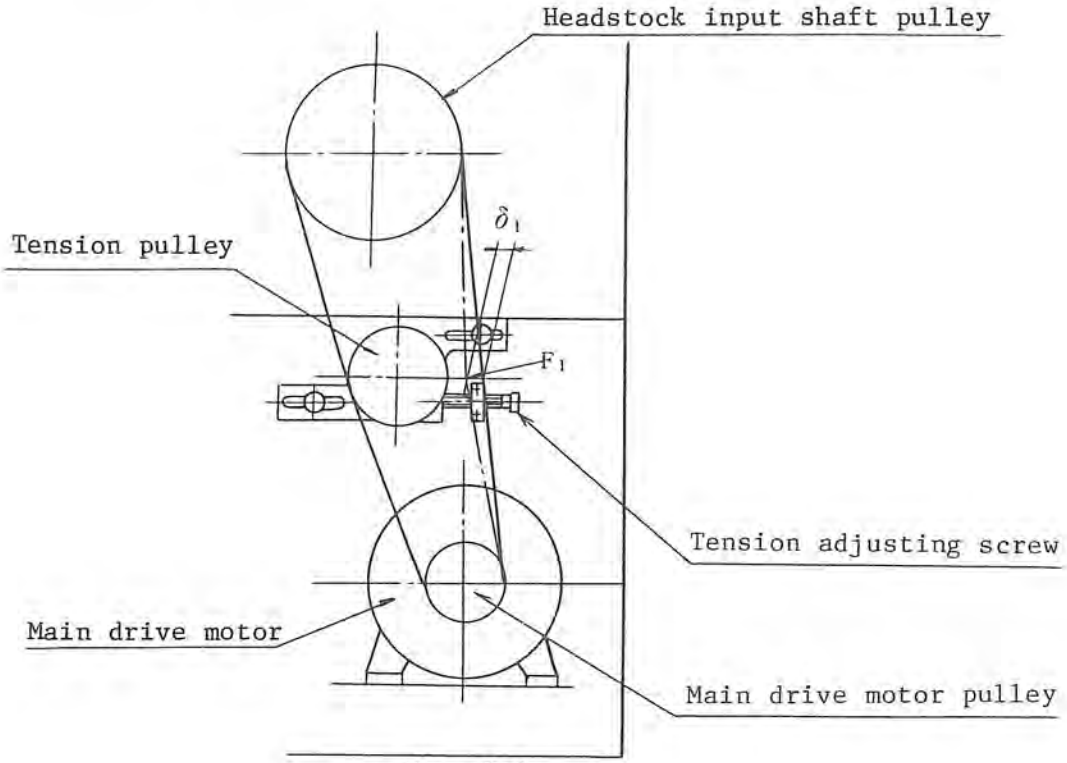

Fig. 4-6

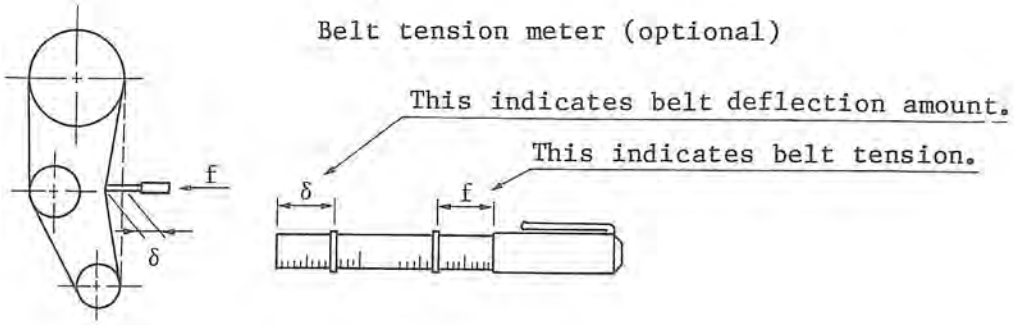

Fig. 4-7 Belt Tension Adjustment

	Type of Belting	Type and Size	No. of Pulley Grooves	f kg (lb.)		δ mm (in.)
				New belt	Readjustment	
7.5/5.5 kW (10/7.5 HP)	Banflescrum	6-7MS-1450 (M119-0006-39)	6 Grooves	7±1 (15.4±2.2)	6.5±1 (14.3±2.2)	4 (0.16)
11/7.5 kW (15/10 HP)	Banflescrum	8-7MS-1450 (M119-0006-34)	8 Grooves	10±1 (22±2.2)	9±1 (19.8±2.2)	4 (0.16)

4-5-2. Timing Belt for Pulse Generator

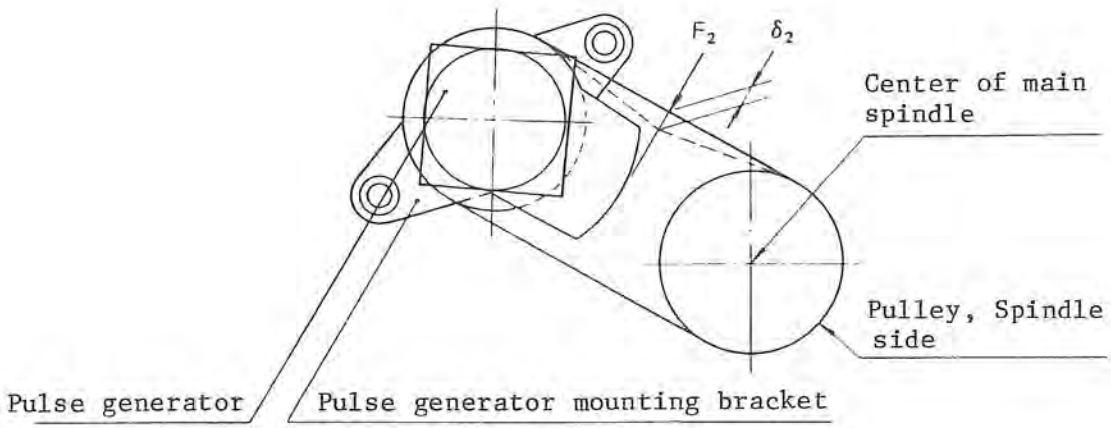

Fig. 4-7

Adjust the tension of the belt by moving the pivoted pulse generator mounting bracket.

Table 4-6

Type of Belting	Type and Size	No. of Belts	Thumb Pressure F_2 kg (lb.)	Amount of Deflection δ_2 mm (in.)
Timing Belt	255L050 (M1131-05-255)	1	0.35 (0.77)	3 (0.12)

4-5-3. Timing Belt for Z-axis Drive Servomotor

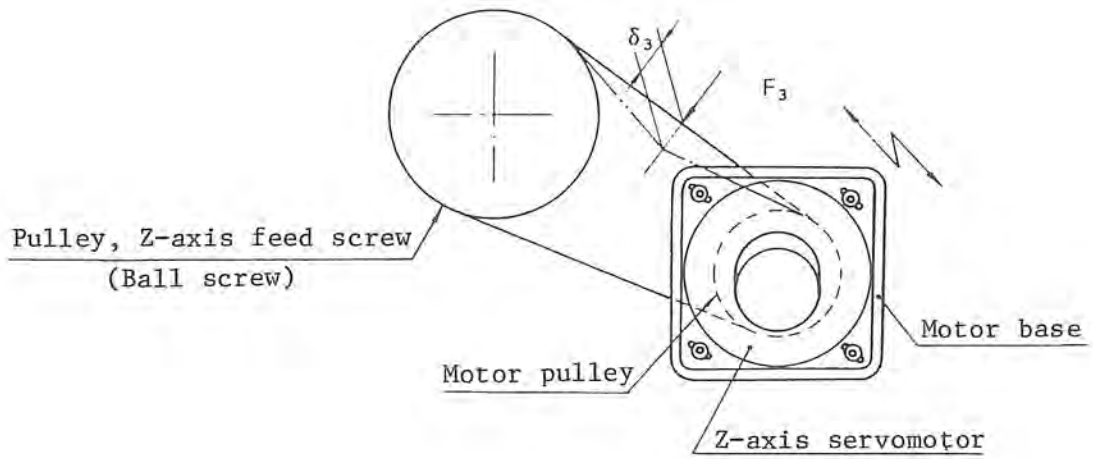

Fig. 4-8

Adjust the tension on the belt by moving the servomotor base.

Table 4-7

Type of Belting	Type and Size	No. of Belts	Thumb Pressure F_3 kg (lb.)	Amount of Deflection δ_3 mm (in.)
Timing Belt	STS 25ØS8M944 (M119-ØØØ7-49)	1	3.5 (7.7)	5 (Ø.2Ø)

4-5-4. Timing Belt for X-axis Servomotor

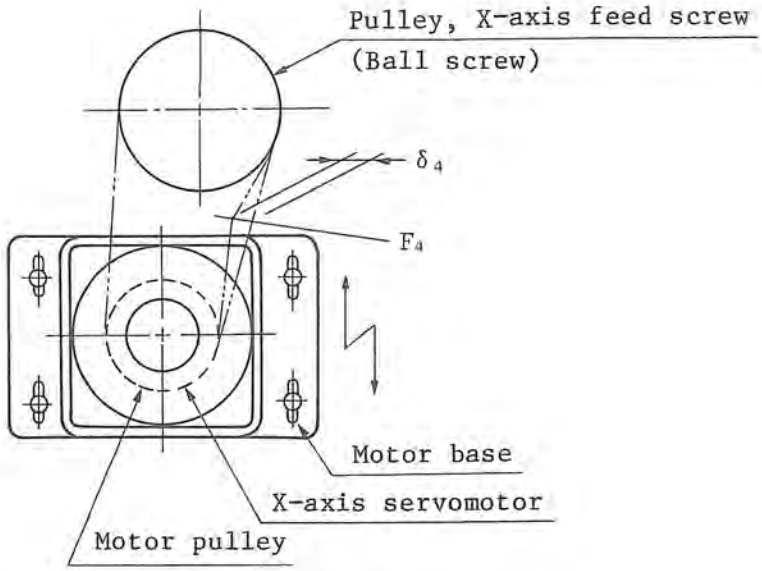

Fig. 4-9

Adjust the tension on the belt by moving the servomotor base.

Table 4-8

Type of Belting	Type and Size	No. of Belts	Thumb Pressure F_4 kg (lb.)	Amount of Deflection $_4$ mm (in.)
Timing Belt (X-axis)	STS 25ØS8M8ØØ (M119-ØØØ6-91)	1	3.5 (7.7)	3.8 (Ø.15)

4-6-1. Adjusting Turret Indexing Speed

A. How to Adjust Turret Indexing Speed

The turret indexing speed varies in accordance with the change of oil temperature as illustrated in the turret indexing time vs. oil temperature chart provided separately. Therefore, when setting the turret indexing speed (time), it is necessary to check oil temperature.

Before attempting the setting, turn on power supply and warm up the hydraulics until the temperature in the tank reaches approx. 40°C. Then set the turret index speed following the procedure below:

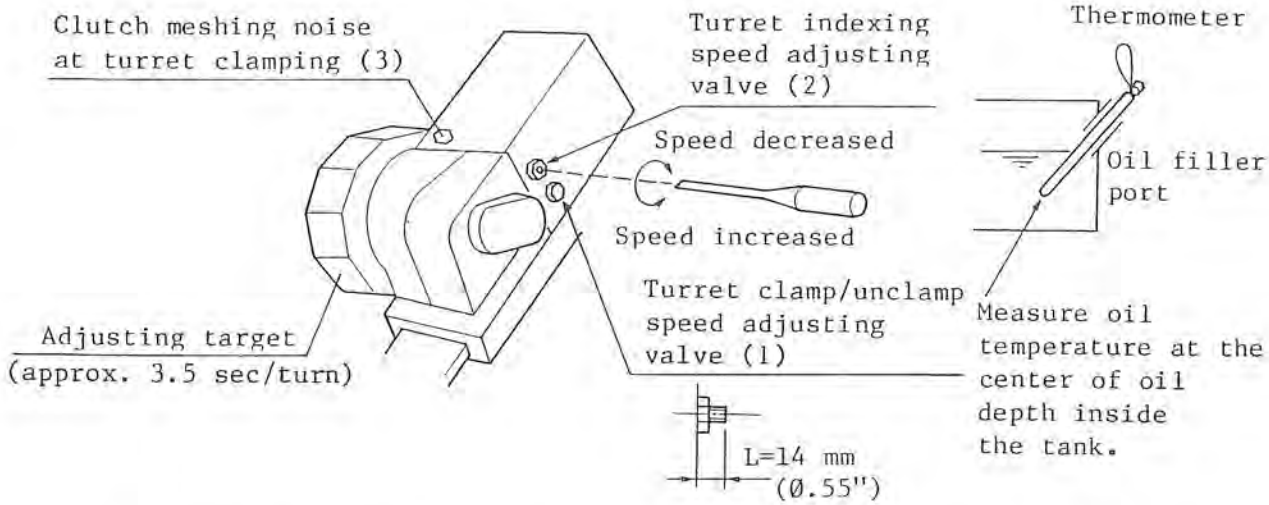

(1) Open the clamp/unclamp speed adjusting valve (1) and set "L" at 14 mm (0.55").

(2) While rotating the turret, tighten the valve (3) until the clutch meshing noise is not heard and lock it in that position.

(3) Turn the turret indexing speed adjusting valve (2) so that the turret indexing speed will be 3.5 sec. per full turn. Then, tighten the nut securely.

With the operations above, the turret indexing time is adjustable at 0.8 sec. per station at an oil temperature of 40°C.

Confirm the turret indexing speed following the procedure explained on the following page.

Note: If oil temperature is low, 30°C for instance, then set the turret indexing speed at 4.5 sec. per turn as per the turret indexing time vs. oil temperature chart.

B. How to Check Turret Indexing Time

Turret indexing time for one station is measured using the OSP software and it is displayed on the CRT. Note that this software is supplied as a standard feature for the OSP manufactured from September 1985.

The procedure to display the turret indexing time on the CRT is explained below:

(1) Manually index the turret. This turret indexing may be done either automatically or in the MDI mode operation.

(2) Switch the display page to the CHECK DATA page by pressing the function key [F7] (CHECK DATA). Then, access to the page on which the AXIS DATA is displayed.

An Example of AXIS DATA Display Page

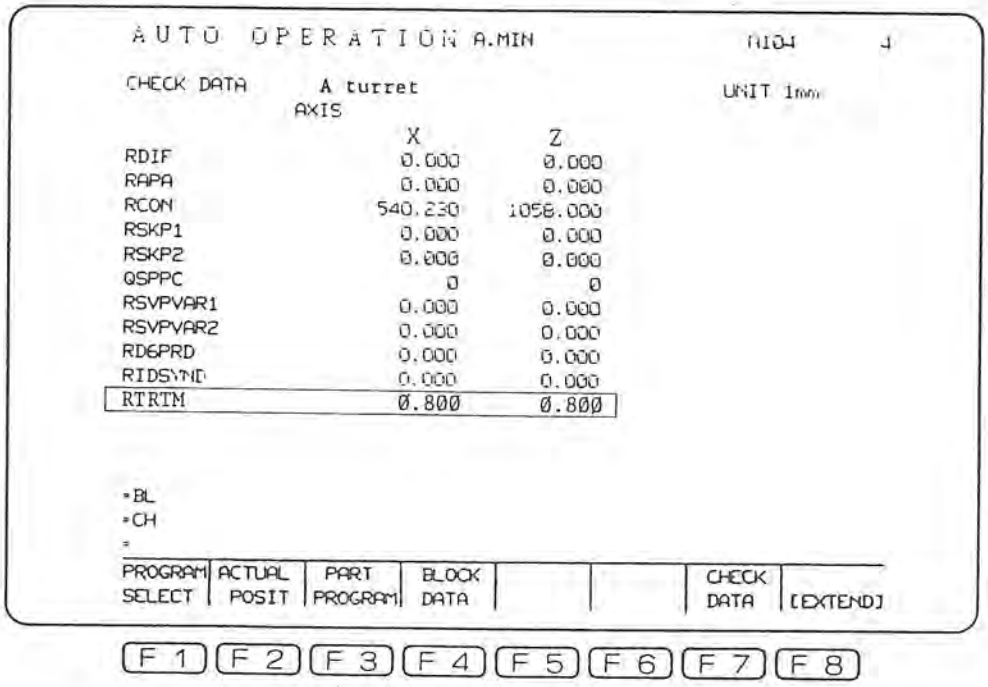

(3) At parameter RTRTM, the turret indexing time of the turret being indexed is displayed at X and Z column. Note that the values at these two columns must be identical.

0.000

Three digits right to a decimal place

Indexing time in seconds

Therefore, if turret indexing from one station to the next is attempted, turret indexing time per station is displayed, while if one full turn of the turret has been commanded, then the turret indexing of one full turn is displayed.

If the values at these columns differ from the desired set values, re-adjust the turret indexing speed as indicated in steps from (1) to (3) above.

Turret Indexing Time vs. Oil Temperature Chart (for V12)

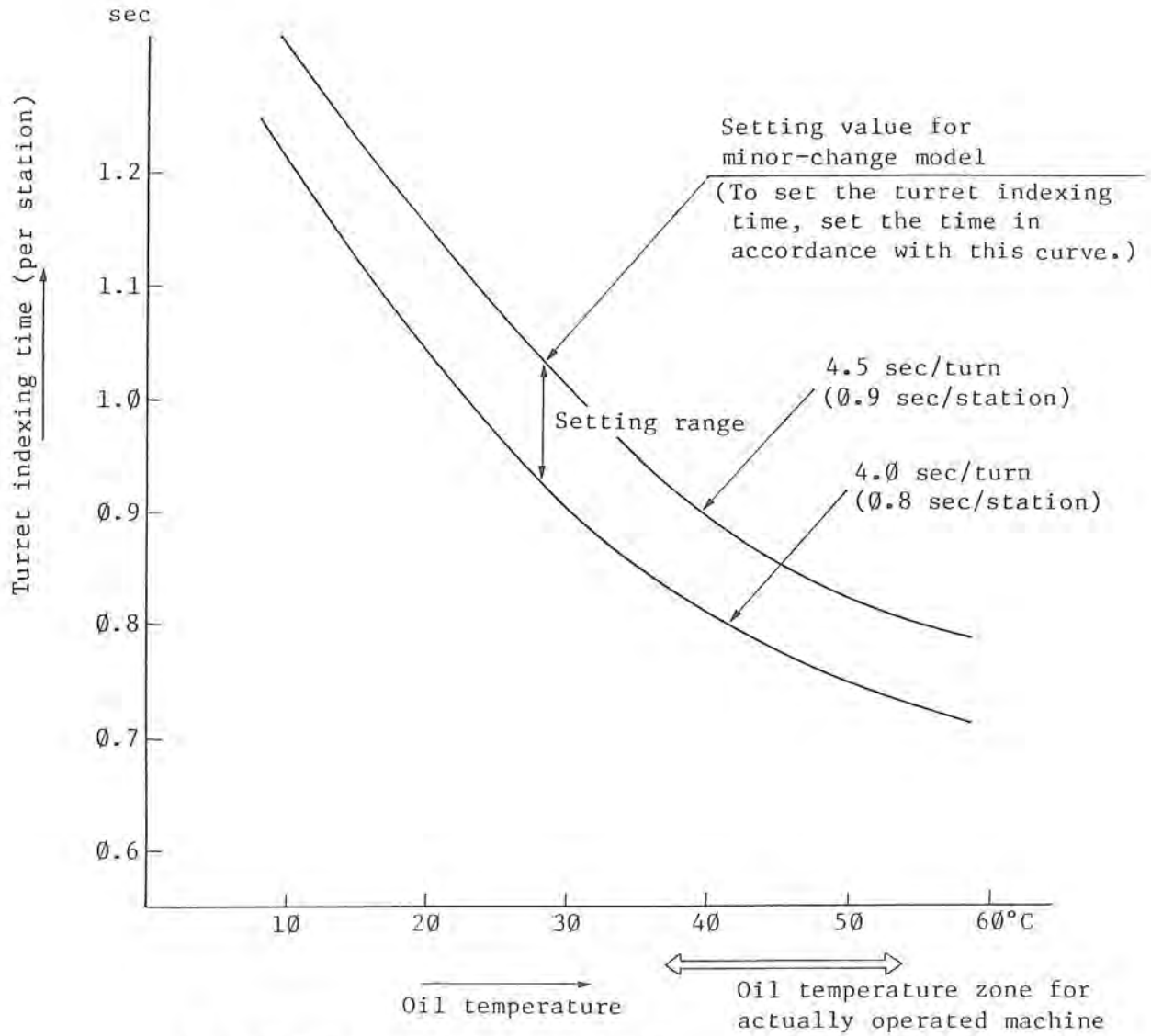

With standard hydraulic power unit

Oil pressure: 30 kg/cm^2 (427 psi)
Oil flowrate: 20 lit/min. (5.3 gpm)
Oil amount : 40 lit. (10.6 U.S. gallons)

4-6-2. Check The Bed Level

The straightness or level of the bedways will affect the machining accuracy. In case parts cannot be turned to specified tolerances, first check and secure the machine level, then proceed with necessary adjustments (See Section 5-4, "Levelling The Machine").

4-6-3. Alignment of Headstock

If a taper is generated on the turned workpiece (i.e., not cylindrical), proceed with the alignment of the headstock as follows:

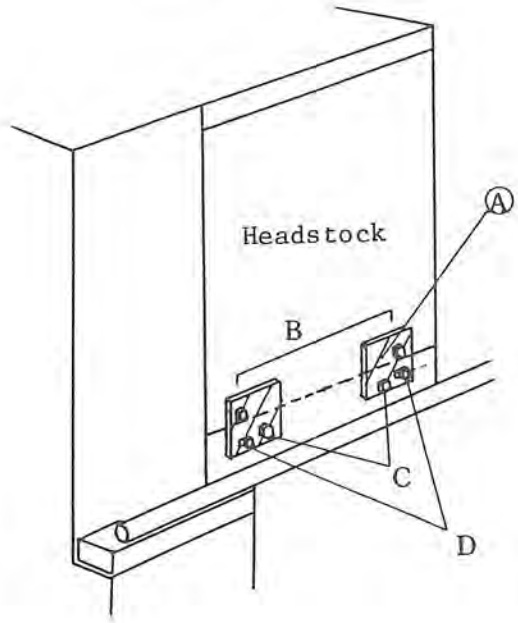

Fig. 4-12 Mounting Fixture for Headstock Alignment

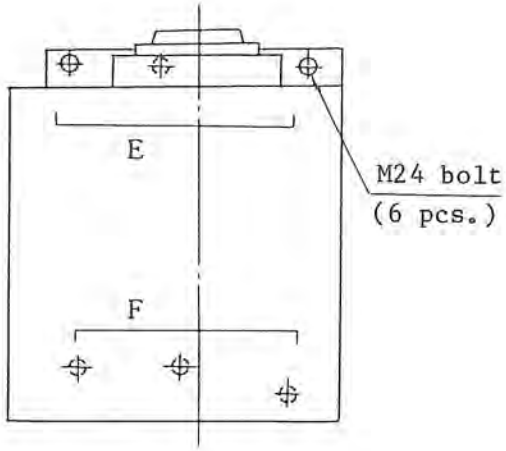

Fig. 4-13 Headstock Securing Screws (Top View)

Procedure:

(1) Secure the headstock alignment fixture (A) at the front of the headstock with three M12 screws (Screw B).

(2) Tighten two M12 screws (Screw C) to the base lightly.

(3) Screw in two M12 screws (Screw D) into the fixture (A) until they touch the base.

(4) Loosen six M24 screws (Screw E and F).

(5) Align the headstock with screws C and D.

(6) After completing headstock alignment, secure screws E and F then remove the fixture (A).

For Your Information:

The Japanese Industrial Standard (JIS) specifies that the lathe should turn cylindrically to within 0.015 per 255 mm (0.00059 per 8.86 in.) of finishing length of work held in a chuck without the use of tailstock center to hold the work.

4-6-4. Adjustment of Tapered Gibs

The machine is shipped after complete adjustment of tapered gigs. Re-adjustment will become necessary when the gibs are worn or loosened by use, resulting in noticeable irregular feed movement, which adversely affects the working accuracy.

Remove the covers from the left- and right-hand sides of the Z-axis slide (carriage or saddle), and then adjust the gib position by means if the gib adjusting screws shown below.

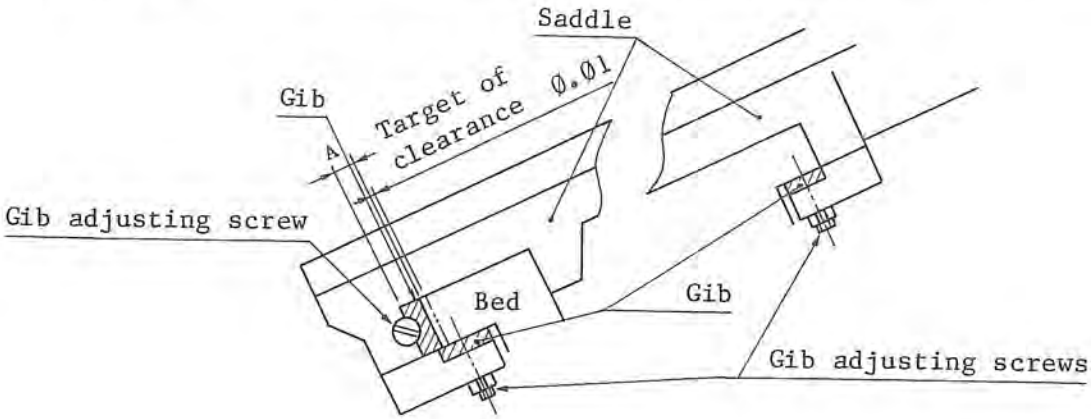

Fig. 4-14

Gib Adjustment Procedure:

(1) Loosen gib A at thinner side.

(2) Tighten the thicker side of gib A fully and then return by one half turn.

(3) Tighten the thinner side of gib A.

(4) Tighten the thicker side of gib A.

Clearance should be Ø.Ø1 mm.

Adjust the gibs for the cross slide in the same manner.

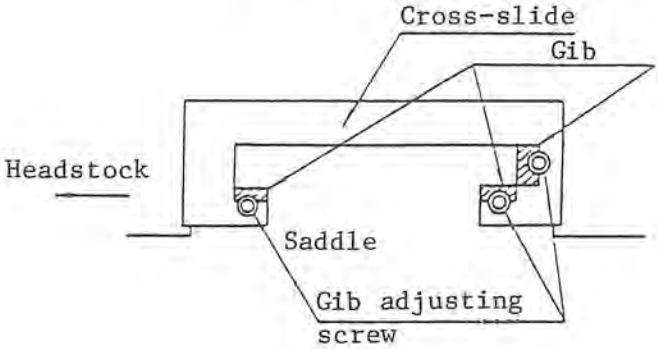

Remove the wiper cases from the cross-slide. Then adjust the gib position by means of the gib adjusting screws shown below.

Fig. 4-15

4-7. TROUBLESHOOTING FOR SIMPLE MECHANICAL TROUBLE

4-7-1. Trouble with Headstock

(1) No Spindle Rotation

Is the power chuck closed?

For machine with tailstock:

CENTER-WORK/CHUCK-WORK selector setting:

CENTER-WORK ..... Tailstock sleeve must be at the advance end

CHUCK-WORK ..... Tailstock sleeve must be at the retraction end

(2) No Oil Flow Observed through Oil Window

Is the lubrication pump operating?

↓

Does the lube oil tank have sufficient amount of lube oil?

↓

Is the filter clogged? → Clean the filter. (See Section 4-2.)

(3) No Chuck Jaw Movement

Is the oil pressure set to the required level?

↓ Adjust the system pressure. (See Item 3-2-3 (4).)

↓

Is the draw screw connected properly to the connecting rod?

↓ Adjust the draw screw setting. (See Item 3-2-3 (1).)

↓

Do the master jaws move normally?

↓

Remove chips and apply machine oil.

4-7-2. Trouble with Turret

(1) No Turret Indexing

Does the turret locate at the turret indexing position?

↓ Locate the turret to the turret indexing position manually.

Have chips accumulated under the turret?

↓ Remove chips.

Is the oil pressure set to the required level?

↓ Adjust the system pressure.
(See Item 3-2-1 (3).)

(2) Weak Turret Clamping Pressure

Is the oil pressure set to the required level?

↓ Adjust the system pressure.
(See Item 3-2-1 (3).)

(3) After Collision of Turret

a) Checking after turret collision

Misalignment of the turret or the headstock might be caused when the turret is struck against the workpiece or the headstock due to operation error or programming error, or when an abnormally heavy load is imposed on the turret due to axis feed with damaged inserts. The procedure to check the alignment of the turret and the headstock is explained below.

1) Checking turret alignment

Checking turret inclination

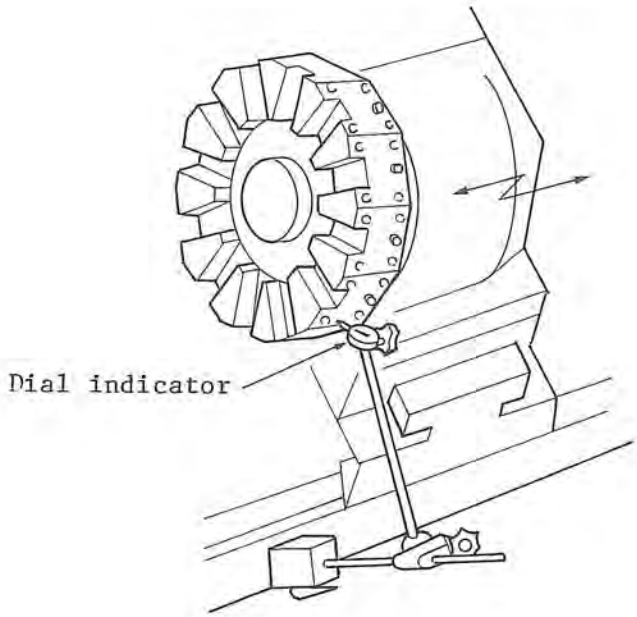

Fig. 4-16

Set the dial indicator as illustrated in Fig. 4-16 and feed Z-axis using the pulse handle to check the inclination of the toolholder mounting surface on the turret. If the inclination read by the dial indicator is larger than 0.02 mm (0.0008 in.), correction is required. The procedure to make corrections is explained in Item b).

Checking offset of turret

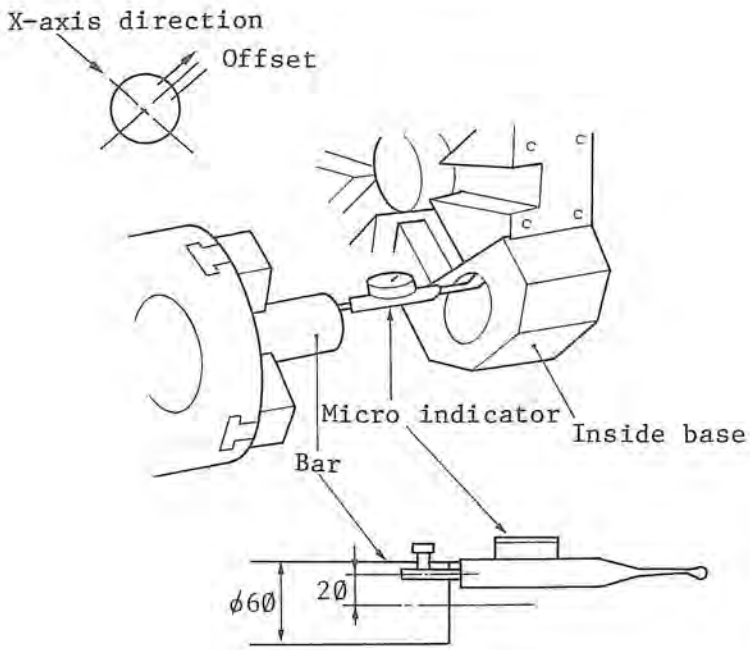

Fig. 4-17

Mount the inside base holder on the turret in the manner as illustrated in Fig. 4-17. Check the center position of the hole on the inside base holder using the micro indicator set in the chuck to chuck the offset or misalignment of the hole on the inside base holder from the spindle center. Alignment of the spindle center and the inside base holder hole center in the X-axis direction must be adjusted in advance. The offset amount is one half the error read by the micro indicator. If offset amount is larger than 0.05 mm (0.002 in.) make corrections in accordance with the procedure explained in item c).

2) Accuracy inspection of headlock

Finish a test piece indicated in Fig. 4-18 at the right in the MDI mode operation to check the cylindricity. If the measured cylindricity is larger than 0.01 mm/150 mm (0.0004 in./5.91 in.), adjustment of the headstock is necessary. For the procedure to adjust the headstock, refer to Section 4-6-3 in this Manual. This adjustment should be carried out in combination with the adjustment for offset.

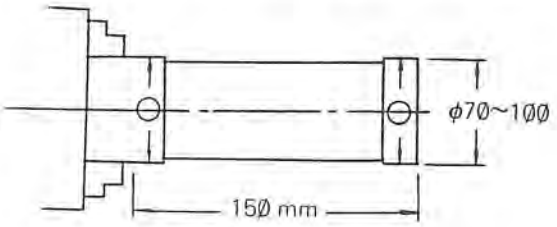

Fig. 4-18

Cutting conditions

Material:	Mild steel (S45C, JIS) or cast iron (FC, JIS)
Depth of cut:	φ0.2 mm (φ0.008 in.)
Feedrate:	0.1 mm/rev. (0.004 mm/rev.)

3) Headstock accuracy accuracy adjustment should be carried out in the following order:

Inclination of turret

↓

Headstock accuracy

↓

Misalignment of turret

b) Correcting turret inclination

If turret inclination amount measured as per Fig. 4-17 is larger than 0.02 mm (0.0008 in.), adjustment should be made in the manner indicated below:

1) Remove covers (1) and (2).

2) Loosen the four turret clamping screws (3). Note that turret clamping screws (4) and (5) should not be loosened.

3) Remove the two plugs (6) from two taper pin holes.

4) It is recommended to chamfer the front edge of the taper pin and screw in a bolt into the threaded hole in the taper pin before inserting the taper pin into the taper pin hole.

5) After loosening the turret clamping screw (5) satisfactorily, drive in the taper pin into the taper pin hole while tapping the turret with a soft head hammer. See note (*) below.

6) After the two taper pins have been inserted, secure the turret clamping screws (3), (4) and (5).

7) Check the turret inclination as per Fig. 14-16 again.

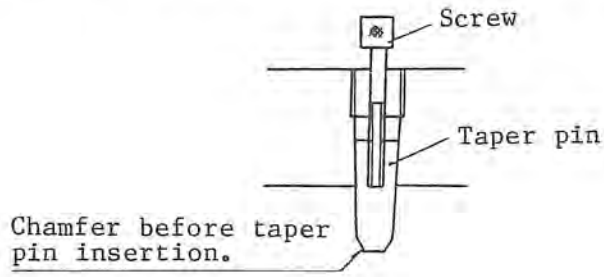

Fig. 4-19

8) When the inclination of the turret is adjusted within the allowable range, remove the taper pins and insert the plugs into the taper pin holes after applying the sealant on them.

9) Install the covers (1) and (2). Apply the sealant to the cover mounting surfaces.

10) If inclination is acceptable at this point, remove the taper pins inserted in step 6) above, and insert the plugs. (The plugs should be coated with sealant.)

11) Prepare a taper reamer, and clean out taper pin hole (7). If bush (8) has been removed, first tap it in.

12) Prepare two new 8 x 32 taper pins and tap them into hole (7).

13) Screw in plug (7) which had been removed. (The plug should be coated with sealant.)

14) Attach covers (1) and (2). The cover mounting surface should be coated with sealant.

This completes the operation.

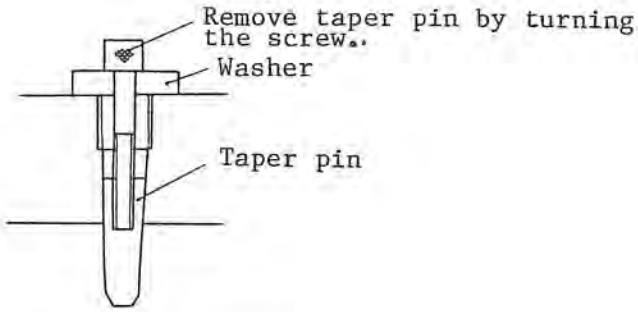

Fig. 4-2Ø

This completes the adjustments.

Note (*): In actual adjustment operations, there are cases where turret inclination cannot be corrected by simply driving the taper pin. In these cases, follow the steps below.

i) Loosen the turret clamping screw (4) also and tap the turret head with a soft head hammer to drive the taper pins into taper pin holes on the turret head. Follow the steps 8) - 14), then.

ii) If the procedure i) has no satisfactory results, loosen the turret clamping screw (4) with one of the two taper pins inserted. Then, tap the turret head with a soft head hammer.

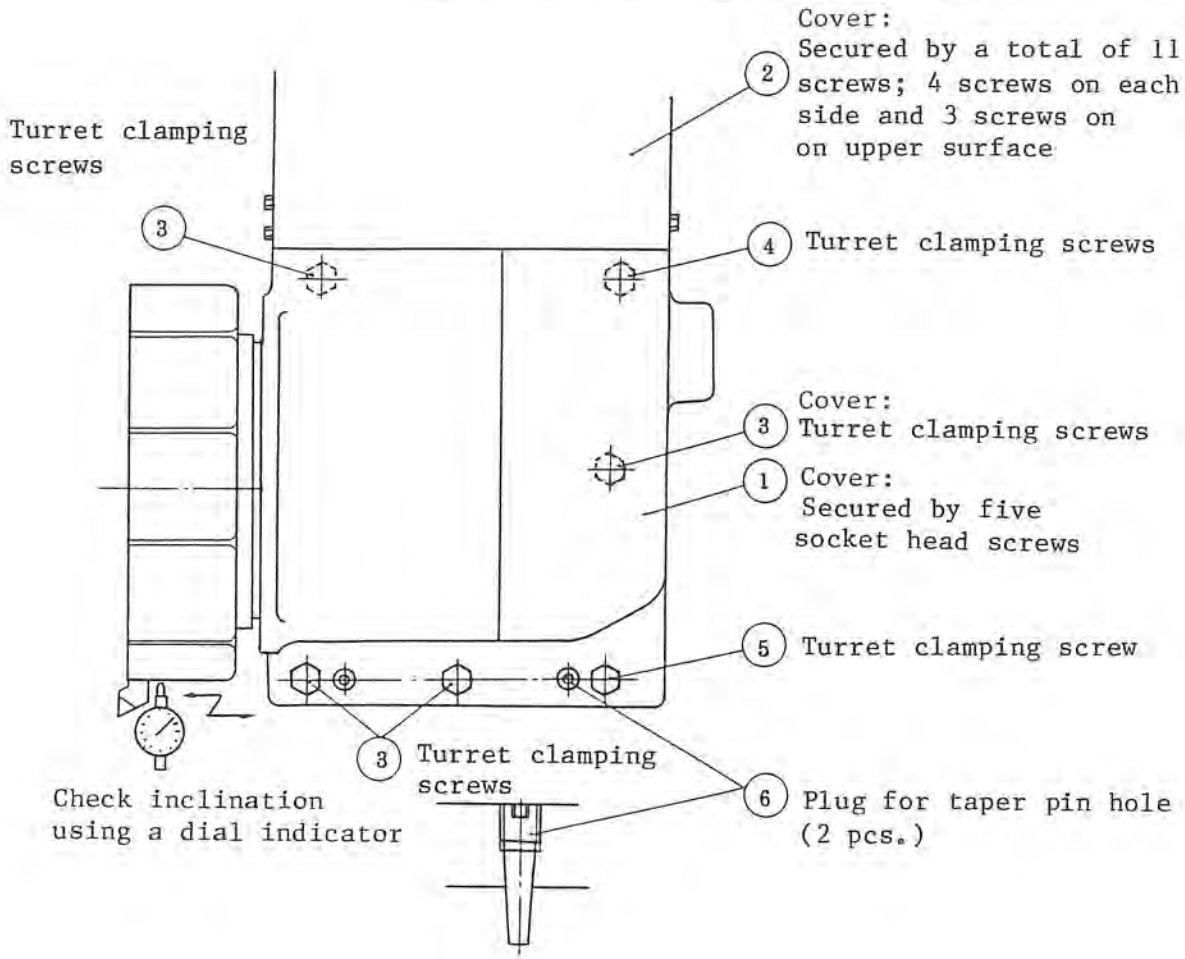

Fig. 4-21

c) Correcting turret offset

If offset amount measured as per Fig. 4-17 is larger than Ø.Ø5 mm (Ø.ØØ2 in.), make corrections following the steps below: (Refer to Fig. 4-22.)

1) Turn off power.

2) After removing the six screws (1), detach the tool number name plate (2). Make tool number identification on the turret.

3) Remove screw (3) and detach the cap.

4) Loosen the six turret clamping bolts (5).

5) Prepare the two taper pins with female thread (6), ø8 x 45 mm, and drive fit them while tapping the turret with a soft-head hammer. It is recommended to screw the bolt into the female thread of the taper pin in advance.

6) After the two taper pins have been driven into the turret head, secure the turret head clamping screws tight.

7) Turn on power.

8) Measure the offset amount in the manner as illustrated in Fig. 4-7.

9) If the steps 1) through 8) cannot eliminate offset, carry out the steps below.

10) Manually rotate the turret head and turn off power supply to the OSP before the turret is indexed to the correct turret index position. This leaves the turret head unclamped. Turn off power at the main disconnect and keep the power off until the turret head is reassembled.

11) Lift the turret up with a jib crane and extract the taper pins (7). Then, remove bolt (8).

12) Detach the turret head.

13) Loosen all clutch clamping screws (9) on the turret head and turret base and then remove taper pin (10).

    For the procedure to remove the taper pin, refer to p. 60.

14) Prepare two taper pins with female thread, ø6 x 36 mm, and drive fit them into the taper pin holes.

15) Tighten clutch securing screw (7).

16) Finish the two taper pin holes (12) with a taper reamer and drive the taper pin ø8 x 36 mm into the taper pin hole. If the taper pin removed in step 13) is stepped or bent, replace it with a new one. If the taper pin is inserted too deeply, use a little longer taper pin.

17) remove taper pins (6) and (11).

18) Reassemble the turret head in the reverse order of steps 11) and 12). Apply grease to the clutch teeth.

19) Turn on power and check turret indexing operations in the MDI mode.

2Ø) Measure the offset amount again as illustrated in Fig. 4-17.

21) Reassemble the cap and tool number plates in the reverse order of 2) and 3). Make sure that O ring (13) in the cap (4) is correctly set.

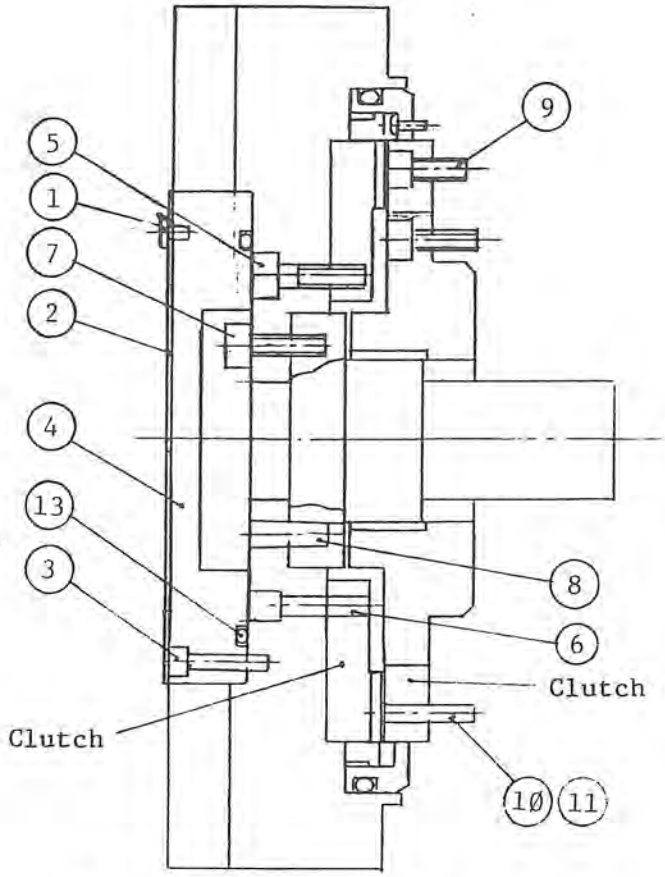

Turret Head Construction

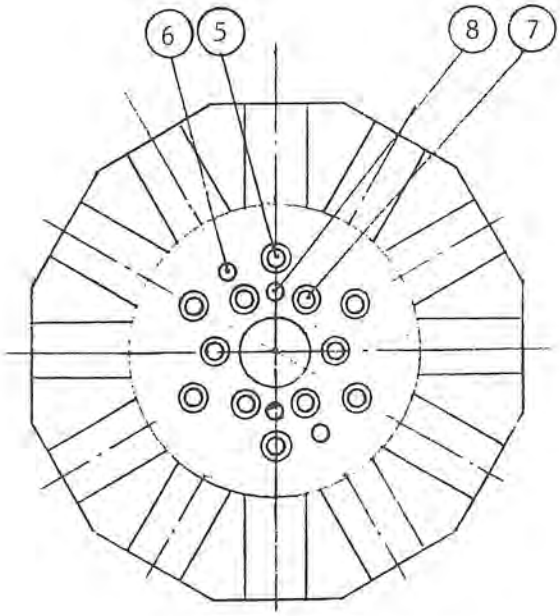

Clutch Clamp on Turret Head

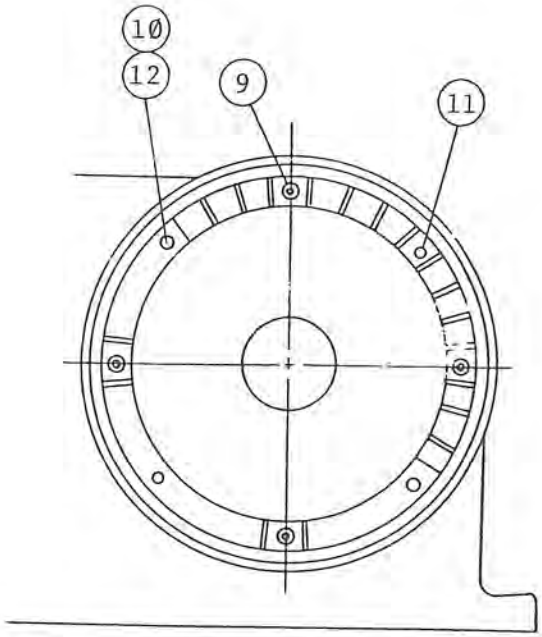

Turret Base Clutch

Fig. 4-22

4-7-3. Replacing Shear Pin

This model has shear pins for spindle drive mechanism and X- and Z-axis drive systems to protect the turret, ball screws and other mechanical parts from excessive load caused by collision, etc. If a shear pin has been broken, replace it in the following procedure.

(1) Replacing X-axis Ball Screw Shear Pin

a) Remove the X-axis brake cover and the brake. Since the turret will fall, place a wooden block below the turret to prevent turret falling down.

b) Remove the lid on the inspection window.

c) Detach the brake mounting plate.

d) Set the 8 mm (Ø.31 in.) square size box wrench at the end of the X-axis ball screw and rotate the ball screw until the shear pin is observed through the upper window.

Turn the timing belt by hand viewing through the inspection window until the shear pin position is matched.

e) Loosen the shear pin locking screw through the inspection window.

f) Remove the broken shear pin using an M4 screw.

g) Insert a new shear pin. Align the notch on the collar and the notch on the pulley.

h) Secure the shear pin locking screws. Install the brake mounting plate.

i) Reinstall the X-axis brake.

j) Reinstall the cover.

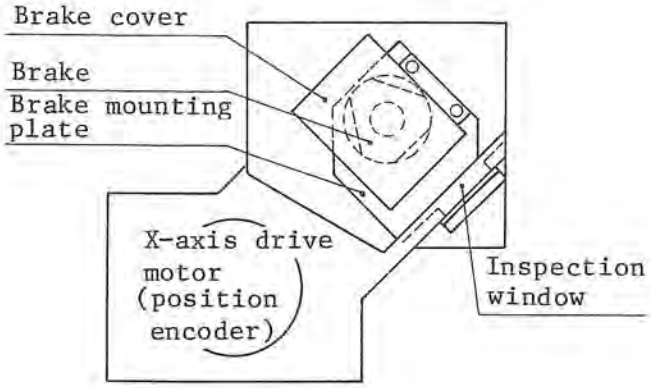

Fig. 4-23

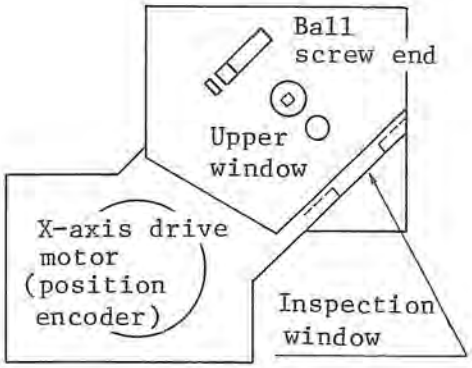

Fig. 4-24

Outside View

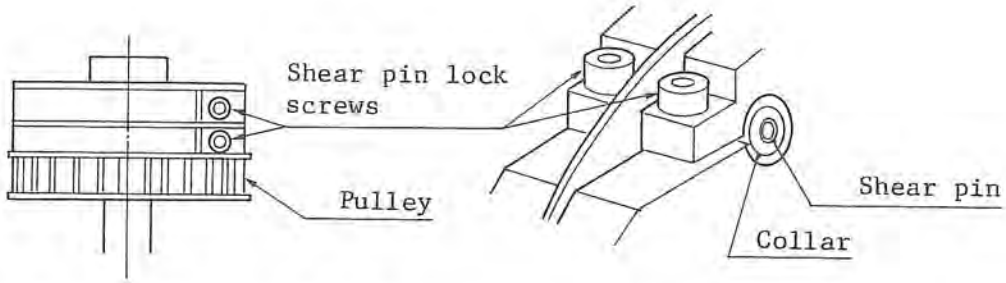

Fig. 4-25 View from Inspection Window Fig. 4-26

(2) Replacing Z-axis Ball Screw Shear Pin

a) Remove the cover for the inspection window and the belt.

b) Turn the gear outside the ball screw pulley by hand to bring the shear pin to the position visible through the inspection window.

Bring the shear pin inside to the same position by turning the timing belt by hand.

c) Loosen the shear pin lock screws.

d) Remove the broken shear pin using an M4 screw.

e) Install a new shear pin. Align the notch on the collar and the notch on the pulley.

f) Secure the shear pin lock screws.

g) Reinstall the cover.

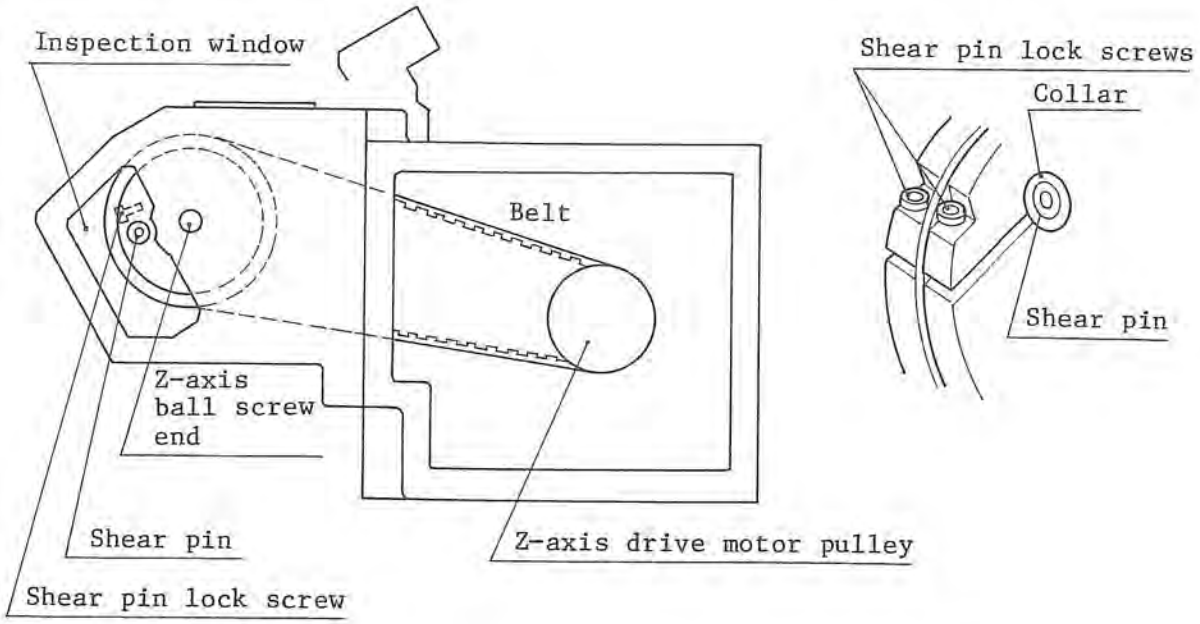

Fig. 4-27

(3) Replacing Shear Pin on Spindle Drive Shaft

a) Remove the left cover on the headstock.

b) Loosen the shear pin lock screw on the spindle drive shaft pulley.

c) Remove the two broken shear pins using an M4 screw.

d) Insert two new shear pins. Align the notch on the collar and the notch on the pulley.

e) Secure the shear pin lock screw.

f) Reinstall the cover.

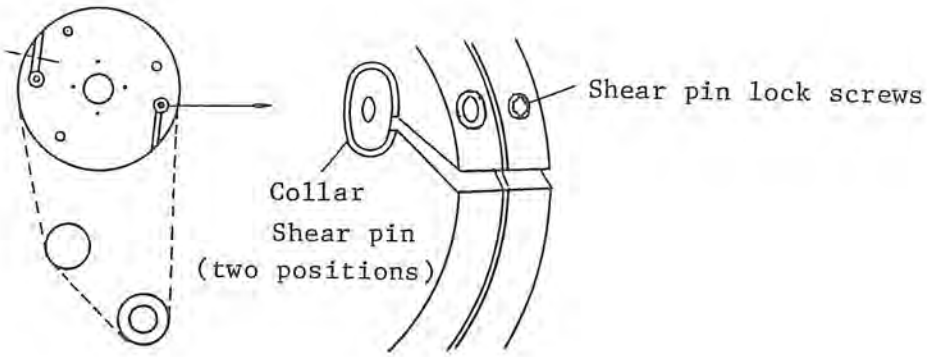

Fig. 4-28

4-7-4. Others

(1) No Lube Flow to Guideways

Lube oil is not consumed in one to two days.

↓

Lubrication pump is faulty.

↓

Adjust centralized lubrication unit.
(See Section 4-3.)

(2) No Coolant Supply

Is the coolant pump motor rotating?

→ Check the overload relay OL6 in the control cabinet if it is tripped.

↓

Is the strainer clogged?

→ Clean the strainer.
(See Section 4-4.)

↓

Is the coolant in the coolant tank filled to the specified level?

↓

Replenish the coolant.

(3) No Pressure Building-up of Hydraulic Power Unit

Is the hydraulic power unit pump motor operating?

→ Check the overload relay OL1C in the control cabinet, if it is tripped.

↓

Is the filter clogged?

→ Clean the filter.
(See Section 3-2-1.)

↓

Is the hydraulic oil in the tank filled to the specified level?

↓

Replenish the hydraulic.

SECTION 5 HANDLING AND INSTALLATION OF MACHINE

This section outlines the procedures for handling and installing your NC lathe when it has to be moved to a different area due to any change in your plant layout.

Most precautions notes may also apply to the initial installation of an NC lathe at your plant.

5-1. CARE IN HANDLING A PRECISION MACHINE

Your CNC lathe consists essentially of four major components: the machine, the electric control cabinet, the hydraulic power unit and the CNC unit. Model LB15 CNC lathe is built in one unit and it can be easily moved without separating it into consisting units.

Lifting and Moving Machine:

There are three different methods for moving the entire machine to any desired location; by an overhead crane, using lifting hooks supplied together with the machine, by a forklift truck, and by rolls over which the machine is pushed by manual labor.

(1) Lifting By Overhead Crane

The machine is lifted by three cables.

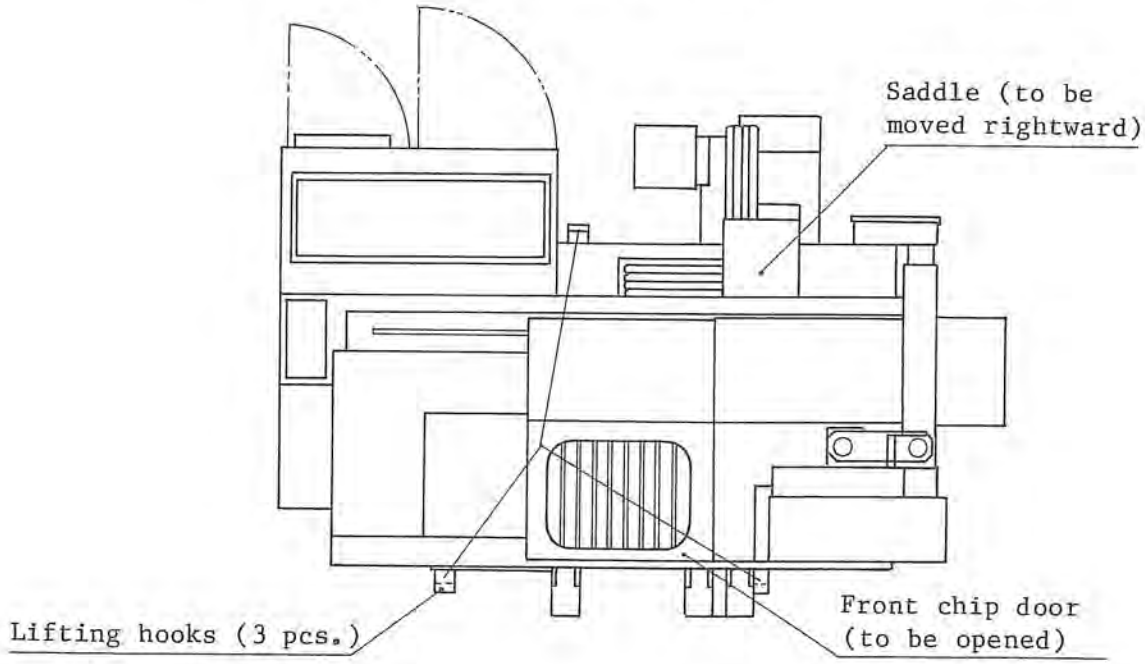

Fig. 5-1

a) Locate the saddle at the tailstock side.

b) Keep the front chip cover half opened.

c) Fix the lifting hooks in position.

This completes the preparation for machine for lifting.

Precautions for Lifting

a) Make sure that the cables are strong enough to support the weight of the machine. For machine weight of respective model, see the table.

They should have a nominal diameter of 16 mm (0.63 in.) or larger.

b) Change an angle formed by each cable line so that the cables will not contact the finished surfaces of the machine.

If this is not possible, be sure to place protective materials, such as pads, and wood blocks, between the cables and the finished surfaces of the machine to prevent them from being damaged.

c) Check for balance and be very careful when lifting the machine.

d) Use extra care to lower the machine gently onto the floor; NEVER APPLY SHOCKS TO THE MACHINE WHEN PLACING IT ON THE FLOOR.

Approximate Weight of Machine	
Without tailstock	4,200 kg (9,240 lb.)
With tailstock	4,500 kg (9,900 lb.)

(Including the hydraulic power unit, the electrical control cabinet and CNC unit.)

(2) Lifting with a Forklift Truck

a) As by the lifting with the overhead crane, locate the upper saddle to a positive limit position, the lower (if installed) to a negative limit position and the tailstock to the most retracted position. Then turn off power supply to the machine.

b) There are two recesses in the front bottom of the base and one in the rear bottom. With placing jacks in these three recesses, raise the machine until the forks of the truck can be put beneath the machine.

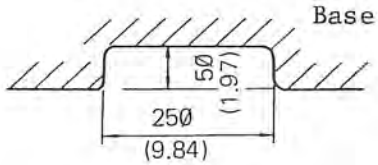

Fig. 5-2

c) With the machine raised by the jacks, have the truck approach the machine until the machine base is snug against the heel of the forks, and lift the machine for handling it to a desired area.

Precautions for Handling with a Forklift Truck

a) Be sure to use a forklift truck with sufficient lifting capacity. It is important to select a truck with the capacity adequate for lifting the weight of each model as shown in the table.

b) When setting the forks, use extra care to assure stability and balance taking the position of center of gravity (load center) of the machine into consideration.

c) Lift the machine slowly and quietly, keeping it as horizontal as possible.

d) When placing the machine on the floor, use extra care to lower it gently so as not to hit the floor.

(3) Rolling

Precautions for Rolling:

a) Place rollers evenly under the machine.

b) Be careful that the machine does not tip over on any side so that the machine base strikes the ground.

5-2. FOUNDATION REQUIREMENTS

General Precautions for Building a New Foundation

In most plants where concrete floors are solid and level, your NC lathe may be installed without anchoring it to the floor and then used satisfactorily if levelled carefully.

For a long-maintained accuracy and where sub-soil or ground under the floor is not strong enough, a new concrete foundation should be set up in accordance with the FOUNDATION PLAN attached to this Manual (See Section 5-5).

(1) Foundation requirements may very according to characteristics of the sub-soil. Under any soil conditions, it is important that the sub-soil be well compacted to keep the foundation from unsettling once the machine has been installed.

(2) Where sub-soil is too soft, it is necessary to drive concrete piles into the sub-soil.

(3) The FOUNDATION PLAN attached to this manual is prepared for laying a typical concrete foundation specifically for the machine. The concrete thickness or depth should be determined in terms of the ground condition in each case.

5-3. GENERAL PROCEDURE FOR INSTALLATION

(1) Place levelling plates, 150 x 150 x 19 mm (5.91 x 5.91 x 0.75 in.) over individual foundation bolt-holes.

Refer to the FOUNDATION PLAN.

(2) Place foundation washers (furnished together with the machine) on the levelling plates and then place the machine on them.

(3) Pass foundation bolts through the hole in the levelling plate and a center bore through the built-in jack screw assembly.

Secure each foundation bolt carefully, using a washer and a nut on its upper end.

(4) Use wedge pieces, shims, or levelling blocks under the machine base to level the machine approximately.

(5) Pour mortar into the foundation bolt holes and allow it to set.

(6) After the mixture has become hard enough, remove the shims or levelling blocks from under the machine base, and level the machine within the specified limits.

Precautions for Installation

(1) Keep the underside of the levelling plates free from any oily substance.

(2) With levelling jack screws resting on foundation washers, the bottom surfaces of the machine base casting should be about 10 to 20 mm (0.39 to 0.79 in.) above concrete level.

(3) Fill the foundation-bolt holes with mortar so as to reach the underside of the respective levelling plates. Be sure to compact the mortar thoroughly.

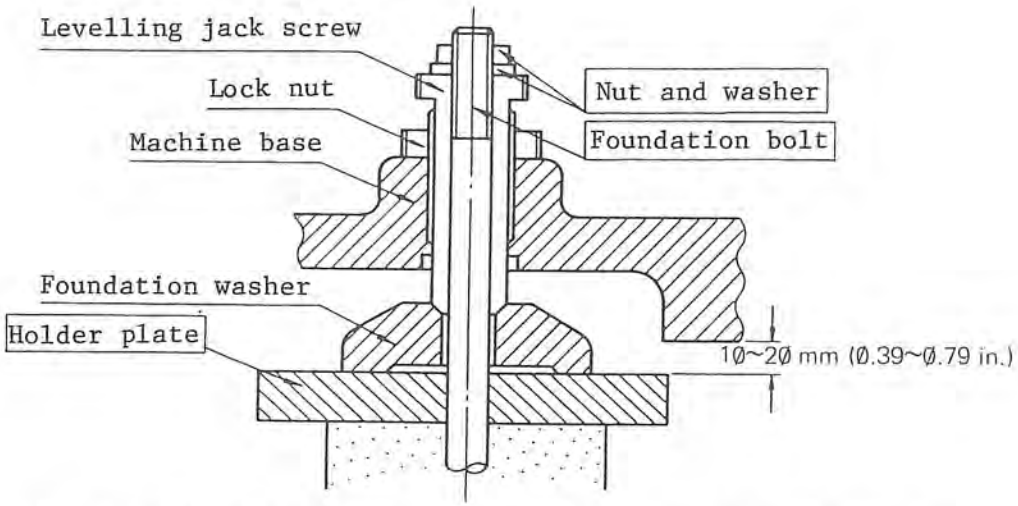

The parts with names show in [ ] are not supplied as standard equipment.

Fig. 5-3

5-4. LEVELLING THE MACHINE

The machine must be carefully levelled becaused the accuracy of the level at the initial installation will greatly affect the working accuracy and the service life of the machine.

No. of levelling jack screws	Remarks
8	Hollow for passage of foundation bolt

Levelling Procedure

(1) Measure the machine level at both right and left ends of bedways in the X- and Z-axis directions.

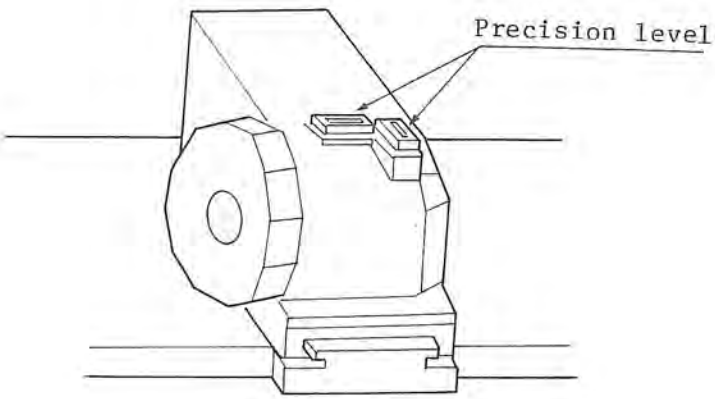

Fig. 5-4

(2) Readings are taken on both longitudinal and transverse directions while both the levelling jack screws and the foundation bolt nut are tightened firmly.

Tolerance	:	0.04 mm per 1000 mm (0.0016 in. per 39.37 in.)
Accuracy of level:		1 div. = 0.02 mm per 1000 mm (0.0008 in. per 39.37 in.)

5-5. FOUNDATION PLAN

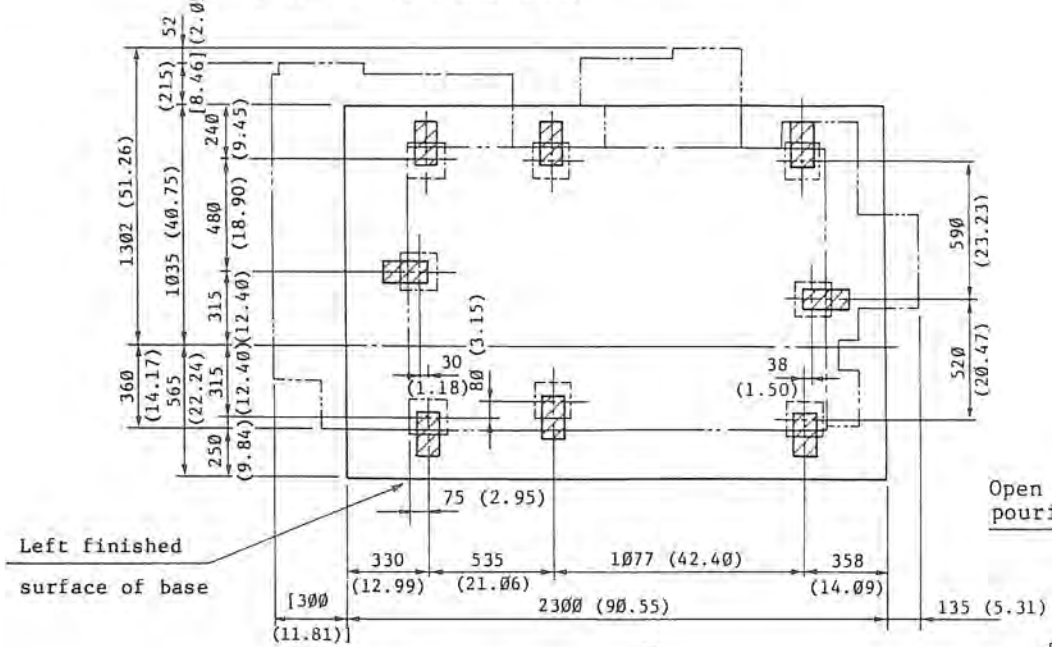

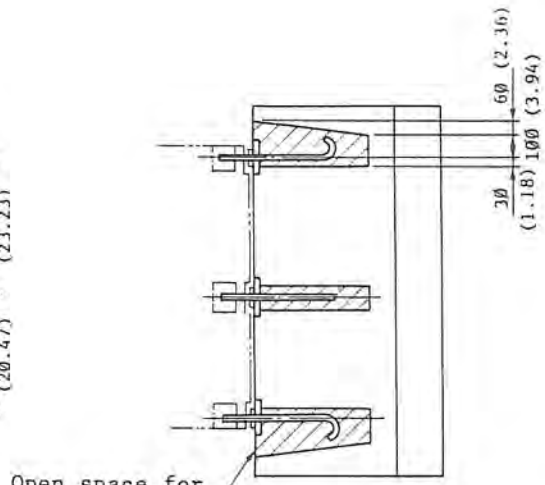

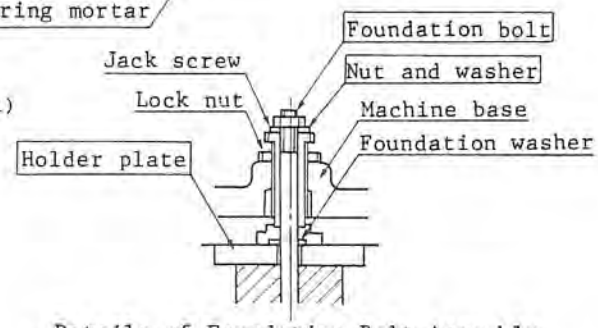

Details of Foundation Bolt Assembly

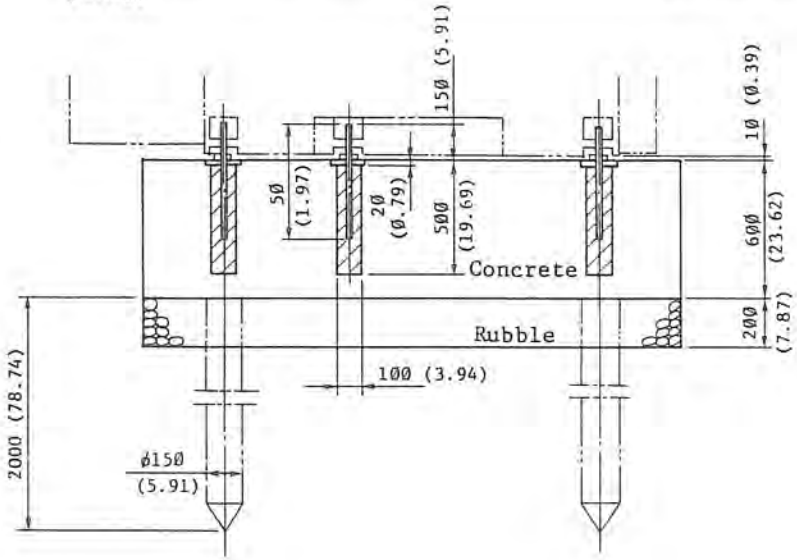

Note 1: This foundation plan is typical. Concrete thickness is determined in accordance with sub-soil conditions.

Note 2: Customers should have on hand the ☐ parts for installation of machine:

(1) Foundation bolt, M16 ..... 8 pcs.
(2) Nut and washer for above, M16 ..... 8 pcs, each
(3) Holder plate 150 x 150 x 19 mm ..... 8 pcs.
(5.91 x 5.91 x 0.75 in.)

These parts are available as options.

Unit: mm (in.)

5-6. POWER REQUIREMENTS

Power source: 3-phase, 220/380/415/440/600 V, 50/60 Hz

Main motor: AC 11/7.5 kW (15/10 HP)

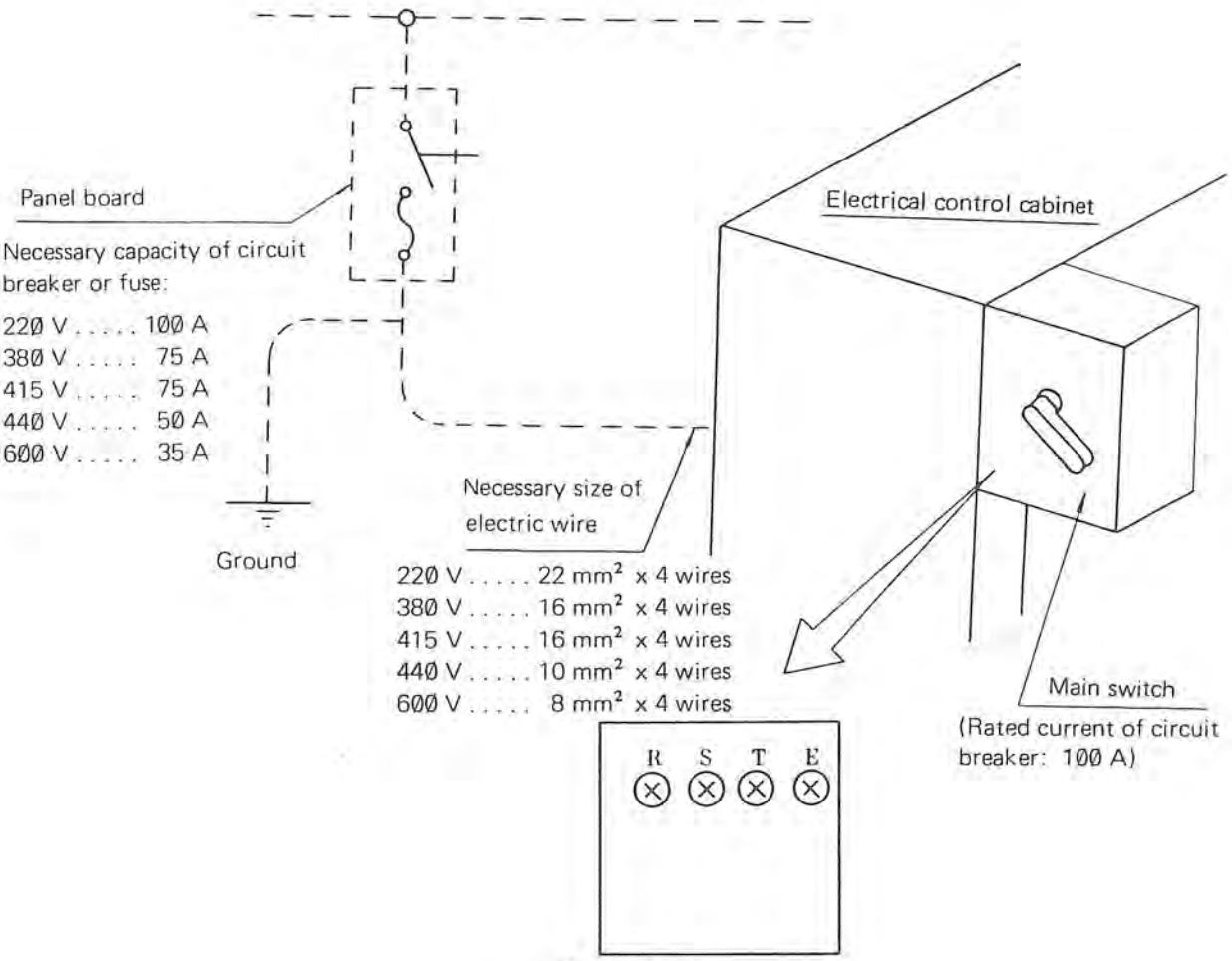

Fig. 5-5

Inspection of Cable Connection:

The operator can check correctness of cable connection by reading the pressure gauge whether it indicates the specified pressure level. Switching the selector valve of the pressure gauge to TURRET, read the pressure gauge if it indicates 30 kg/cm^2 (427 psi). When it indicates the specified pressure level, the electrical connection is correct.

SECTION 6 SPARE PARTS LIST

6-1. HYDRAULICS

No.	Part Name	Maker	Type	Dimension	Q'ty	Use	Okuma Part No.
1	Solenoid valve	Fujikoshi	S-GØ1-B3X-GRZ-D2-3Ø		1	Spindle speed change	FØØØ1-431-ØØØ-Ø7
2	Oil motor	Sumitomo	H-1ØØBA2F		1	V12 turret	FØ19-ØØØ1-56
3	Solenoid valve	Fujikoshi	S-GØ1-C6-GRZ-D2-3Ø		1	For V12 turret index	FØØØØ-445-ØØØ-Ø7
4	Solenoid valve	Fujikoshi	S-GØ1-A3X-GRZ-D2-3Ø		1	For V12 turret clamp	FØØØ1-431-ØØØ-Ø6
5	Lube oil pump	Showayuki	MLA-Ø3W, J-5Ø1		1	At the right side of machine bed	HØ12Ø-ØØØØ-86
6	Filter unit	Shoketsu	Everlasting gun-metal filter element		1	Headstock	HØØ32-1161-Ø3
7	Variable delivery pump	Fujikoshi	VDR-1A-1A2-11		1	Hydraulic power unit	FØ12Ø-61-ØØØ-Ø7
8	Line filter	Shoketsu	FH34Ø-Ø4-2Ø		1	Hydraulic power unit	HØØ32-ØØØ1-Ø8
9	Strainer	Showayuki	SH-Ø4		1	Hydraulic power unit	HØØ49-ØØØØ-29
1Ø	Pressure gauge	Toyo	AT1/4xø6Øx5ØK		1	Hydraulic power unit	TØ19-4ØØ-ØØØ-83
11	Reducing valve	Daikin	MGB-Ø2P-Ø3-5Ø-G		1/1	Hydraulic power unit Chuck/ tailstock	FØØ11-63Ø-ØØØ-17
12	Solenoid valve	Daikin	JSO-GØ2-2NP-2ØN	DC 24V	1	Hydraulic power unit Chuck	FØØØØ-442-ØØØ-14
13	Solenoid valve	Daikin	JSO-GØ2-2CP-2ØN	DC 24V	1	Hydraulic power unit Tailstock	FØØØØ-442-ØØØ 13
14	Dester plunger	Showayuki	DPB-25-Ø.1		2	Saddle	HØØ12-ØØØ4-98
15	Dester plunger	Showayuki	DPB-28-Ø.1		1	Cross-slide	HØØ12-ØØØ4-72
16	Dester plunger	Showayuki	DPB-22-Ø.1		1	Tailstock	HØØ12-ØØØ4-95

6-2. ELECTRICALS (ON MACHINE)

No.	Part Name	Maker	Type	Dimension	Q'ty	Use	Okuma Part No.
1	AC motor	FANUC	Model 6	5.5/7.5kW	1	Main spindle drive motor	E1324-715-ØØ2
2	AC motor	FANUC	Model 8	7.5/11kW	1	Main spindle drive motor	E1325-715-ØØ8
3	Coolant pump	Hitachi	CP-S251	2ØØV 25ØW	1	Coolant	FØ13Ø-Ø3-ØØØ-4Ø
4	Foot switch	Osaka Jido Denki	OFL-1-SM2C		1	Chuck operating switch in front of machine	E286Ø-119-ØØ1
5	Limit-switch	Yamatake	SL1-A		2	Spindle speed change Headstock	E3Ø19-891-Ø17
6	Limit-switch	Yamatake	SL1-D		1	Turret	E3Ø19-891-Ø18
7	Limit-switch	Yamatake	SL1-A		8	V12 turret	E3Ø19-891-Ø17
8	Limit-switch	Yamatake	1LS1-J		2	Saddle, Cross-slide (X- and Z-axis limit)	E3Ø12-891-ØØ1
9	Brake	Ogura	MNBØ.2-17		1	X-axis brake	H1Ø11-ØØØ1-62
1Ø	Fluorescent lamp	Toshiba	FL-1Ø	1ØØV, 1ØW	2	Work light	-
11	3-phase induction motor	Yasukawa	FEQ-9ØLD 200V, 1.5kW	At the right side of terminal box	1	Hydraulic power unit	E1ØØ3-892-11Ø
12	Foot switch	Osaka Jido Denki	OFL-TWY-SM2C		1	Sleeve operating switch in front of machine	E286Ø-119-ØØ6
13	Lube pump	NOP	TOP-1ME75-2-1ØMA	2ØØV	1	Headstock	FØ19-ØØØ1-22
14	BL-ACT servomotor	Okuma	BL-8OE-2Ø	1.5kW	1	X-axis drive	AØØ5-7ØØ1
15	BL-ACT servomotor	Okuma	B1-12ØE-2Ø	2.Ø kW	1	Z-axis drive	AØØ5-7ØØ3

6-3. CONSUMABLE ITEMS
(O-ring: those used on sliding parts)

No.	Part Name	Maker	Type	Dimension	Q'ty	Use	Okuma Part No.
1	Belt	Bando	Banflescrum 6-7MS-1450	6 Grooves	1	Main spindle drive motor 5.5/7.5kW	M119-0006-39
2	Belt	Bando	Banflescrum 8-7MS-1450	8 Grooves	1	Main spindle drive motor 7.5/11kW	M119-0006-34
3	Timing belt	Bando	255L050		1	Headstock (for PG drive)	M1131-05-255
4	Timing belt	Bando	STS 250S8M 800		1	X-axis drive servomotor	M119-0006-91
5	Timing belt	Bando	STS 250S8M 944		1	Z-axis drive servomotor	M119-0007-49
6	Dust seal	NOK	FU0221F0		1	Headstock shifting cylinder	H0031-0005-52
7	Packing	NOK	SPG M65.5x 78x4.8		2	V12 turret	H0031-0011-87
8	Packing	NOK	SPN M18x 26x5.5		2	V12 turret	H0031-0008-92
9	O ring	Dainichi Densen	CAP-1BE-275		1	V12 turret	H0031-0009-31
10	Wiper	Bando			1	Saddle (right rear)	H1023-0005-65
11	Wiper	Bando			1	Saddle (left rear)	H1023-0005-66
12	Wiper	Bando			1	Cross-slide (lower)	H1023-0007-01
13	Wiper	Bando			1	Cross-slide (upper right)	H1023-0007-03
14	Wiper	Bando			1	Cross-slide (upper left)	H1023-0007-02
15	Wiper	Bando			1	Saddle (left front)	H1023-0005-68
16	Wiper	Bando			1	Saddle (right front)	H1023-0005-67
17	Wiper	Bando			1	Tailstock (front)	H1023-0005-72
18	Wiper	Bando		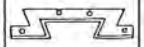	1	Tailstock (rear)	H1023-0005-73
19	Fluorescent lamp	Toshiba with other	FL-10	100V 10W	2	Work light	E3583-490-005

SECTION 7 TECHNICAL DATA

7-1. TOOLING SYSTEM
7-2. DIMENSIONS OF V12 TURRET
7-3. TOOLHOLDERS
7-4. INTERFERENCE CHART
7-5. WORKING RANGE OF MODEL (1S)
7-6. WORKING RANGE OF MODEL (1S with tailstock)
7-7. DIMENSION OF SPINDLE NOSE (ASA-A2-6)
7-8. HYDRAULIC CHUCK AND CYLINDER
7-9. HOLLOW TYPE
7-10. HYDRAULIC CIRCUIT DIAGRAM
7-11. DIMENSIONS OF TAILSTOCK (1S with tailstock)
7-12. CHIP CONVEYOR (optional)
7-13. CHIP BUCKET - L-TYPE (optional)

7-1. TOOLING SYSTEM

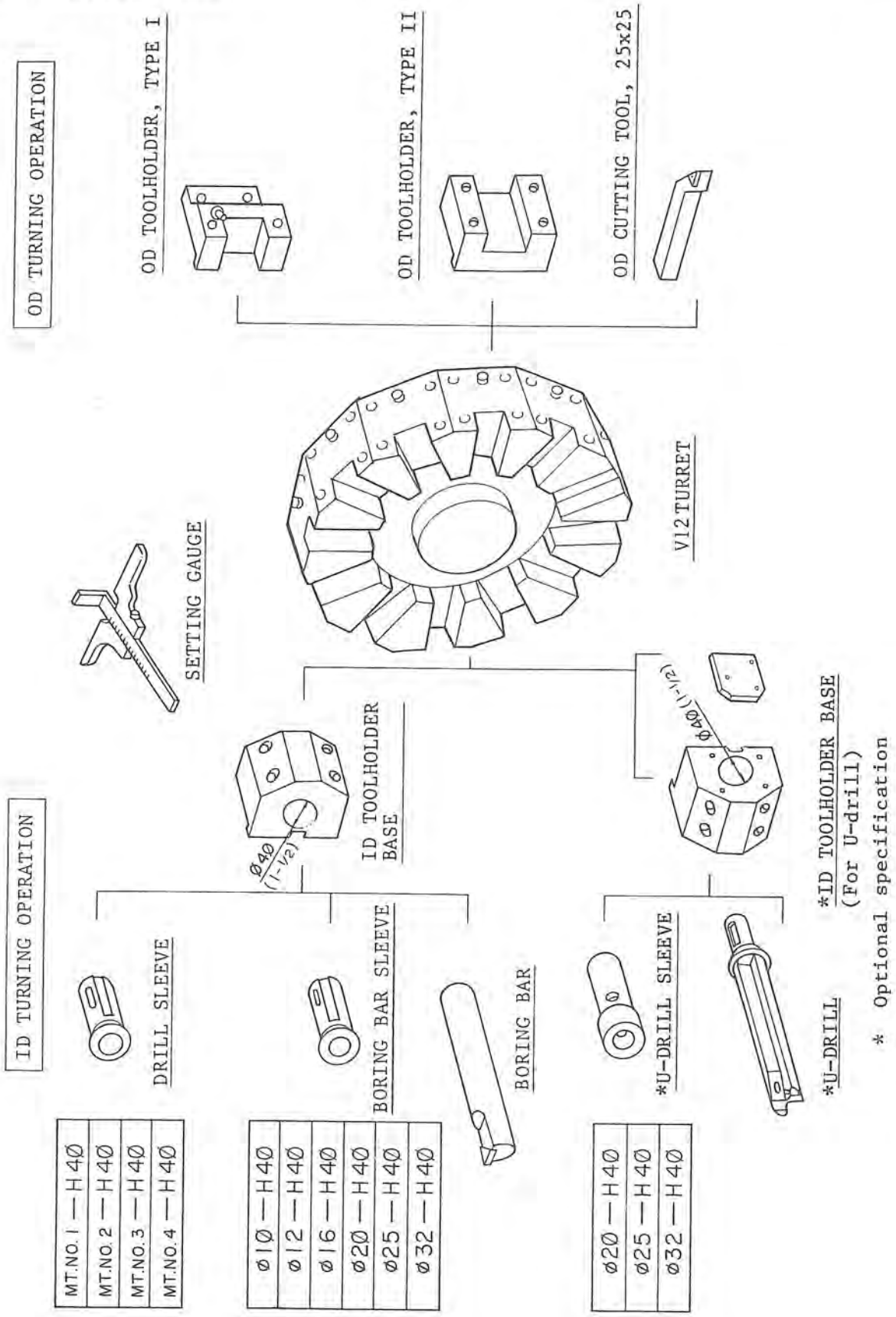

7-2. DIMENSIONS OF V12 TURRET

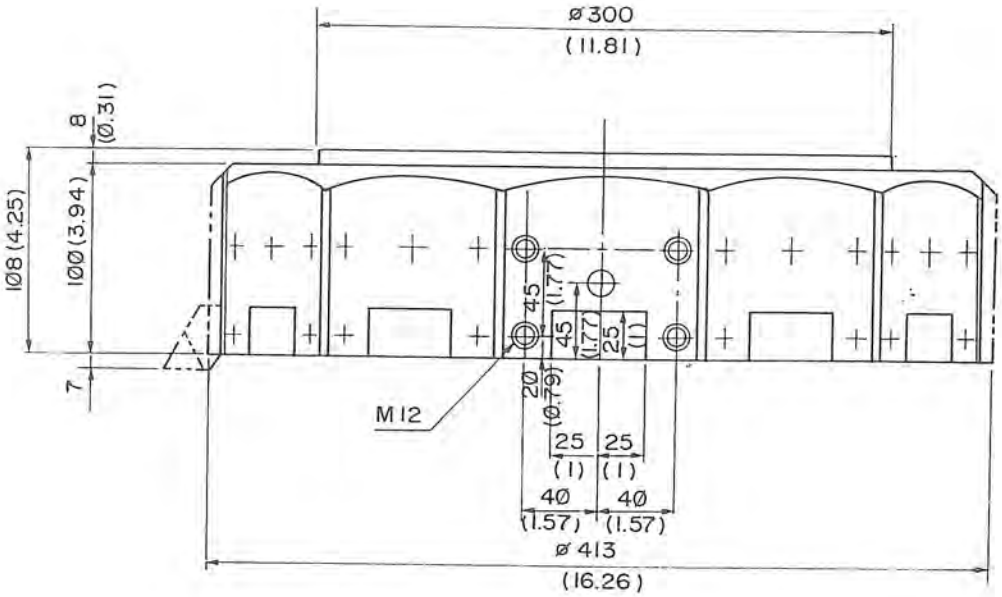

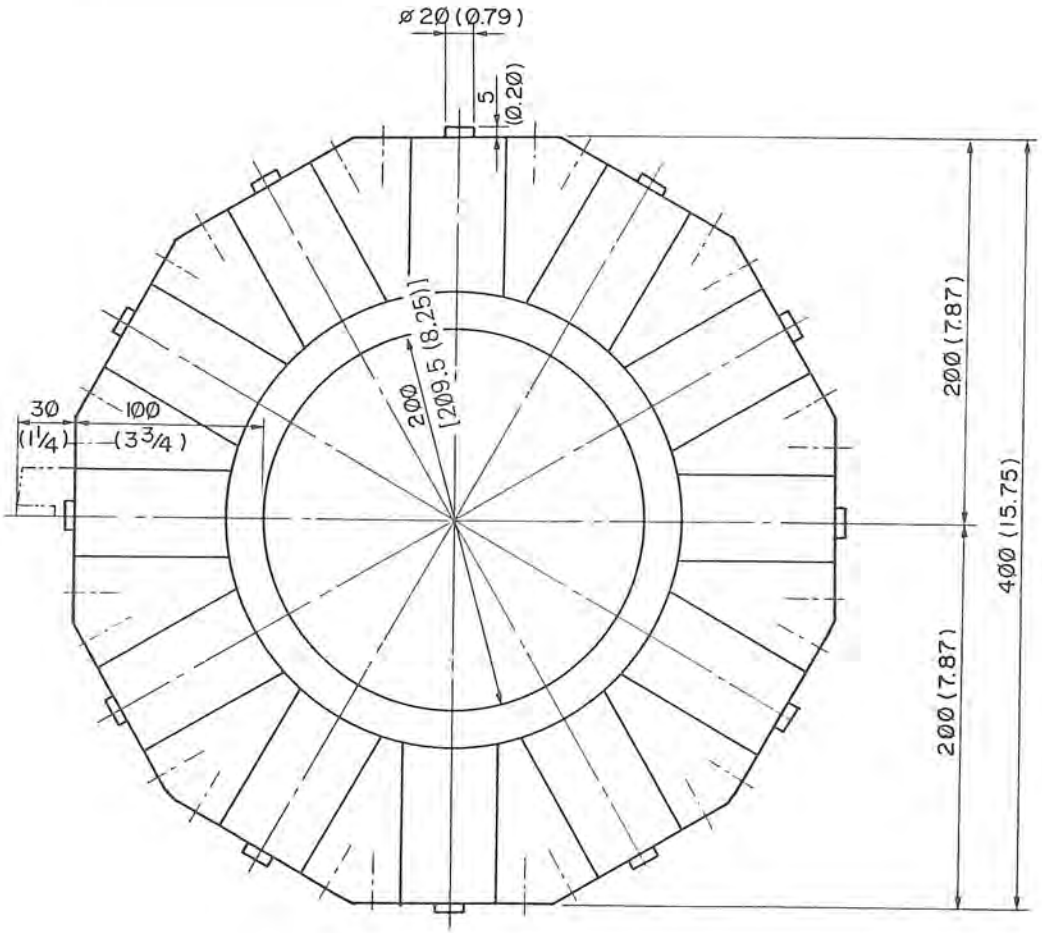

Unit: mm (in.)

7-3. TOOLHOLDERS

OD TOOLHOLDER, TYPE I

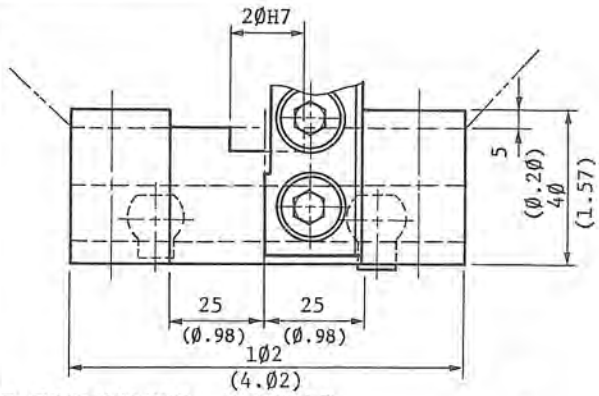

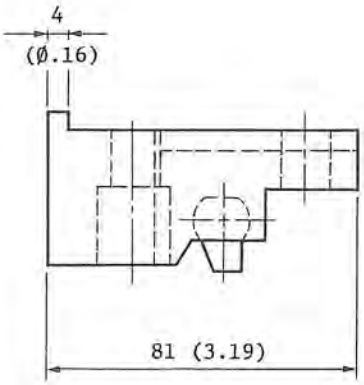

OD TOOLHOLDER, TYPE II

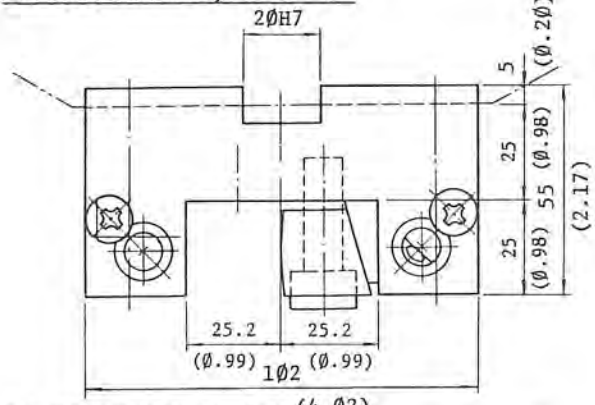

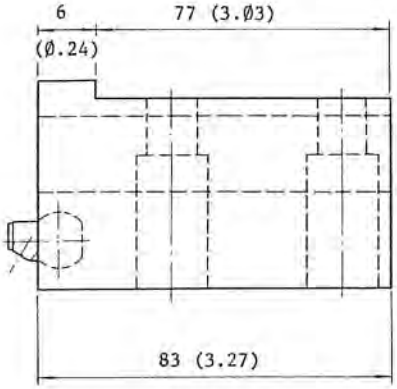

ID TOOLHOLDER BASE

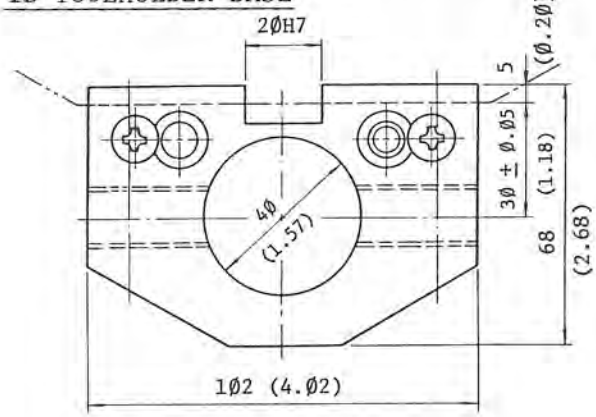

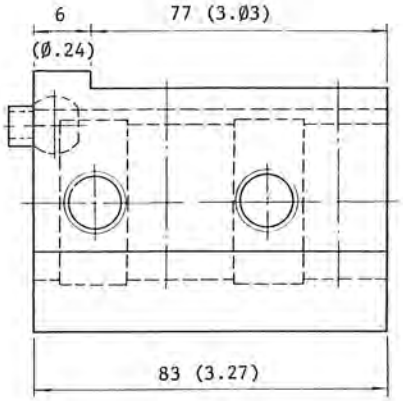

Unit: mm (in.)

DRILL SLEEVE

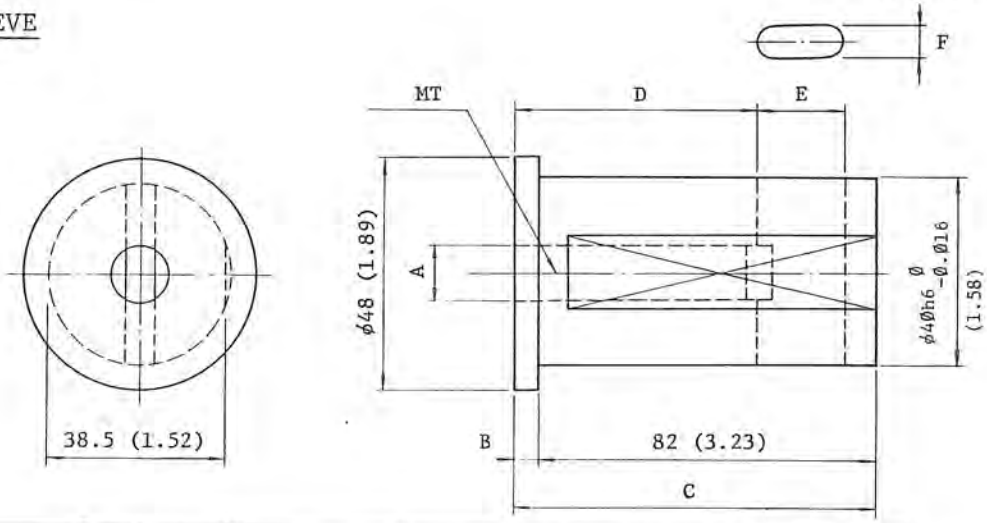

	ϕA	B	C	D	E	F
MT No.1 - H40	12.065	5(1/4)	87	52	19	5.4
MT No.2 - H40	17.780	10(3/8)	92	63	22	6.6
MT No.3 - H40	23.825	30(1 1/8)	112	78	27	8.2
MT No.4 - H40	31.267	55(2 1/8)	137	98	32	12.2

BORING BAR SLEEVE

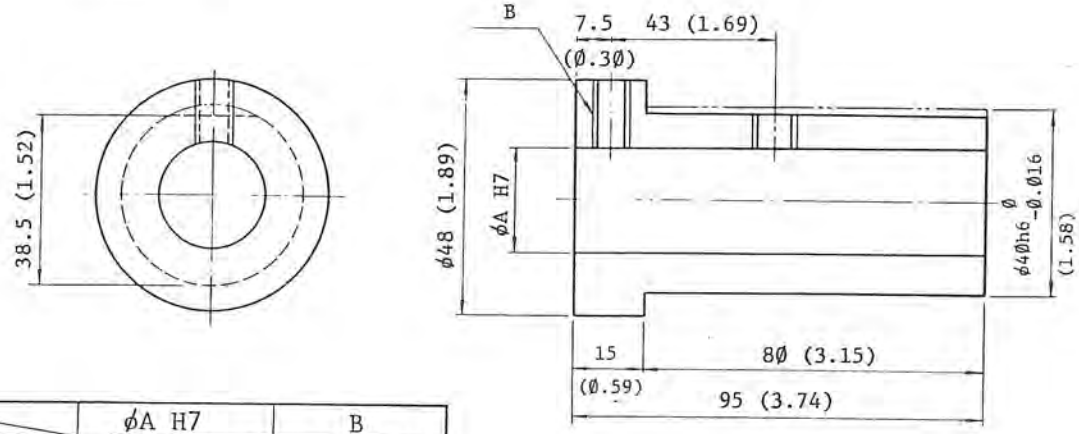

	ϕA H7	B
ϕ10 - H40	10(3/8)	M8 x 2
ϕ12 - H40	12(1/2)	M10 x 2
ϕ16 - H40	16(5/8)	M10 x 2
ϕ20 - H40	20(3/4)	M10, M8
ϕ25 - H40	25(1)	M6
ϕ32 - H40	32(1-1/4)	M6

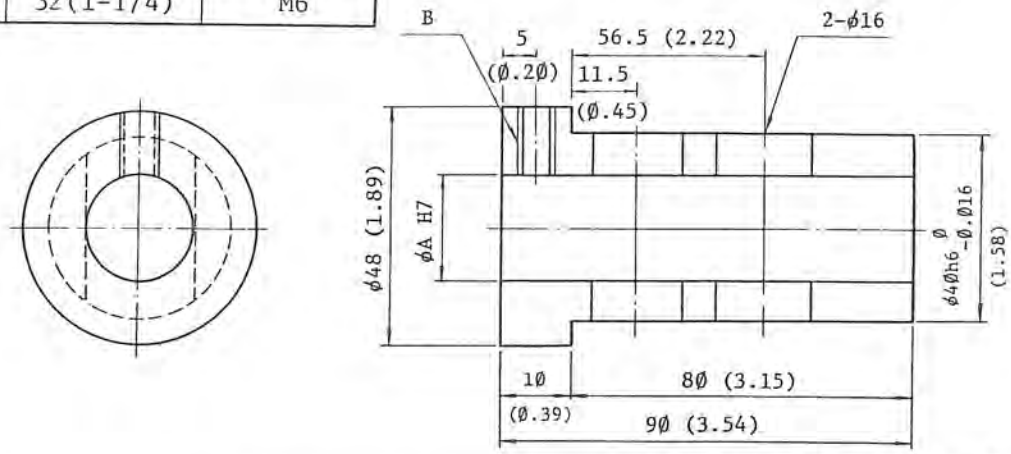

Unit: mm(in.)

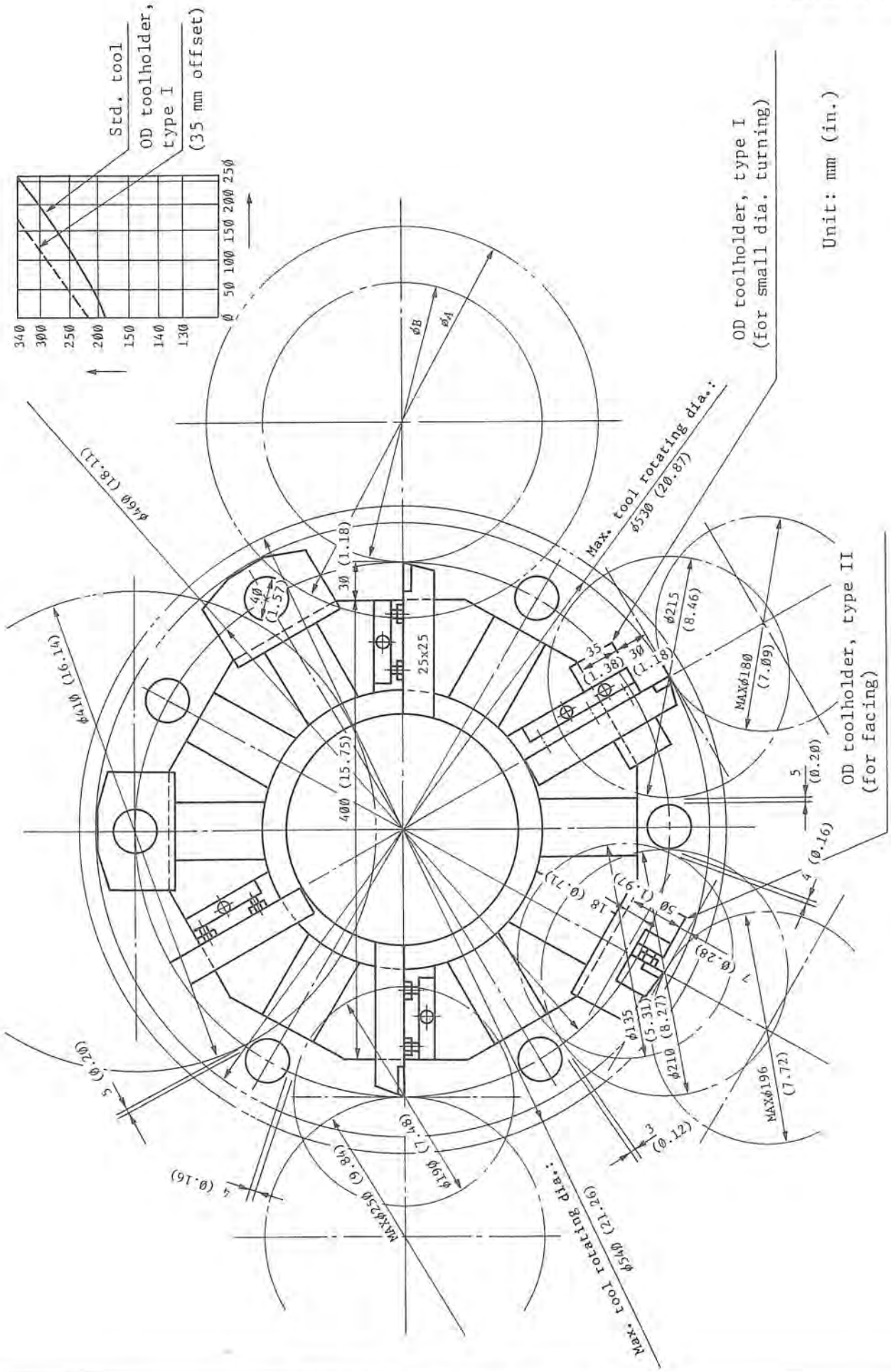
Std. tool
OD toolholder, type I
(35 mm offset)
OD toolholder, type I
(for small dia. turning)
Unit: mm (in.)
OD toolholder, type II
(for facing)
Max. tool rotating dia.:
ø530 (20.87)
ø460 (18.11)
ø410 (16.14)
Max. tool locating dia.:
ø540 (21.26)
MAXø250 (9.84)
ø190 (7.48)
MAXø196 (7.72)
ø210 (8.27)
ø135 (5.31)
MAXø180 (7.09)
ø215 (8.46)
400 (15.75)
25x25
30 (1.18)
40 (1.57)
35 (1.38)
30 (1.18)
50 (1.97)
18 (0.71)
7 (0.28)
5 (0.20)
4 (0.16)
3 (0.12)
5 (0.20)
4 (0.16)
ø B
ø A
340
300
250
200
150
140
130
0 50 100 150 200 250

7-5. WORKING RANGE OF MODEL (1S)

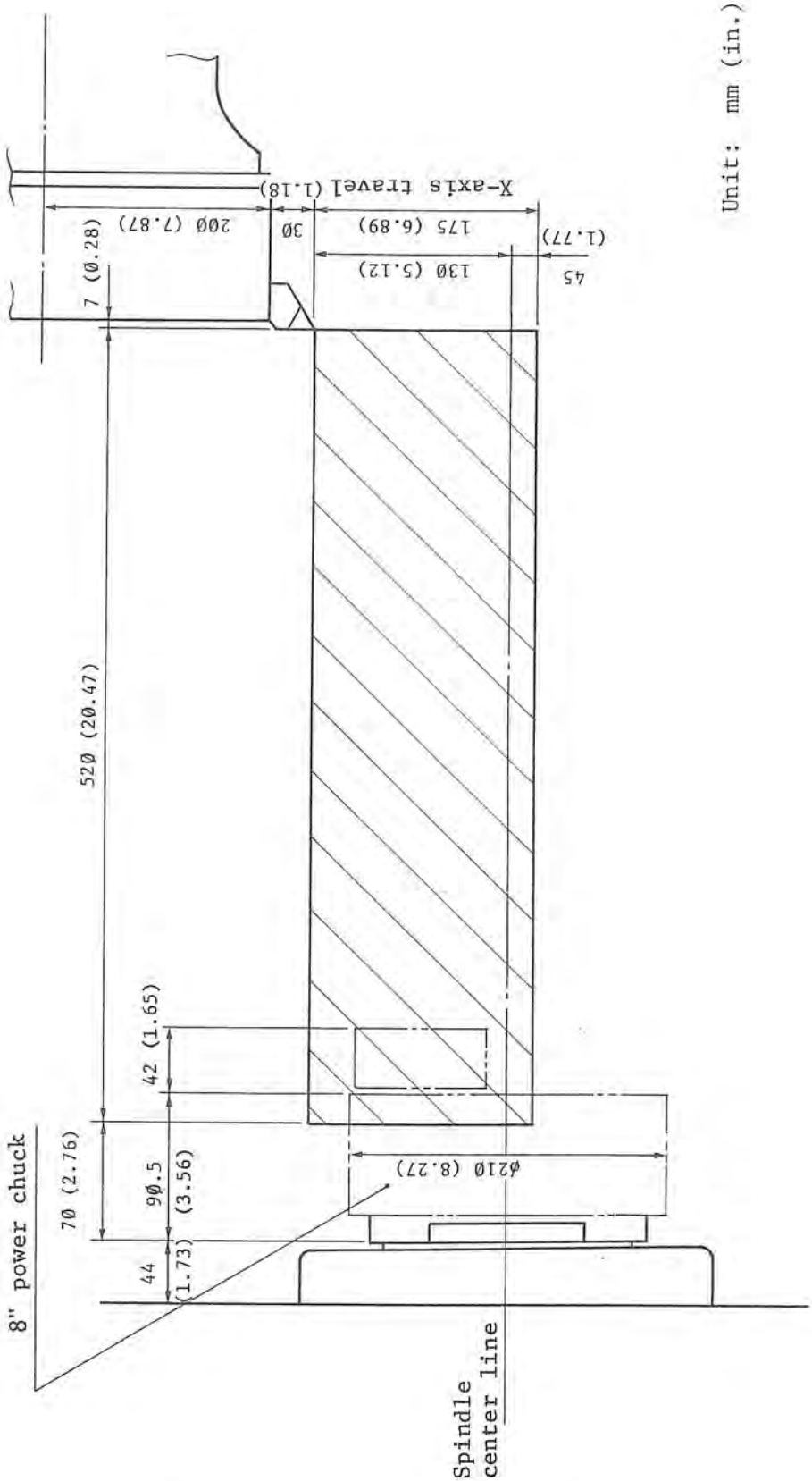

Unit: mm (in.)

Working range with standard tool projection amount: 30 mm (1.18")

7-6. WORKING RANGE OF MODEL (1S with tailstock)

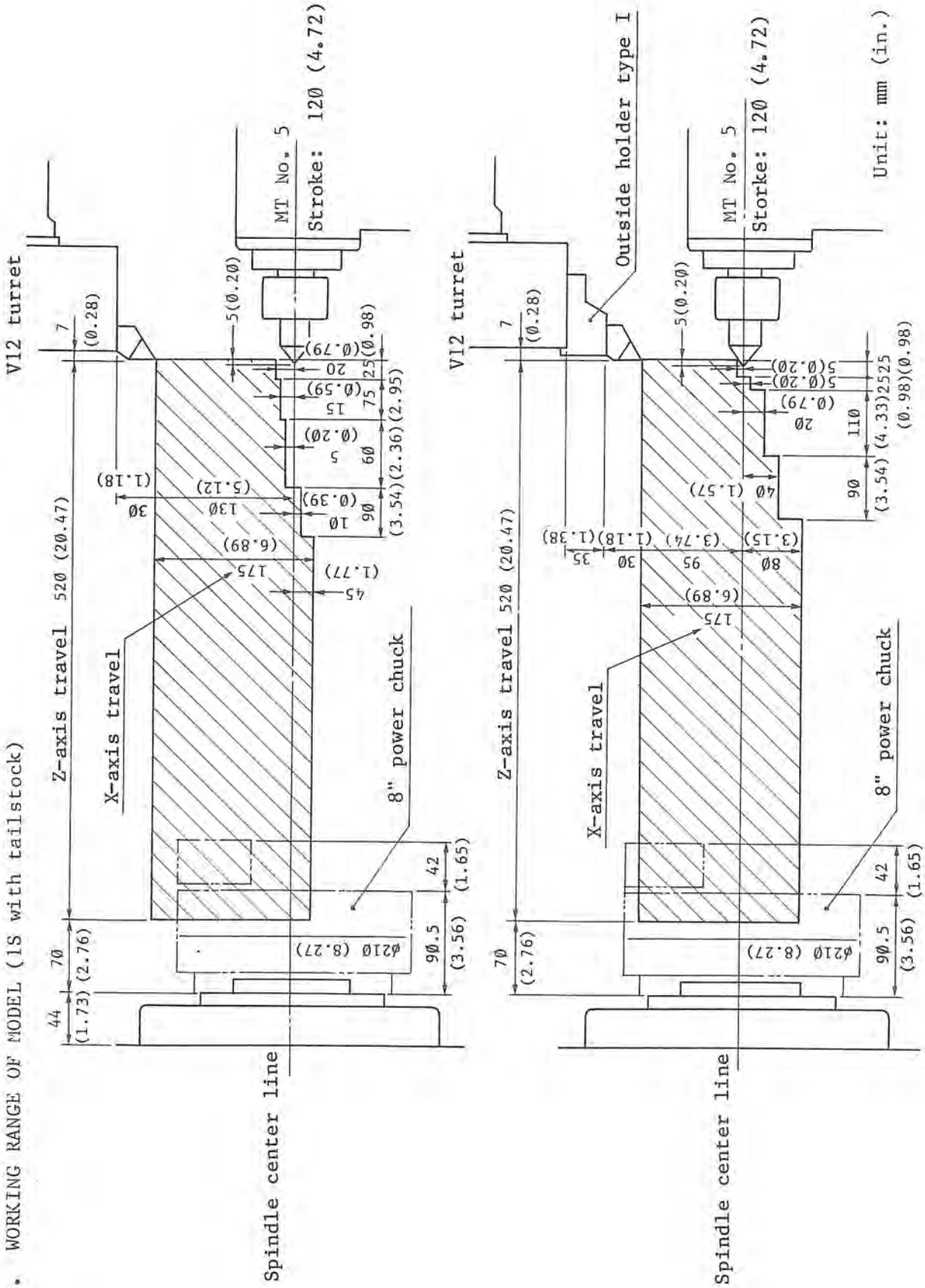

For chuck-work operation on the machine equipped with a tailstock, it working range is as shown below. Using a special cover (otpional), its longitudinal working range can be elongated by 140 mm.

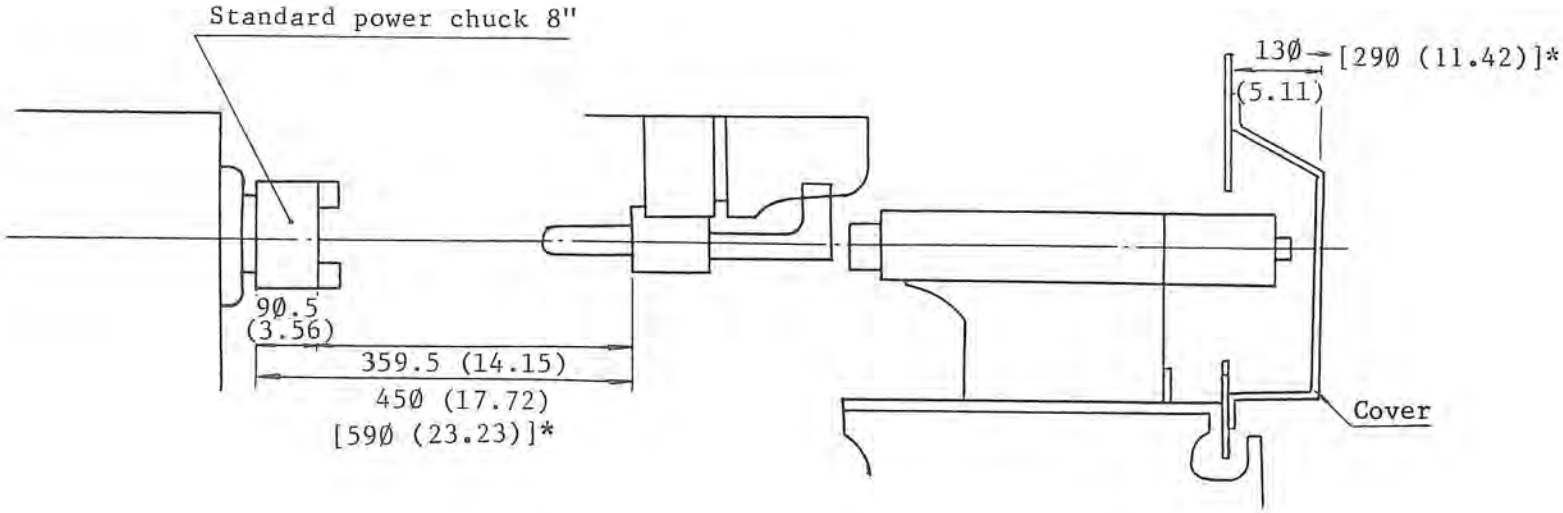

* Dimensions when optional special cover is used.

Unit: mm (in.)

Unit: mm (in.)

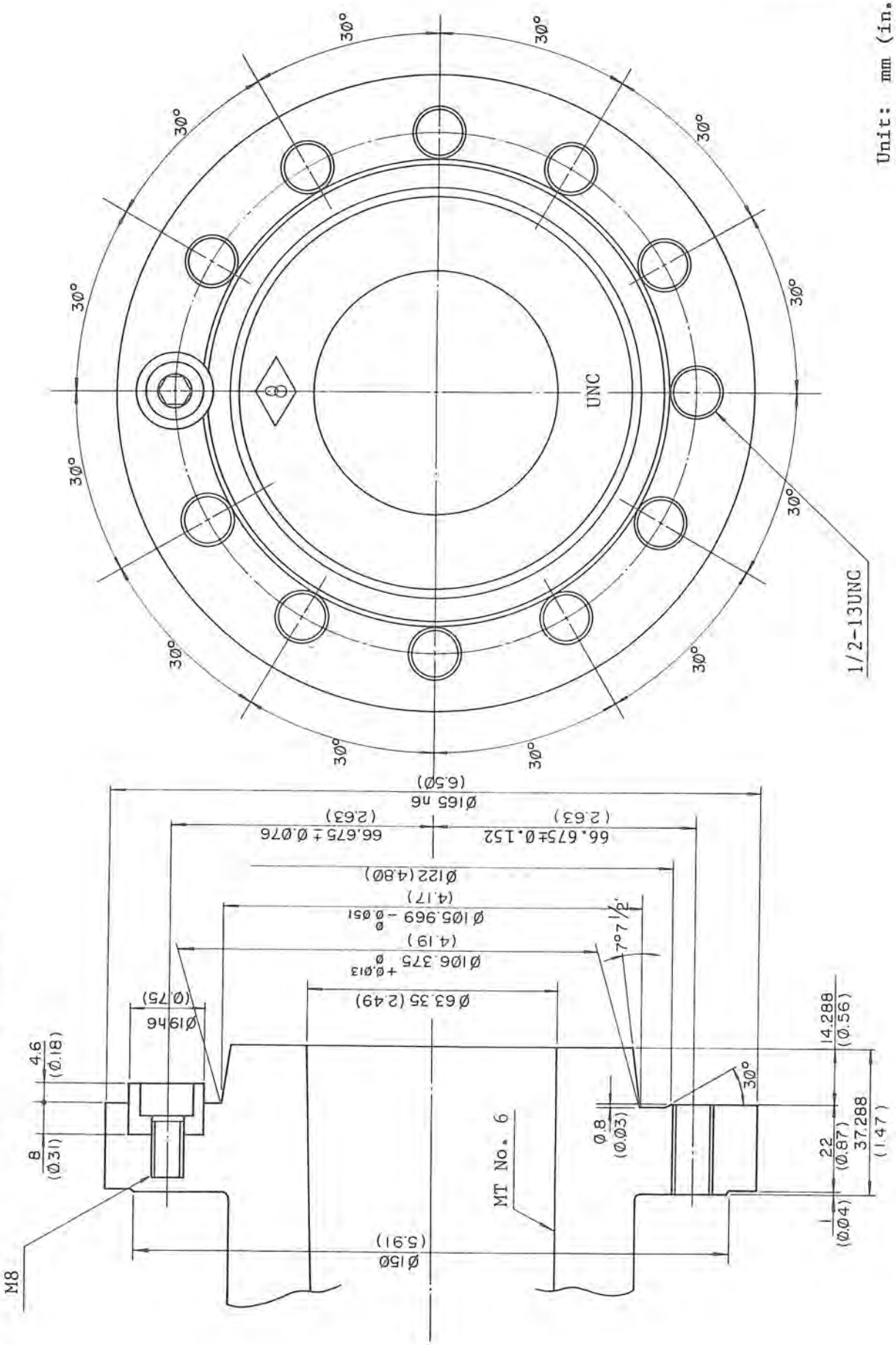

7-7. DIMENSION OF SPINDLE NOSE (ASA-A2-6)

7-8. HYDRAULIC CHUCK AND CYLINDER

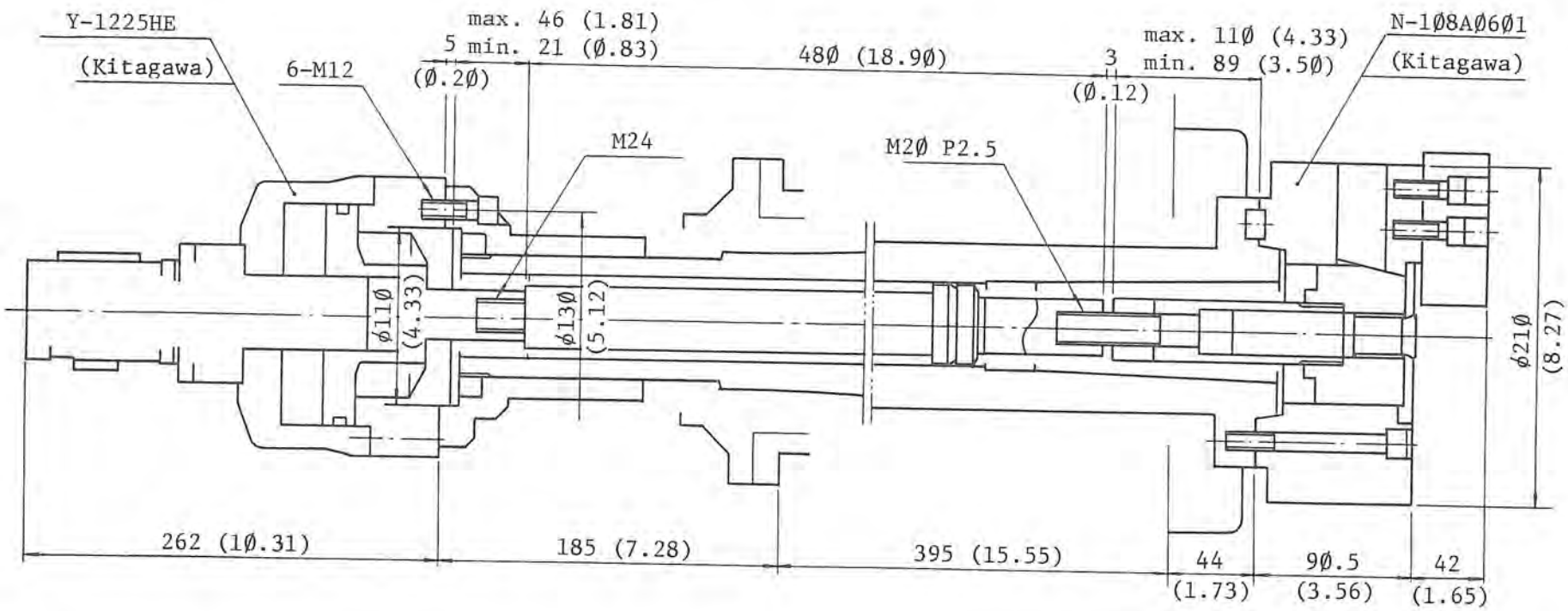

Unit: mm (in.)

ROTARY HYDRAULIC CYLINDER WITH LOCK

TYPE	Y-1225HE
Cylinder Bore	125 mm (4.92 in.)
Piston Stroke	25 mm (Ø.98 in.)
Piston Thrust	2,5ØØ kg at 25 kg/cm^2 (5,5ØØ lbs. at 356 psi)
Max. Speed	6,ØØØ rpm
Max. Pressure	25 kg/cm^2 (356 psi)
Weight	11.5 kg (25 lbs.)

HYDRAULIC POWER CHUCK

TYPE	N-1Ø8AØ6Ø1
Max. Speed	4,3ØØ rpm
Weight	25 kg (55 lbs.)
Jaw Stroke	8.8 mm (Ø.35 in.) (in diameter)
Cylinder Thrust	2,7ØØ kg (5,94Ø lbs.)
Clamp Force/Jaw	2,7ØØ kg (5,94Ø lbs.)
Max. Pressure	27 kg/cm^2 (384 psi)

7-9. HOLLOW TYPE

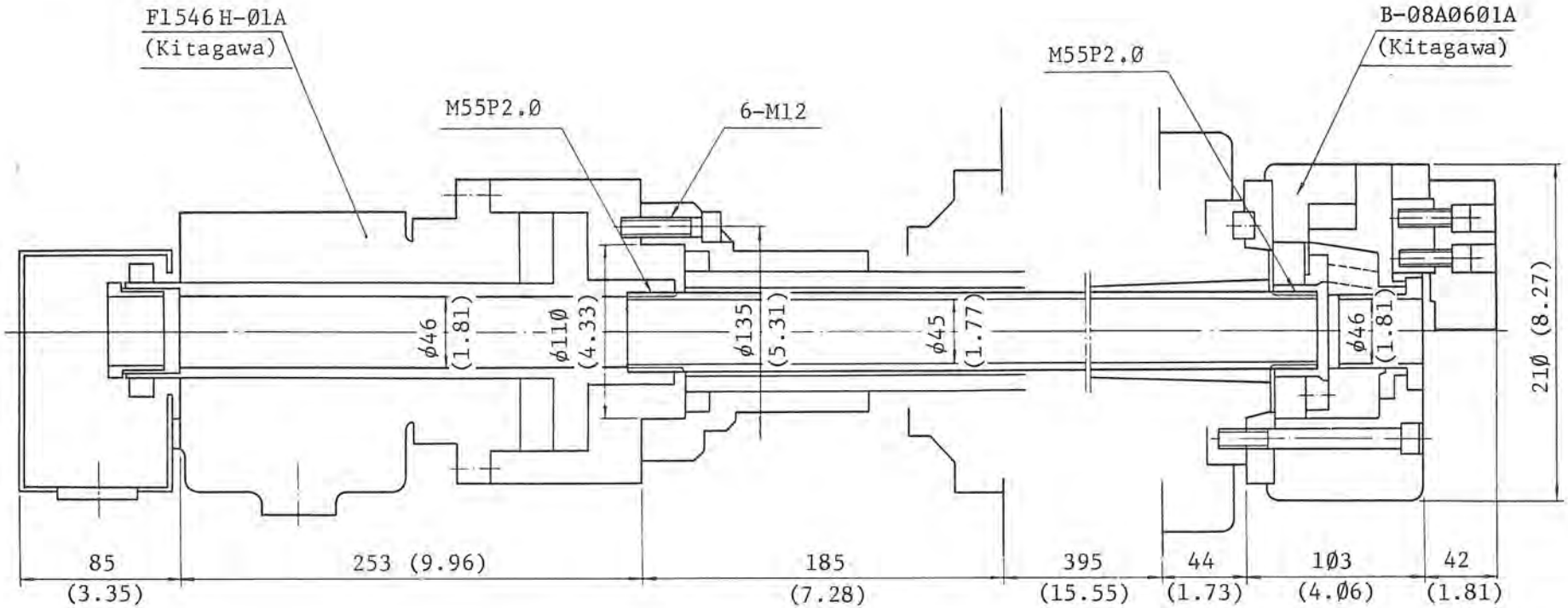

Unit: mm (in.)

ROTARY HYDRAULIC CYLINDER WITH LOCK

TYPE	F1546H-01A
Cylinder Bore	155 mm (6.10 in.)
Piston Stroke	19 mm (0.74 in.)
Piston Thrust	3,240 kg at 23 kg/cm^2 (7,128 lbs at 327 psi)
Max. Speed	6,000 rpm
Max. Pressure	27 kg/cm^2 (384 psi)
Weight	22 kg (48.4 lbs.)

HYDRAULIC POWER CHUCK

TYPE	B-08A0601A
Max. Speed	4,200 rpm
Weight	27 kg (59 lbs.)
Jaw Stroke	7.4 mm (0.29 in.) in diameter
Cylinder Thrust	3,240 kg (7,128 lbs.)
Clamp Force/Jaw	2,700 kg (5,940 lbs.)
Max. Pressure	23 kg/cm^2 (327 psi)

7-10. HYDRAULIC CIRCUIT DIAGRAM

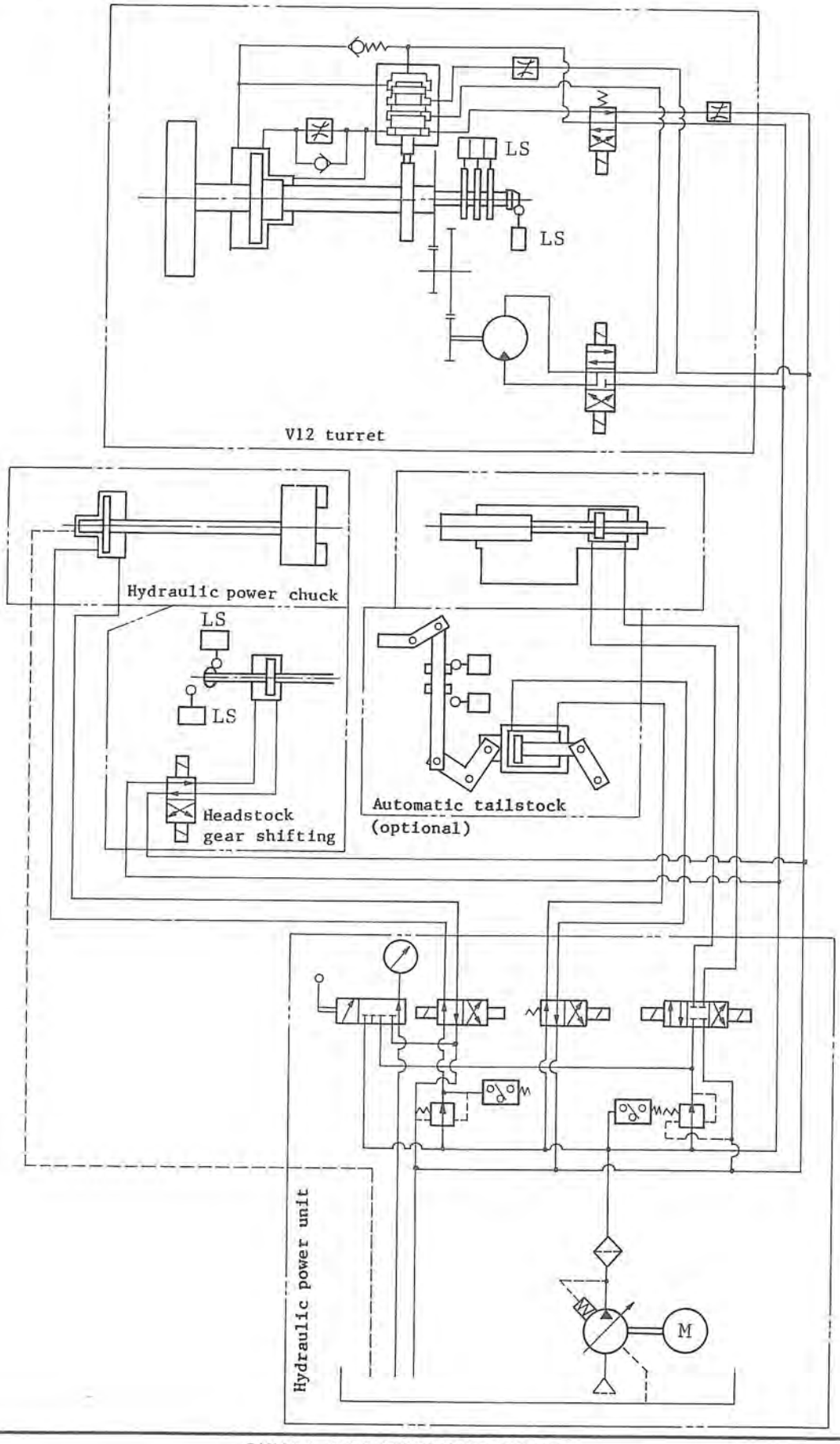

7-11. DIMENSIONS OF TAILSTOCK

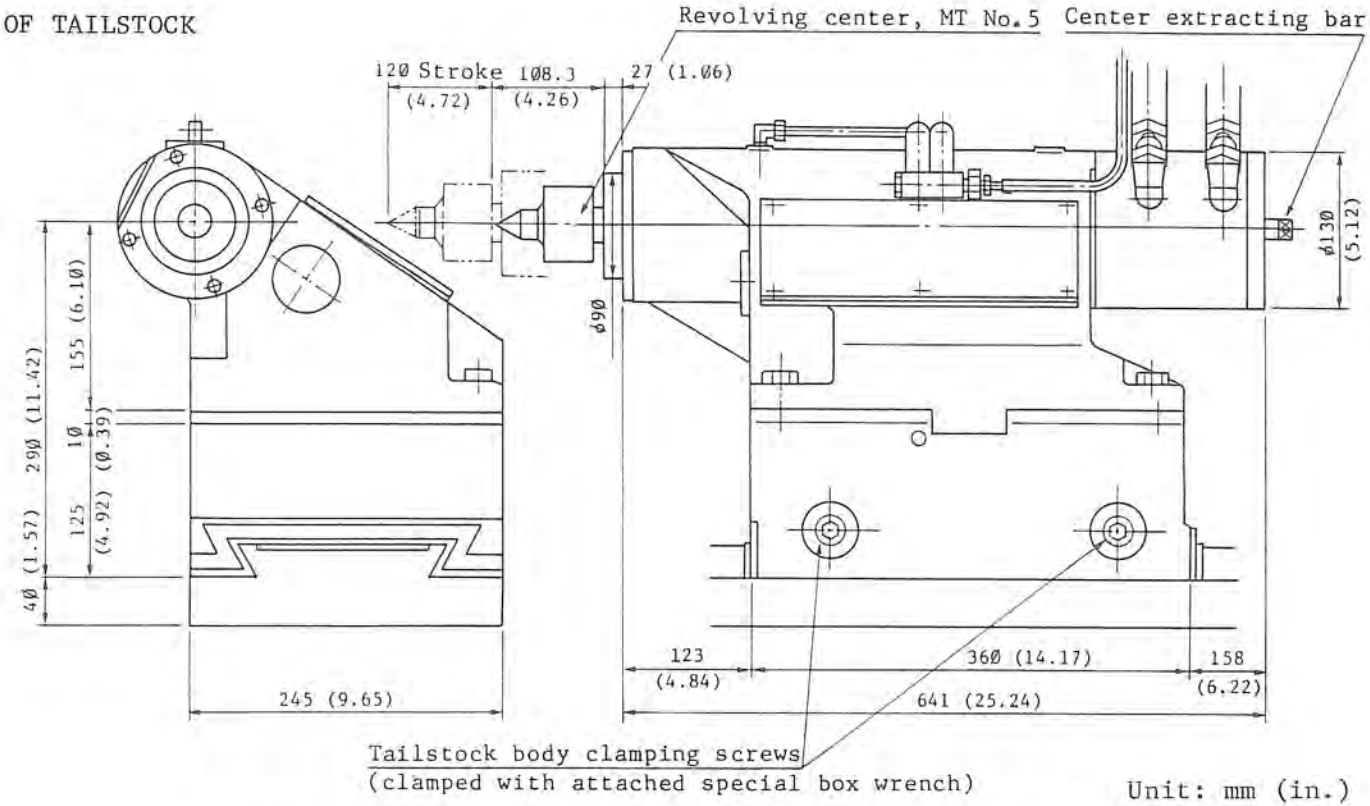

Unit: mm (in.)

Item	Specification	
Revolving Center	MT No.5	
Hydraulic Stroke	120 mm (4.72 in.)	
Sleeve Dia.	ø90 mm (ø3.54 in.)	
Max. Thrust	Max. 500 kg (1,100 lbs.)	Adjust with hydraulic unit
Hydraulic Pressure	Max. 18 kg/cm^2 (256 psi)	Adjust with hydraulic unit

7-12. CHIP CONVEYOR (optional)

Unit: mm (in.)

500L-type		
ℓ	H	Motor
2420 (95.28)	560 (22.05)	0.1 kW (0.13 HP)

500H-type		
ℓ	H	Motor
2720 (107.09)	1100 (43.31)	0.1 kW (0.13 HP)

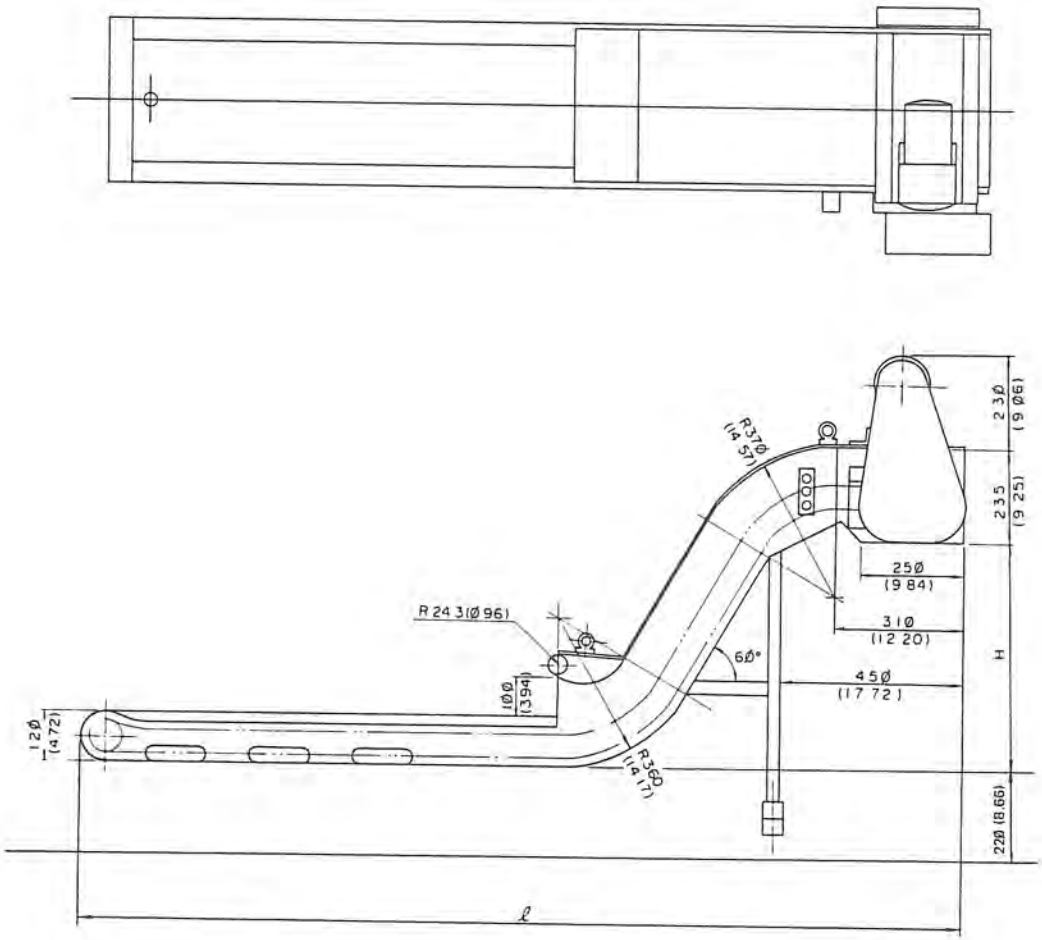

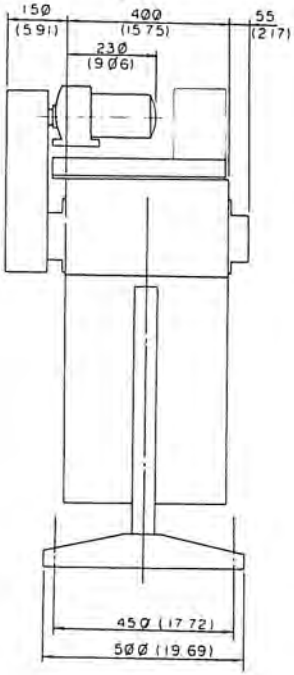

Maximum capacity : 250 liters (66.1 gal.)
Allowable chip weight: 350 kg (770 lbs.)

Unit: mm (in.)

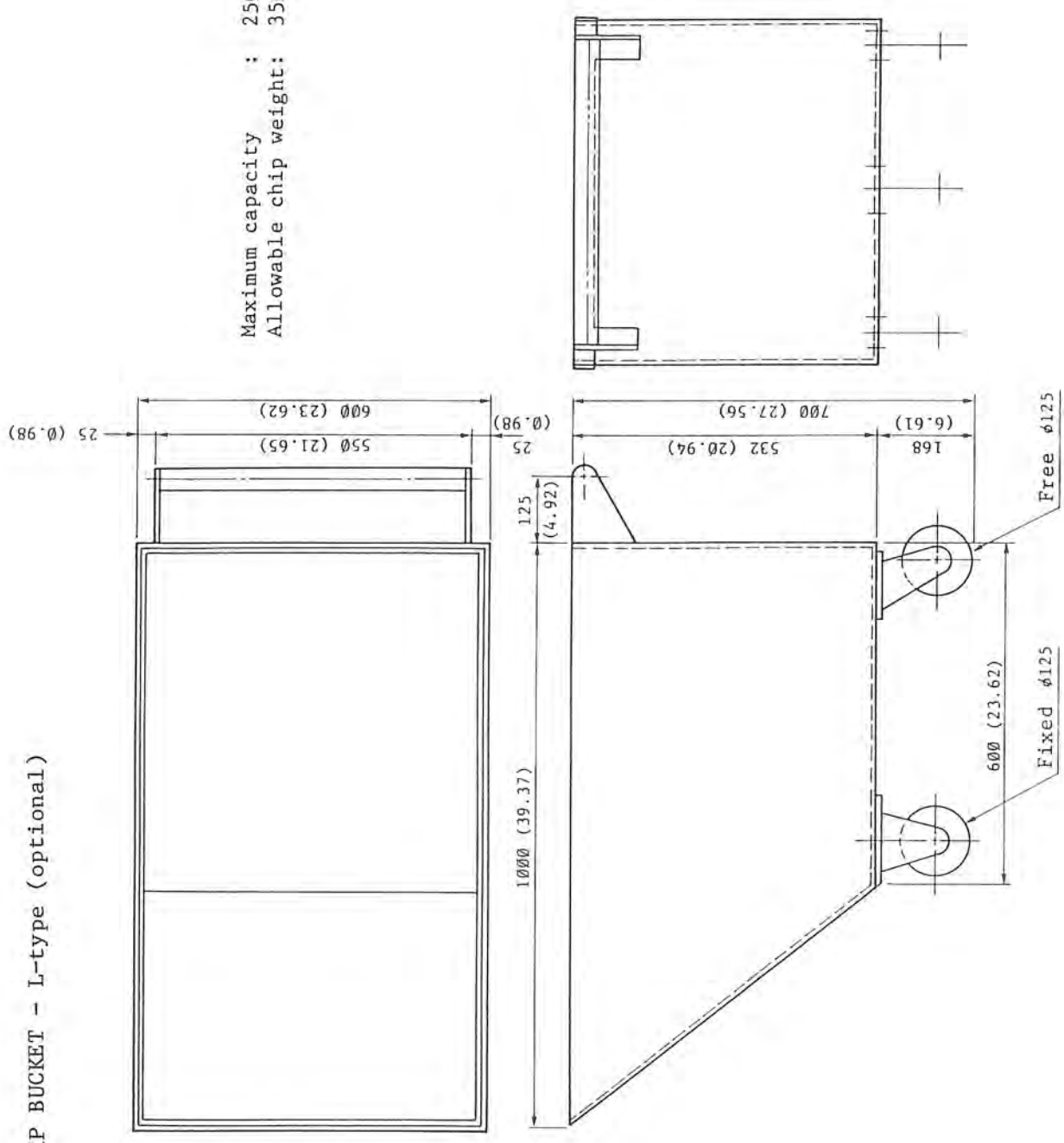

7-13. CHIP BUCKET - L-type (optional)