# Controls on the TNC 407, TNC 415B and TNC 425

### Controls on the visual display unit

Toggle display between machining and programming modes

GRAPHICS TEXT SPLIT SCREEN — Switch-over key for displaying graphics only, program blocks only, or both program blocks and graphics

Soft keys for selecting function in screen

Shift keys for soft keys

Brightness, Contrast

### Typewriter keyboard for entering letters and symbols

Q W E R T Y — File names/ comments

G F S T M — ISO programs

### Machine operating modes

MANUAL OPERATION

EL. HANDWHEEL

POSITIONING WITH MDI

PROGRAM RUN/SINGLE BLOCK

PROGRAM RUN/FULL SEQUENCE

### Programming modes

PROGRAMMING AND EDITING

TEST RUN

### Program/file management

PGM NAME — Select programs and files

CL PGM — Delete programs and files

PGM CALL — Enter program call in a program

EXT — Activate external data transfer

MOD — Select miscellaneous functions

### Moving the cursor and for going directly to blocks, cycles and parameter functions

Move cursor (highlight)

GOTO □ — Go directly to blocks, cycles and parameter functions

### Override control knobs

Feed rate: 100, 50, 150, F %, 0

Spindle speed: 100, 50, 150, S %, 0

### Programming path movements

APPR DEP — Approach/depart contour

L — Straight line

CC — Circle center/pole for polar coordinates

C — Circle with center point

CR — Circle with radius

CT — Tangential circle

CHF — Chamfer

RND — Corner rounding

### Tool functions

TOOL DEF / TOOL CALL — Enter or call tool length and radius

R+ / R- — Activate tool radius compensation

### Cycles, subprograms and program section repeats

CYCL DEF / CYCL CALL — Define and call cycles

LBL SET / LBL CALL — Enter and call labels for subprogramming and program section repeats

STOP — Enter program stop in a program

TOUCH PROBE — Enter touch probe functions in a program

### Coordinate axes and numbers, editing

X ... V — Select coordinate axes or enter them into program

0 ... 9 — Numbers

. — Decimal point

-/+ — Arithmetic sign

P — Polar coordinates

I — Incremental dimensions

Q — Q parameters for part families or in mathematical functions

Capture actual position

NO ENT — Skip dialog questions, delete words

ENT — Confirm entry and resume dialog

END □ — End block

CE — Clear numerical entry or TNC message

DEL □ — Abort dialog; delete program sections

Downloaded from www.Manualslib.com manuals search engine

# TNC Guideline:
From workpiece drawing to program-controlled machining

| Step | Task | TNC operating mode | Section in manual |
|---|---|---|---|
| | **Preparation** | | |
| 1 | Select tools | —— | —— |
| 2 | Set workpiece datum for coordinate system | —— | —— |
| 3 | Determine spindle speeds and feed rates | —— | 12.4 |
| 4 | Switch on machine | —— | 1.3 |
| 5 | Cross over reference marks | or | 1.3, 2.1 |
| 6 | Clamp workpiece | —— | —— |
| 7 | Set datum / Reset position display... | | |
| 7a | ... **with** 3D Touch Probe | or | 9.2 |
| 7b | ... **without** 3D Touch Probe | or | 2.3 |
| | **Entering and testing part programs** | | |
| 8 | Enter part program or download over external data interface | or | 5 to 8 or 10 |
| 9 | Test part program for errors | | 3.1 |
| 10 | Test run: Run program block by block without tool | | 3.2 |
| 11 | If necessary: Optimize part program | | 5 to 8 |
| | **Machining the workpiece** | | |
| 12 | Insert tool and run part program | | 3.2 |

Downloaded from www.Manualslib.com manuals search engine

## 1.1 The TNC 425, TNC 415 B and TNC 407

The TNCs are shop-floor programmable contouring controls for boring machines, milling machines and machining centers with up to 5 axes. It also features oriented spindle stop.

In the TNC, one operating mode for machine movement (machining modes) and one for programming or program testing (programming modes) are always simultaneously active.

**The TNC 425**

This control features digital control of machine axis speed. The TNC 425 provides high geometrical accuracy, even with complex workpiece surfaces and at high speeds.

**The TNC 415 B**

The TNC 415 B uses an analog method of speed control in the drive amplifier. All the programming and machining functions of the TNC 425 are also available on the TNC 415 B.

**The TNC 407**

The TNC 407 uses an analog method of speed control in the drive amplifier. Most programming and machining functions of the TNC 425 are also available on the TNC 407, with the following exceptions:

- Graphics during program run
- Tilting the machining plane
- Three-dimensional radius compensation
- Linear movement in more than three axes

**Technical differences between TNCs**

| | TNC 425 | TNC 415 B | TNC 407 |
|---|---|---|---|
| Speed control | Digital | Analog | Analog |
| Block processing time | 4 ms | 4 ms | 24 ms |
| Control loop cycle time: Position controller | 3 ms | 2 ms | 6 ms |
| Control loop cycle time: Speed controller | 0,6 ms | 0.6 ms | — |
| Program memory | 256 K byte | 256 K byte | 128 K byte |
| Input resolution | 0.1 µm | 0.1 µm | 1 µm |



Downloaded from www.Manualslib.com manuals search engine

### Visual display unit and keyboard

The 14-inch color screen displays all the information necessary for effective use of the TNCs' capabilities. Immediately below the screen are soft keys (keys whose functions are identified on screen) to simplify and improve flexibility of programming.

The keys are arranged on the keyboard in groups according to function: This makes it easier to create programs and to use the TNC's functions.

### Programming

The TNCs are programmed right at the machine with interactive, conversational guidance. If a production drawing is not specially dimensioned for NC, the HEIDENHAIN FK free contour programming makes the necessary calculations automatically. The TNCs can also be programmed in ISO format or in DNC mode.

The TNC function for sectioning programs provides a clearer view of long programs. You can use this function to subdivide a specific program into structural points. The individual structural points are then displayed in the right window of the screen and enable you to recognize the structure of the program at a glance.

### Graphics

Interactive graphics show you the contour that you are programming. Workpiece machining can be graphically simulated both during (only TNC 415 B and TNC 425) or before actual machining. Various display modes are available.

### Compatibility

The TNCs can execute all part programs that were written on HEIDENHAIN controls TNC 150 B and later.



Downloaded from www.Manualslib.com manuals search engine

## Keyboard

The keys on the TNC keyboard are marked with symbols and abbreviations that make them easy to remember. They are grouped according to the following functions:

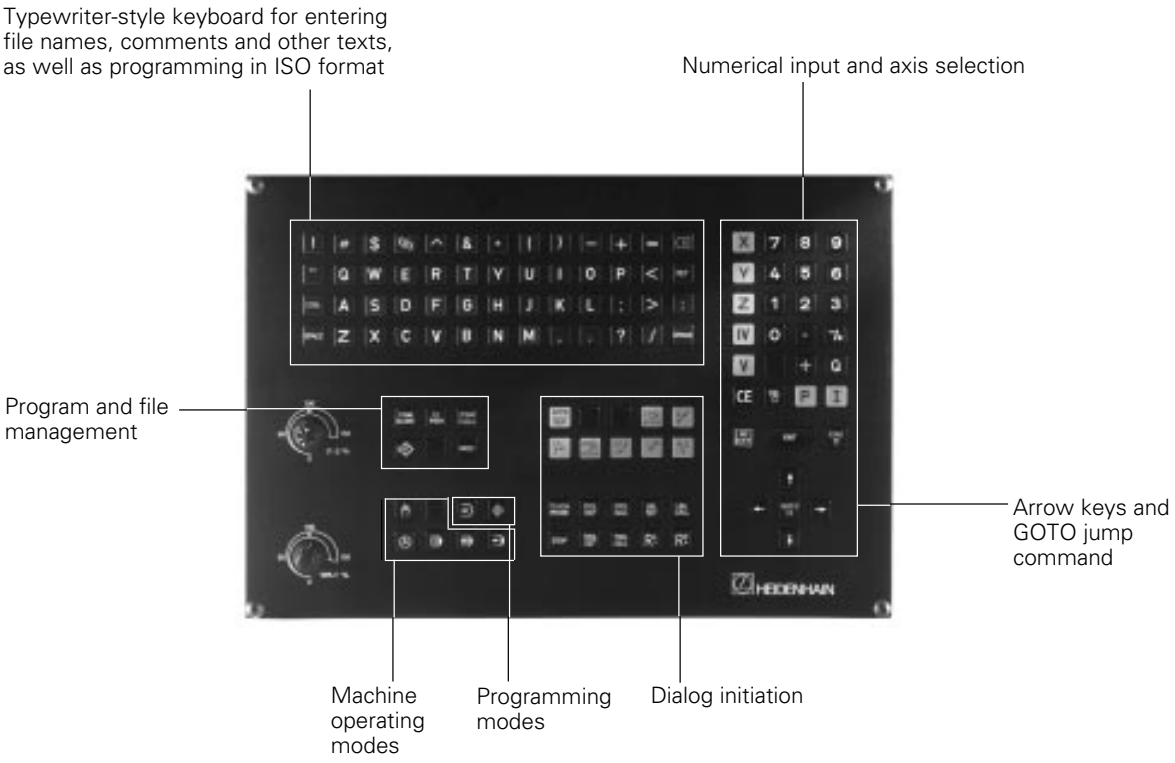


The functions of the individual keys are described in the fold-out of the front cover.

Machine panel buttons, e.g. I (NC start), are describe in the manual for your machine tool. In this manual they are shown in gray.



Downloaded from www.Manualslib.com manuals search engine

## Visual display unit

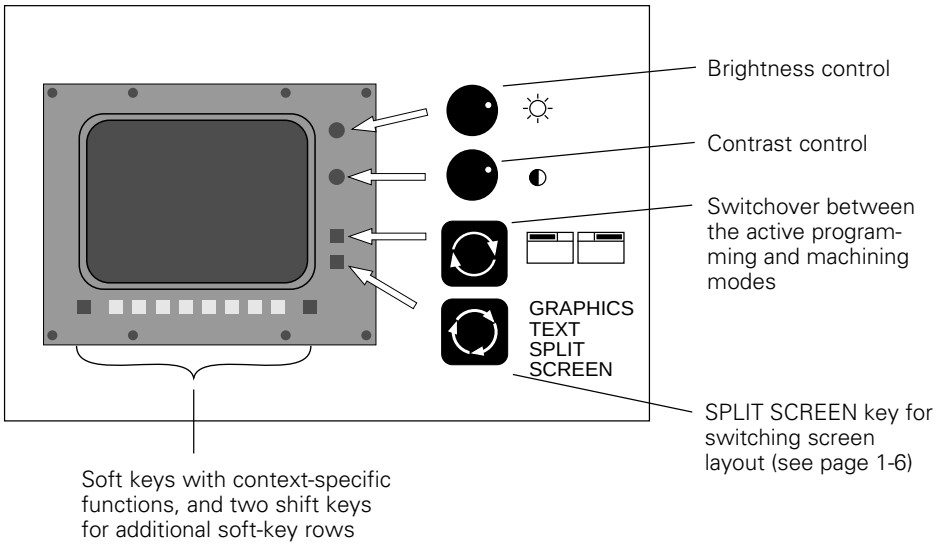


### Headline

The two selected TNC modes are written in the screen headline: the machining mode to the left and the programming mode to the right. The currently active mode is displayed in the larger box, where the dialog prompts and TNC messages also appear.

### Soft keys

The soft keys select functions which are described in the fields immediately above them. The shift keys to the right and left call additional soft-key functions. Colored lines above the soft-key row indicate the number of available rows. The line representing the active row is highlighted.



Downloaded from www.Manualslib.com manuals search engine

### Screen layout

You can select the type of display on the TNC screen by pressing the SPLIT SCREEN key and one of the soft keys listed below. Depending on the active mode of operation, you can select:

| Mode of operation | Screen layout | Soft key |
|---|---|---|
| MANUAL<br>ELECTRONIC HANDWHEEL | Display positions only | POSITION |
| | Display positions in the left and STATUS in the right screen window | POSITION + STATUS |
| POSITIONING WITH MANUAL DATA INPUT | Display program blocks only | PGM |
| | Display program blocks in the left and STATUS in the right screens window | PGM + STATUS |
| PROGRAM RUN / FULL SEQUENCE,<br>PROGRAM RUN / SINGLE BLOCK,<br>TEST RUN | Display program blocks only | PGM |
| | Display program blocks in the left and program structure in the right screen window | PGM + SECTION |
| | Display program blocks in the left and STATUS in the right screen window | PGM + STATUS |
| | Display program blocks in the left and graphics in the right screen window | PGM + GRAPHICS |
| | Display graphics only | GRAPHICS |
| PROGRAMMING AND EDITING | Display program blocks only | PGM |
| | Display program blocks in the left and program structure in the right screen window | PGM + SECTION |
| | Display program blocks in the left and programming graphics in the right screen window | PGM + GRAPHICS |



Downloaded from www.Manualslib.com manuals search engine

**Screen layout of modes**

PROGRAMMING AND EDITING

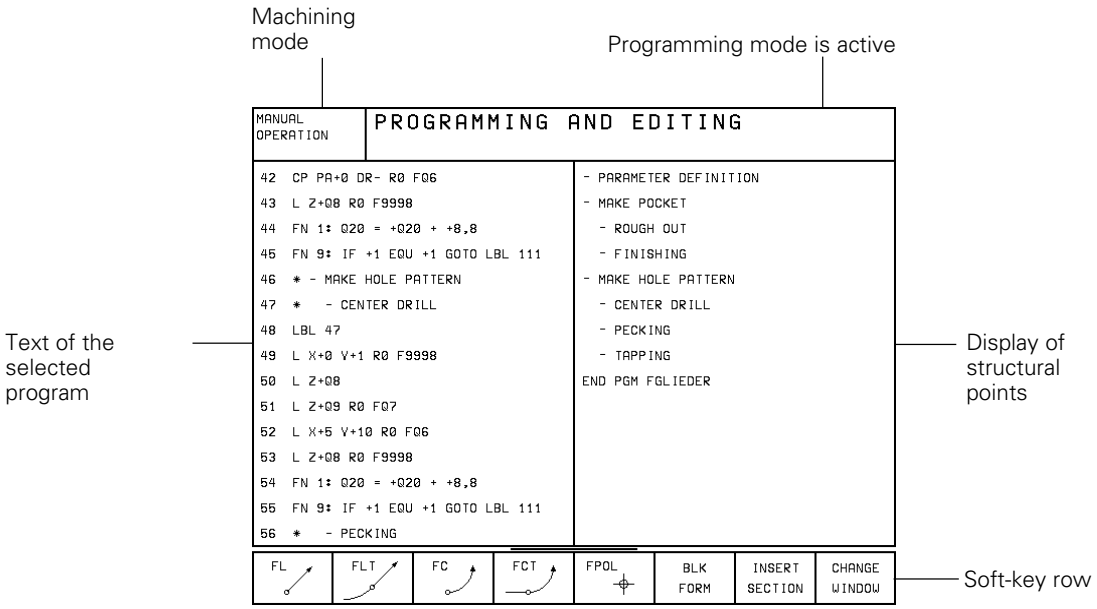


TEST RUN:

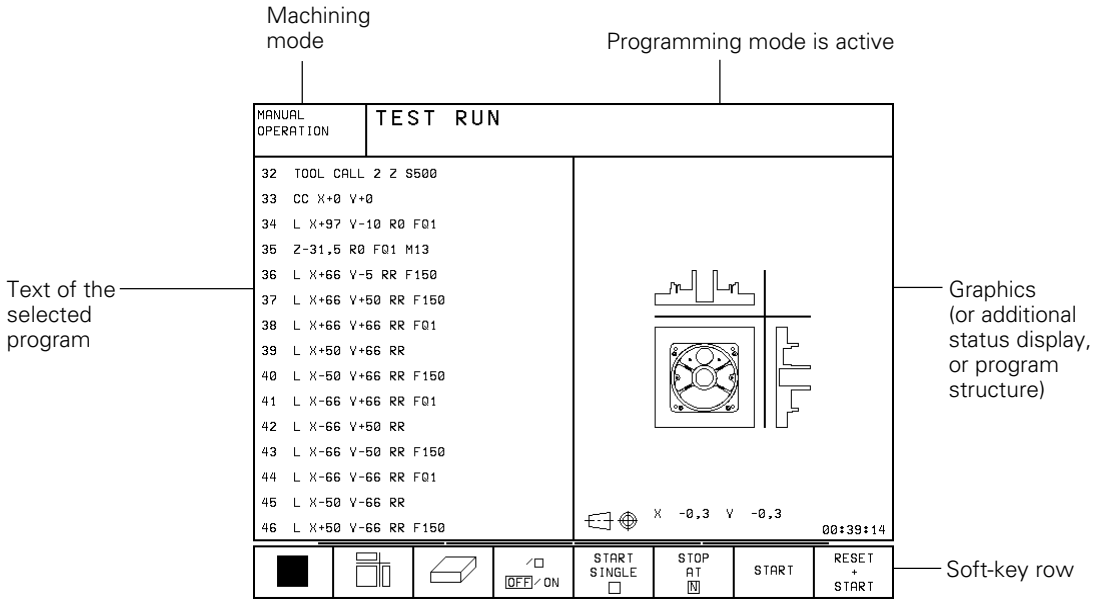




Downloaded from www.Manualslib.com manuals search engine

MANUAL OPERATION and ELECTRONIC HANDWHEEL modes:

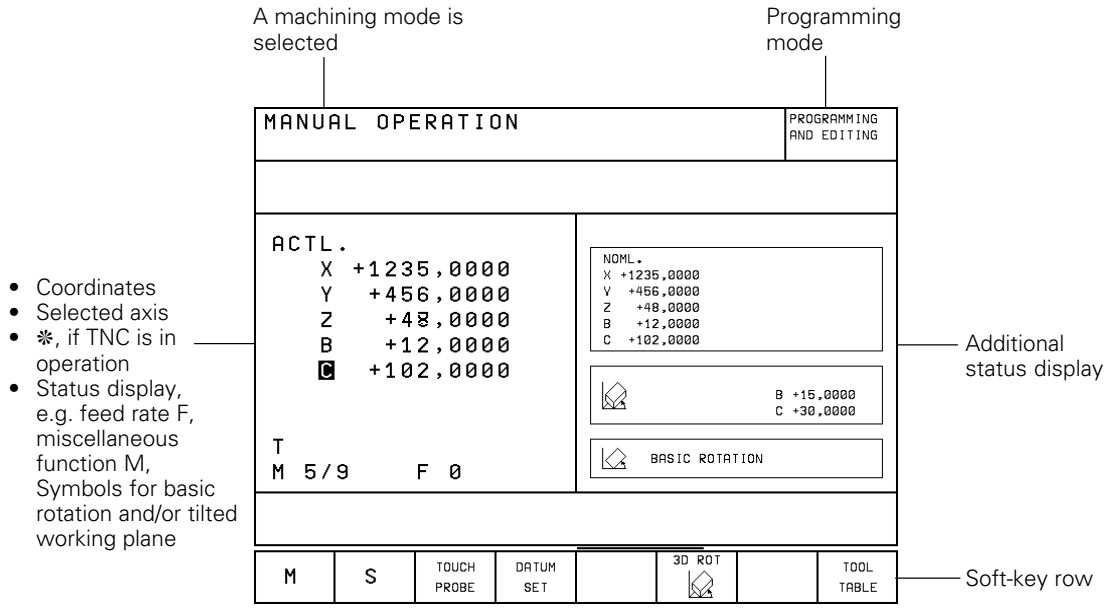


PROGRAM RUN / FULL SEQUENCE, PROGRAM RUN / SINGLE BLOCK

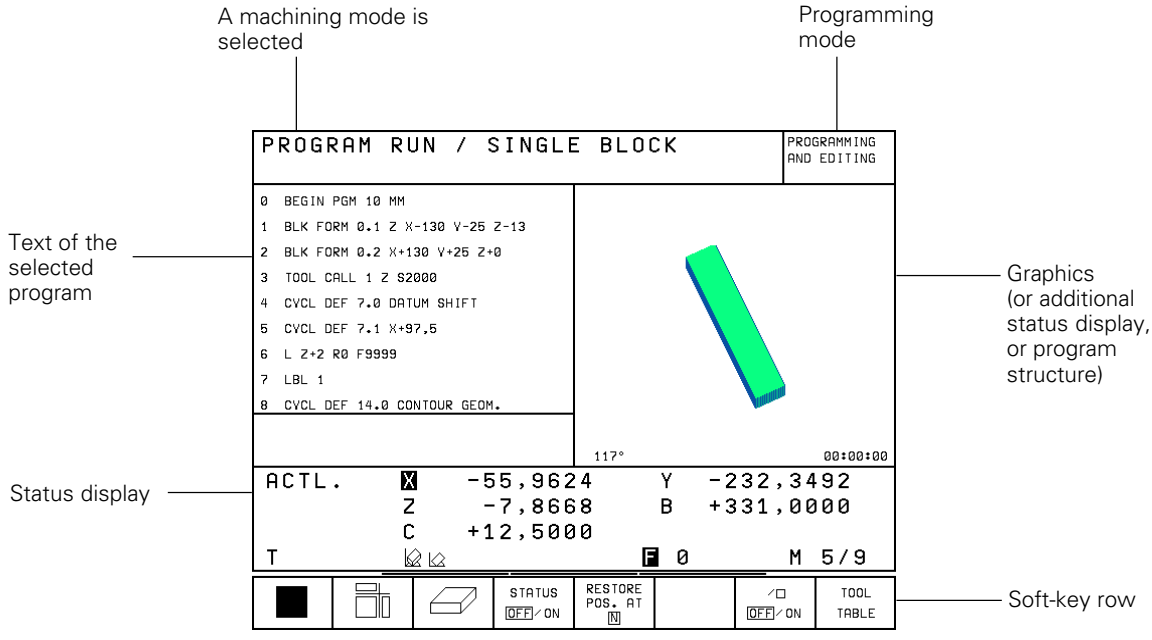




Downloaded from www.Manualslib.com manuals search engine

## TNC Accessories

### 3D touch probes

The TNC provides the following features when used in conjunction with a 3D touch probe (see Chapter 9):

- Electronic workpiece locating (compensation of workpiece misalignment)
- Datum setting
- Workpiece measurement during program run
- Digitizing 3D surfaces (option)
- Tool measurement with the TT 110 touch probe

Fig. 1.6: HEIDENHAIN 3D touch probes TS 511 and TS 120

### Floppy disk unit

With the HEIDENHAIN FE 401 floppy disk unit you can store programs and tables on diskette.
It is also a means of transferring programs which were created on a personal computer.

With the FE 401 you can transfer programs that were written on a PC to the TNC. Very large programs that exceed the storage capacity of the TNC can be "drip fed" block-by-block: The machine executes the transferred blocks and erases them immediately, freeing memory for more blocks from the FE.

Fig. 1.7: HEIDENHAIN FE 401 floppy disk unit

### Electronic handwheel

Electronic handwheels give you manual control of the axis slides. Similar to a conventional machine tool, the machine slide moves in direct relation to the rotation of the handwheel. A wide range of traverses per handwheel revolution is available.

Portable handwheels such as the HR 330 are connected via cable to the TNC. Integral handwheels such as the HR 130 are built into the machine control panel. An adapter permits connection of up to three handwheels.

Your machine manufacturer can tell you more about the handwheel configuration of your machine.

Fig. 1.8: The HR 330 electronic handwheel



Downloaded from www.Manualslib.com manuals search engine

## 1.2 Fundamentals of Numerical Control (NC)

### Introduction

This chapter covers the following points:

- What is NC?
- The part program
- Conversational programming
- Reference system
- Cartesian coordinate system
- Additional axes
- Polar coordinates
- Setting a pole at a circle center (CC)
- Datum setting
- Absolute workpiece positions
- Incremental workpiece positions
- Programming tool movements
- Position encoders
- Reference marks

### What is NC?

NC stands for "**N**umerical **C**ontrol," that is, control of a machine tool by means of numbers. Modern controls such as the TNC have a built-in computer for this purpose and are therefore called CNC (Computerized Numerical Control).

### The part program

The part program is a complete list of instructions for machining a part. It contains, for example, the target position of a tool movement, the path function—how the tool should move toward the target position— and the feed rate. Information on the radius and length of the tool, spindle speed and tool axis must also be given in the program.

### Conversational programming

Conversational programming is an especially easy method of writing and editing part programs. From the very beginning, the TNCs from HEIDENHAIN were developed specifically for shop-floor programming by the machinist. This is why they are called TNC, or "**T**ouch **N**umerical **C**ontrols."

You begin programming each machining step by simply pressing a key. The control then asks for all the information that it needs to execute the step. It points out programming errors that it recognizes.

In addition to conversational programming, you can also program the TNC in ISO format or transfer programs from a central host computer for DNC operation.



Downloaded from www.Manualslib.com manuals search engine

## Reference system

In order to define positions one needs a reference system. For example, positions on the earth's surface can be defined absolutely by their geographic coordinates of longitude and latitude. The word *coordinate* comes from the Latin word for "that which is arranged." The network of longitude and latitude lines around the globe constitutes an absolute reference system—in contrast to the relative definition of a position that is referenced to a known location.

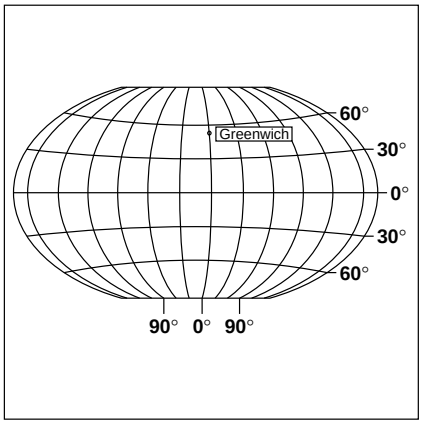


Fig. 1.9: The geographic coordinate system is an absolute reference system

## Cartesian coordinate system

On a TNC-controlled milling machine, workpieces are normally machined according to a workpiece-based Cartesian coordinate system (a rectangular coordinate system named after the French mathematician and philosopher Renatus Cartesius, who lived from 1596 to 1650). The Cartesian coordinate system is based on three coordinate axes X, Y and Z which are parallel to the machine guideways.

The figure to the right illustrates the "right-hand rule" for remembering the three axis directions: the middle finger is pointing in the positive direction of the tool axis from the workpiece toward the tool (the Z axis), the thumb is pointing in the positive X direction, and the index finger in the positive Y direction.

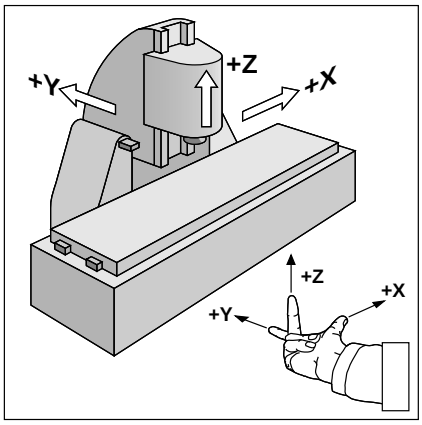


Fig. 1.10: Designations and directions of the axes on a milling machine



Downloaded from www.Manualslib.com manuals search engine

## Additional axes

The TNCs (except TNC 407) can control the machine in more than three axis. The axes **U**, **V** and **W** are secondary linear axes parallel to the main axes X, Y and Z, respectively (see illustration). **Rotary axes** are also possible. They are designated as **A**, **B** and **C**.

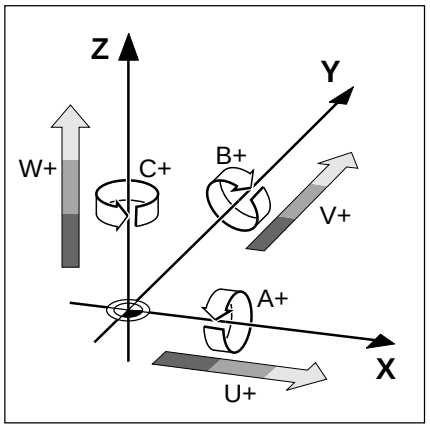


Fig. 1.11: Direction and designation of additional axes

## Polar coordinates

The Cartesian coordinate system is especially useful for parts whose dimensions are mutually perpendicular. For parts containing circular arcs or angles it is often simpler to give the dimensions in polar coordinates. While Cartesian coordinates are three-dimensional and can describe points in space, polar coordinates are two dimensional and describe points in a plane. Polar coordinates have their datum at a **circle center (CC)**, or pole, from which a position is measured in terms of its distance from that pole and the angle of its position in relation to the pole.

You could think of polar coordinates as the result of a measurement using a scale whose zero point is fixed at the datum and which you can rotate to different angles in the plane around the pole.

The positions in this plane are defined by

- **the Polar Radius (PR)** which is the distance from the circle center CC to the position, and the
- **Polar Angle (PA)** which is the size of the angle between the reference axis and the scale.

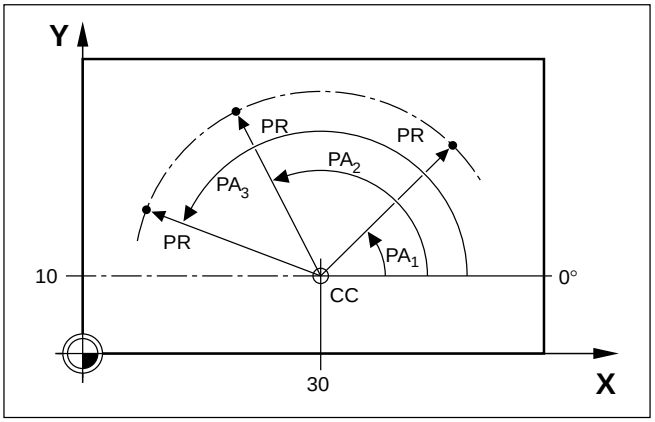


Fig. 1.12: Identifying positions on a circular arc with polar coordinates



Downloaded from www.Manualslib.com manuals search engine

## Setting a pole at a circle center (CC)

The pole is set by entering two Cartesian coordinates. These coordinates also set the reference axis for the polar angle (PA).

| Coordinates of the pole | Reference axis of the angle |
|---|---|
| X Y | +X |
| Y Z | +Y |
| Z X | +Z |

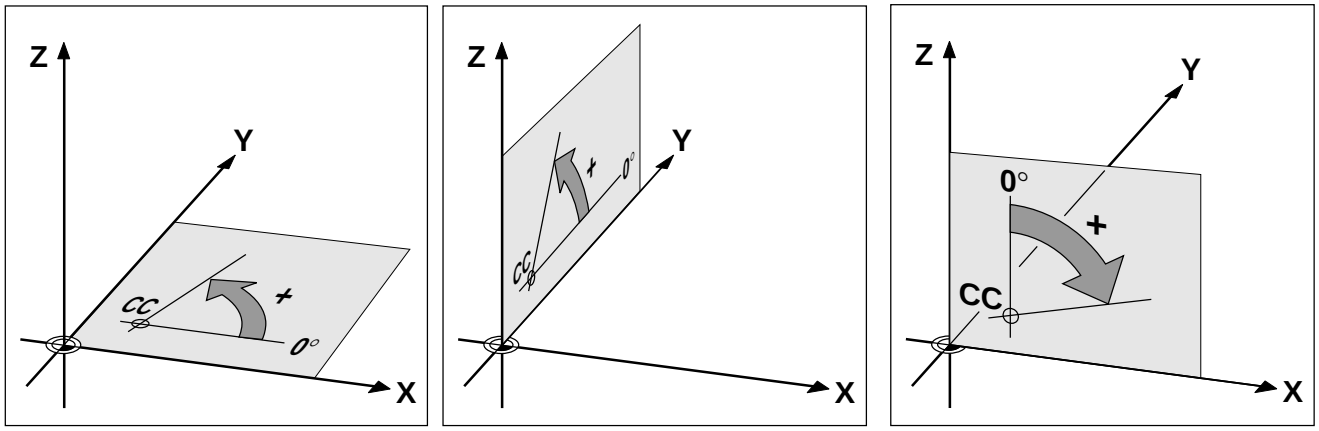


Fig. 1.13: Polar coordinates and their associated reference axes

## Setting the datum

The workpiece drawing identifies a certain prominent point on the workpiece (usually a corner) as the absolute datum and perhaps one or more other points as relative datums. The process of datum setting establishes these points as the origin of the absolute or relative coordinate systems: The workpiece, which is aligned with the machine axes, is moved to a certain position relative to the tool and the display is set either to zero or to another appropriate position value (e.g. to compensate the tool radius).

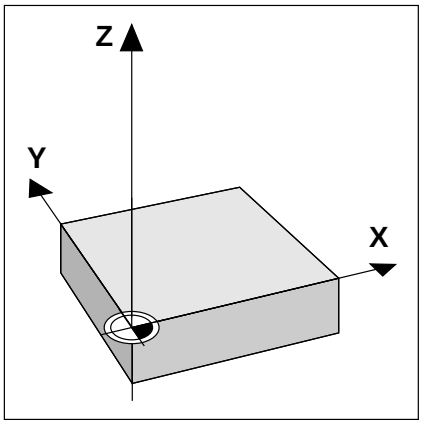


Fig. 1.14: The workpiece datum serves as the origin of the Cartesian coordinate system



Downloaded from www.Manualslib.com manuals search engine

**Example:**

**Drawings with several relative datums**
**(according to ISO 129 or DIN 406, Part 11; Figure 171)**

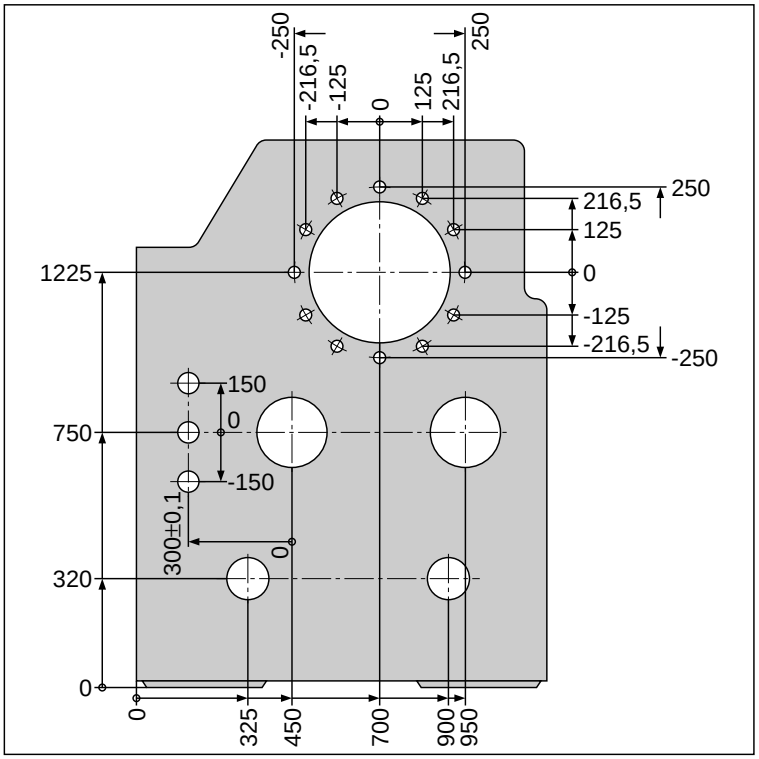


**Example:**

Coordinates of the point ① :

X = 10 mm
Y = 5 mm
Z = 0 mm

The datum of the Cartesian coordinate system is located 10 mm away from point ① on the X axis and 5 mm on the Y axis.

The 3D Touch Probe System from HEIDENHAIN is an especially convenient and efficient way to find and set datums.

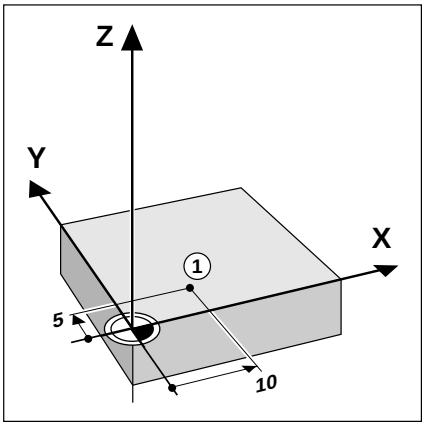


Fig. 1.16: Point ① defines the coordinate system.



Downloaded from www.Manualslib.com manuals search engine

## Absolute workpiece positions

Each position on the workpiece is clearly defined by its absolute coordinates.

**Example:** Absolute coordinates of the position ①:
X = 20 mm
Y = 10 mm
Z = 15 mm

If you are drilling or milling a workpiece according to a workpiece drawing with absolute coordinates, you are moving the tool **to** the coordinates.

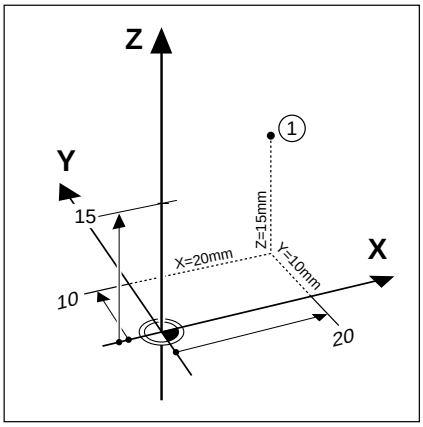


Fig. 1.17: Definition of position ① through absolute coordinates

## Incremental workpiece positions

A position can be referenced to the previous nominal position: i.e. the relative datum is always the last programmed position. Such coordinates are referred to as **incremental coordinates** (increment = "growth"), or also incremental or chain dimensions (since the positions are defined as a chain of dimensions). Incremental coordinates are designated with the prefix I.

**Example:** Incremental coordinates of the position ③ referenced to position ②

Absolute coordinates of the position ②:
X = 10 mm
Y = 5 mm
Z = 20 mm

Incremental coordinates of the position ③:
IX = 10 mm
IY = 10 mm
IZ = –15 mm

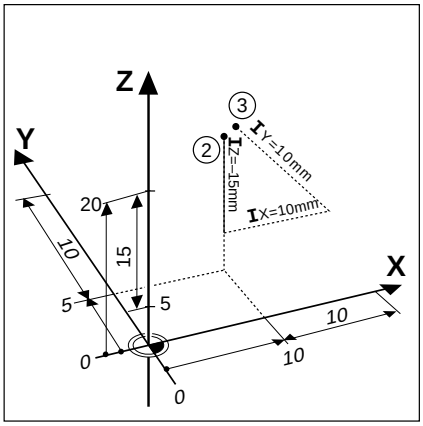


Fig. 1.18: Definition of positions ② and ③ through incremental coordinates

If you are drilling or milling a workpiece according to a workpiece drawing with incremental coordinates, you are moving the tool **by** the coordinates.

An incremental position definition is therefore a specifically relative definition. This is also the case when a position is defined by the **distance-to-go** to the target position (here the relative datum is located at the target position). The distance-to-go has a negative sign if the target position lies in the negative axis direction from the actual position.

The polar coordinate system can also express both types of dimensions:

- **Absolute polar coordinates** always refer to the pole (CC) and the reference axis.
- **Incremental polar coordinates** always refer to the last programmed nominal position of the tool.

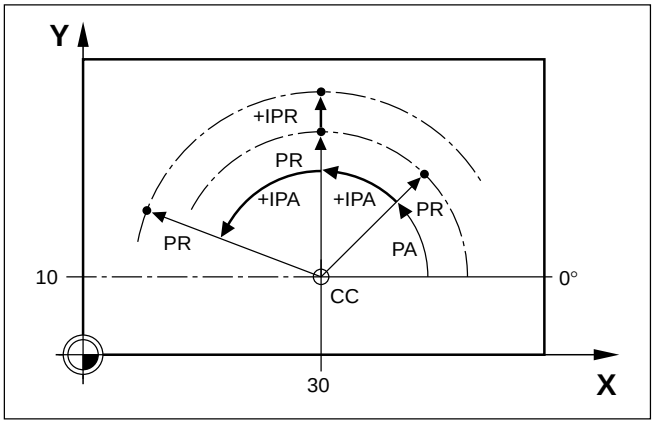


Fig. 1.19: Incremental dimensions in polar coordinates (designated with an "I")



Downloaded from www.Manualslib.com manuals search engine

**Example:**

**Workpiece drawing with coordinate dimensioning (according to ISO 129 or DIN 406, Part 11; Figure 179)**

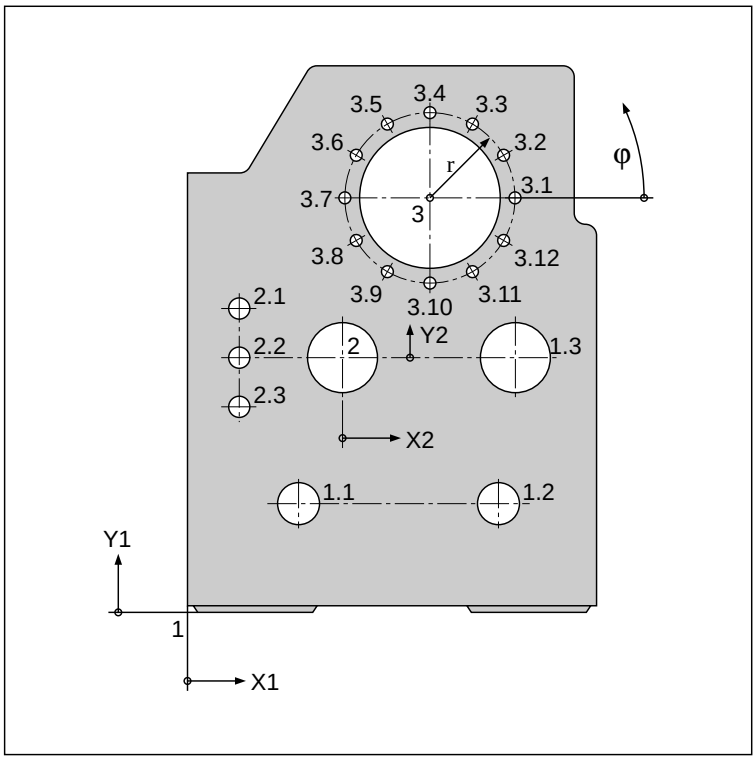


| Coordinate Origin | Pos. | Dimensions in mm | | | | |
|---|---|---|---|---|---|---|
| | | Coordinates | | | | |
| | | X1 X2 | Y1 Y2 | r | φ | d |
| 1 | 1 | 0 | 0 | | | – |
| 1 | 1,1 | 325 | 320 | | | Ø 120 H7 |
| 1 | 1,2 | 900 | 320 | | | Ø 120 H7 |
| 1 | 1,3 | 950 | 750 | | | Ø 200 H7 |
| 1 | 2 | 450 | 750 | | | Ø 200 H7 |
| 1 | 3 | 700 | 1225 | | | Ø 400 H8 |
| 2 | 2,1 | –300 | 150 | | | Ø 50 H11 |
| 2 | 2,2 | –300 | 0 | | | Ø 50 H11 |
| 2 | 2,3 | –300 | –150 | | | Ø 50 H11 |
| 3 | 3,1 | | | 250 | 0° | Ø 26 |
| 3 | 3,2 | | | 250 | 30° | Ø 26 |
| 3 | 3,3 | | | 250 | 60° | Ø 26 |
| 3 | 3,4 | | | 250 | 90° | Ø 26 |
| 3 | 3,5 | | | 250 | 120° | Ø 26 |
| 3 | 3,6 | | | 250 | 150° | Ø 26 |
| 3 | 3,7 | | | 250 | 180° | Ø 26 |
| 3 | 3,8 | | | 250 | 210° | Ø 26 |
| 3 | 3,9 | | | 250 | 240° | Ø 26 |
| 3 | 3,10 | | | 250 | 270° | Ø 26 |
| 3 | 3,11 | | | 250 | 300° | Ø 26 |
| 3 | 3,12 | | | 250 | 330° | Ø 26 |



Downloaded from www.Manualslib.com manuals search engine

## Programming tool movements

During workpiece machining, an axis position is changed either by moving the tool or by moving the machine table on which the workpiece is fixed.

You always program as if the tool is moving and the workpiece is stationary.

If the machine table moves, the axis is designated on the machine operating panel with a prime mark (e.g. X', Y'). Whether an axis designation has a prime mark or not, the programmed direction of axis movement is always the direction of tool movement relative to the workpiece.

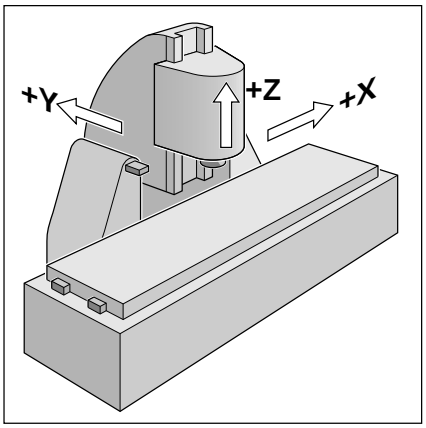


Fig. 1.21: On this machine the tool moves in the Y and Z axes; the workpiece moves in the positive X' axis.

## Position encoders

The position encoders – linear encoders for linear axes, angle encoders for rotary axes – convert the movement of the machine axes into electrical signals. The control evaluates these signals and constantly calculates the actual position of the machine axes.

If there is an interruption in power, the calculated position will no longer correspond to the actual position. When power is returned, the TNC can re-establish this relationship.

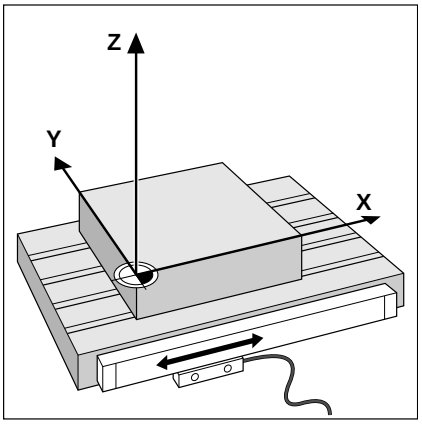


Fig. 1.22: Linear position encoder, here for the X axis

## Reference marks

The scales of the position encoders contain one or more reference marks. When a reference mark is passed over, it generates a signal which identifies that position as the machine axis reference point.
With the aid of this reference mark the TNC can re-establish the assignment of displayed positions to machine axis positions.

If the position encoders feature **distance-coded** reference marks, each axis need only move a maximum of 20 mm (0.8 in.) for linear encoders, and 20° for angle encoders.

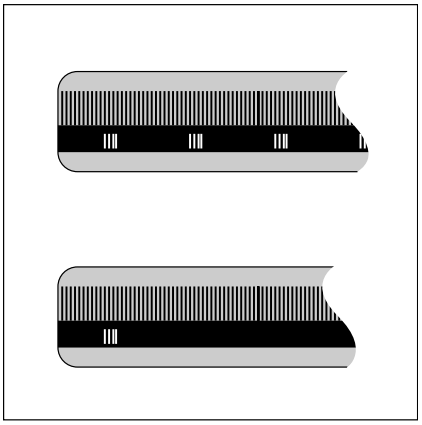

Fig. 1.23: Linear scales: above with distance-coded-reference marks, below with one reference mark



Downloaded from www.Manualslib.com manuals search engine

## 1.3 Switch-on

The switching on and traversing of reference marks are machine tool dependent functions. See your machine tool manual.

Switch on the TNC and machine tool. The TNC automatically initiates the following dialog:

**MEMORY TEST**

The TNC memory is automatically checked.

**POWER INTERRUPTED**

| | |
|---|---|
| CE | TNC message indicating that the power was interrupted.<br>Clear the message. |

**TRANSLATE PLC PROGRAM**

The PLC program of the TNC is automatically translated.

**RELAY EXT. DC VOLTAGE MISSING**

| | |
|---|---|
| I | Switch on the control voltage.<br>The TNC checks the function of the EMERGENCY OFF button. |

**MANUAL OPERATION**

**TRAVERSE REFERENCE POINTS**

| | |
|---|---|
| I | Move the axes in the displayed sequence across the reference marks:<br>For each axis press the START key. Or |
| X Y | Cross the reference points in any direction:<br>Press and hold the machine axis direction button for each axis until the reference point has been traversed. |

The TNC is now ready for operation in the MANUAL OPERATION mode.

The reference marks need only be traversed if the machine axes are to be moved. If you intend only to write, edit or test programs, you can select the PROGRAMMING AND EDITING or TEST RUN modes of operation immediately after switching on the control voltage. The reference marks can then be traversed later by pressing the PASS OVER REFERENCE soft key in the MANUAL OPERATION mode.

The reference point of a tilted coordinate system can be traversed by pressing the machine axis direction buttons. The "tilting the working plane" function (see page 2-11) must be active in the manual operating mode. The TNC then interpolates the corresponding axes. The NC START key has no function and if it is pressed the TNC will respond with an ERROR message. Make sure that the angular values entered in the menu correspond with the actual angle of the tilted axis.



Downloaded from www.Manualslib.com manuals search engine

## 1.4 Graphics and Status Displays

In the PROGRAMMING AND EDITING mode of operation the programmed macro is displayed as a two-dimensional graphic. During free contour programming (FK) the programming graphic is interactive.

In the program run (except on TNC 407) and test run operating modes, the TNC provides the following three display modes:

- Plan view
- Projection in three planes
- 3D view

The display mode is selectable via soft key.

On the TNC 415 B and TNC 425, workpiece machining can also be graphically simulated in real time.

The TNC graphic depicts the workpiece as if it is being machined by a cylindrical end mill. If tool tables are used, a spherical cutter can also be depicted (see page 4-10).

The graphics window does not show the workpiece if

- the current program has no valid blank form definition
- no program is selected

With the machine parameters MP7315 to MP7317 a graphic is generated even if no tool axis is defined or moved.

The graphics cannot show rotary axis movements (error message).

### Graphics during program run

A graphical representation of a running program is not possible if the microprocessor of the TNC is already occupied with complicated machining tasks or if large areas are being machined.

**Example:**

Stepover milling of the entire blank form with a large tool.

The TNC interrupts the graphics and displays the text "ERROR" in the graphics window. The machining process is continued, however.



Downloaded from www.Manualslib.com manuals search engine

## Plan view

The depth of the workpiece surface is displayed according to the principle “the deeper, the darker.”

Use the soft keys to select the number of depth levels that can be displayed.

- TEST RUN mode: 16 or 32 levels
- PROGRAM RUN modes: 16 or 32 levels

Plan view is the fastest of the three graphic display modes.

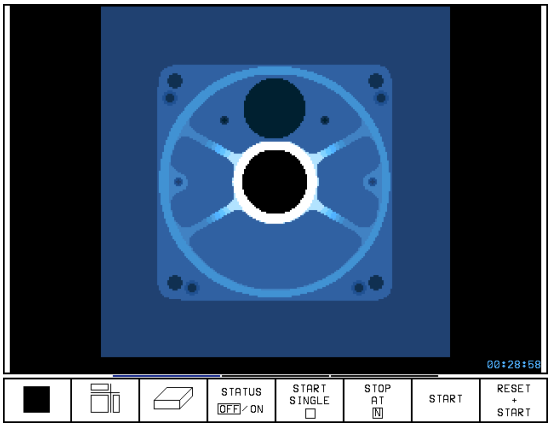


Fig. 1.24: TNC graphics, plan view

| | |
|---|---|
| ◁ or ▷ | Switch over soft keys. |

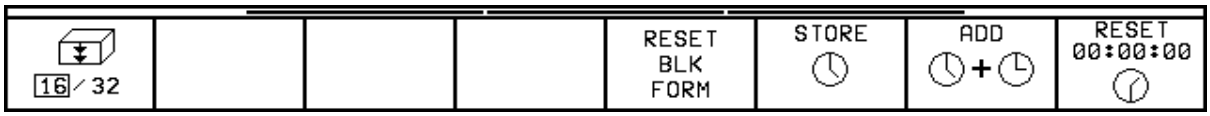


| | |
|---|---|
| 16 / 32 | Show 16 or 32 shades of depth. |



Downloaded from www.Manualslib.com manuals search engine

## Projection in 3 planes

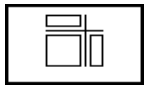

Similar to a workpiece drawing, the part is displayed with a plan view and two sectional planes. A symbol to the lower left indicates whether the display is in first angle or third angle projection according to ISO 6433 (selectable via MP 7310).

Details can be isolated in this display mode for magnification (see page 1–24).

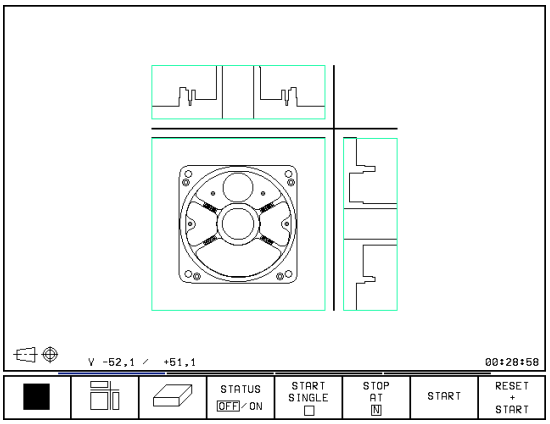


Fig. 1.25: TNC graphics, projection in three planes

### Shifting planes

The sectional planes can be shifted as desired. The positions of the sectional planes are visible during shifting.

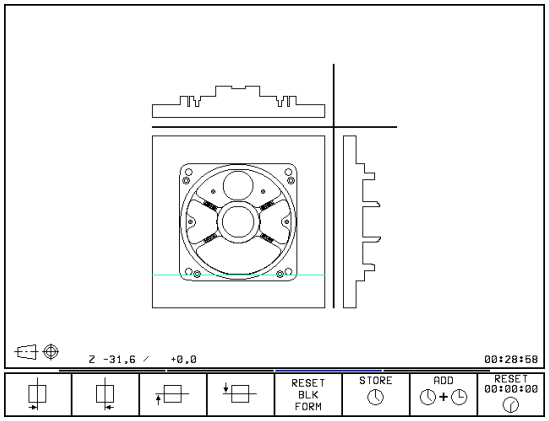


Fig. 1.26: Shifting sectional planes

| | |
|---|---|
| ◁ or ▷ | Shift the soft-key row. |

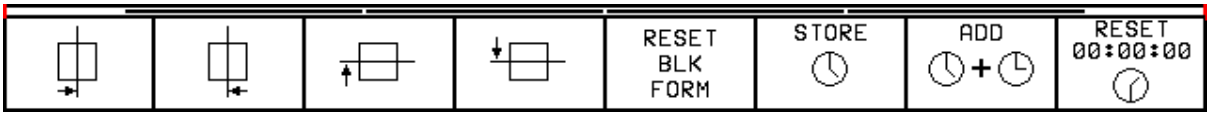


| | |
|---|---|
| or | Shift the vertical sectional plane to the right or left. |
| or | Shift the horizontal sectional plane upwards or downwards. |



Downloaded from www.Manualslib.com manuals search engine

## Cursor position during projection in 3 planes

The TNC shows the coordinates of the cursor position at the bottom of the graphics window. Only the coordinates of the working plane are shown.

This function is activated with machine parameter MP7310.

### Cursor position during detail magnification

During detail magnification, the TNC displays the coordinates of the axis that is currently being moved.

The coordinates describe the area determined for magnification. To the left of the slash is the smallest coordinate of the detail in the current axis, to the right is the largest.

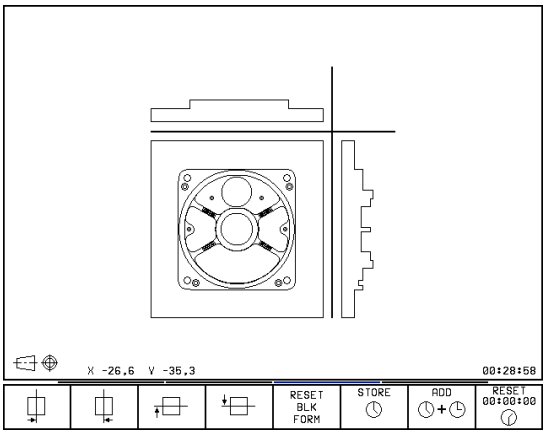


Fig. 1.27: The coordinates of the cursor position are displayed to the lower left of the graphic

## 3D view

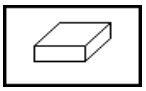

The workpiece is displayed in three dimensions, and can be rotated around the vertical axis.

The shape of the workpiece blank can be depicted by a frame overlay at the beginning of the graphic simulation.

In the TEST RUN mode of operation you can isolate details for magnification.

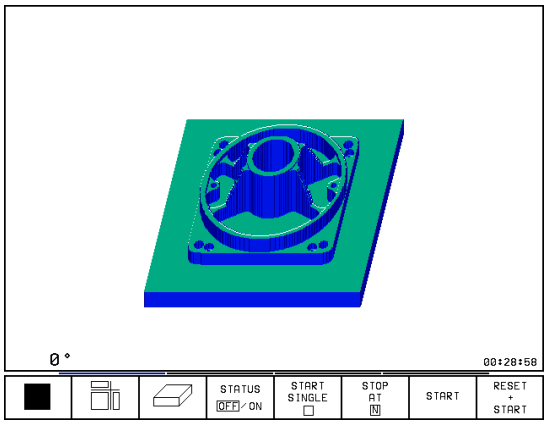


Fig. 1.28: TNC graphics, 3D view



Downloaded from www.Manualslib.com manuals search engine

**To rotate the 3D view:**

| | |
|---|---|
| ◁ or ▷ | Shift the soft-key row. |

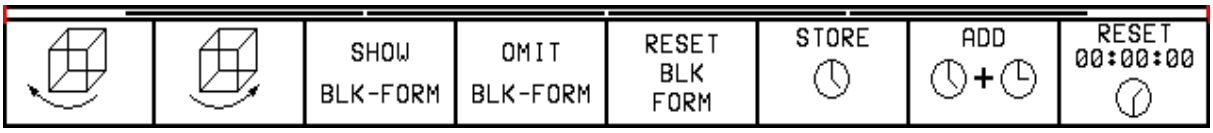


| | |
|---|---|
| or | Rotate the workpiece in 27° steps around the vertical axis. |

The current angular attitude of the display is indicated at the lower left of the graphic.

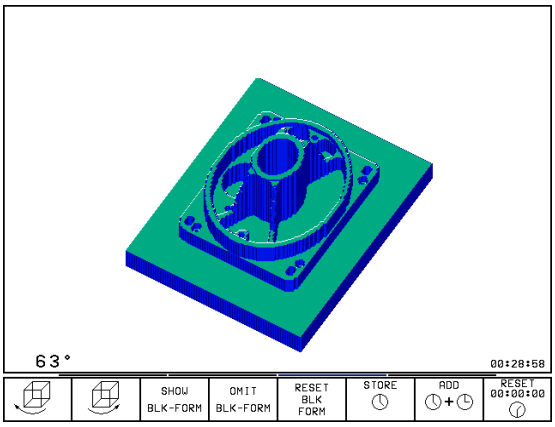


Fig. 1.29: Rotated 3D view

**To switch the frame overlay display on/off:**

| | | |
|---|---|---|
| SHOW BLK-FORM | or | OMIT BLK-FORM |

Show or omit the frame overlay of the workpiece blank form.



Downloaded from www.Manualslib.com manuals search engine

## Magnifying details

You can magnify details in the TEST RUN mode of operation in the

- projection in three planes, and
- 3D view

display modes, provided that the graphical simulation is stopped. A detail magnification is always effective in all three display modes.

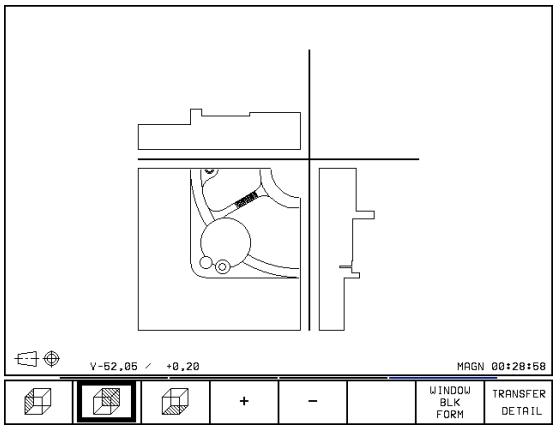


Fig. 1.30: Magnifying a detail of a projection in three planes

**To select detail magnification:**

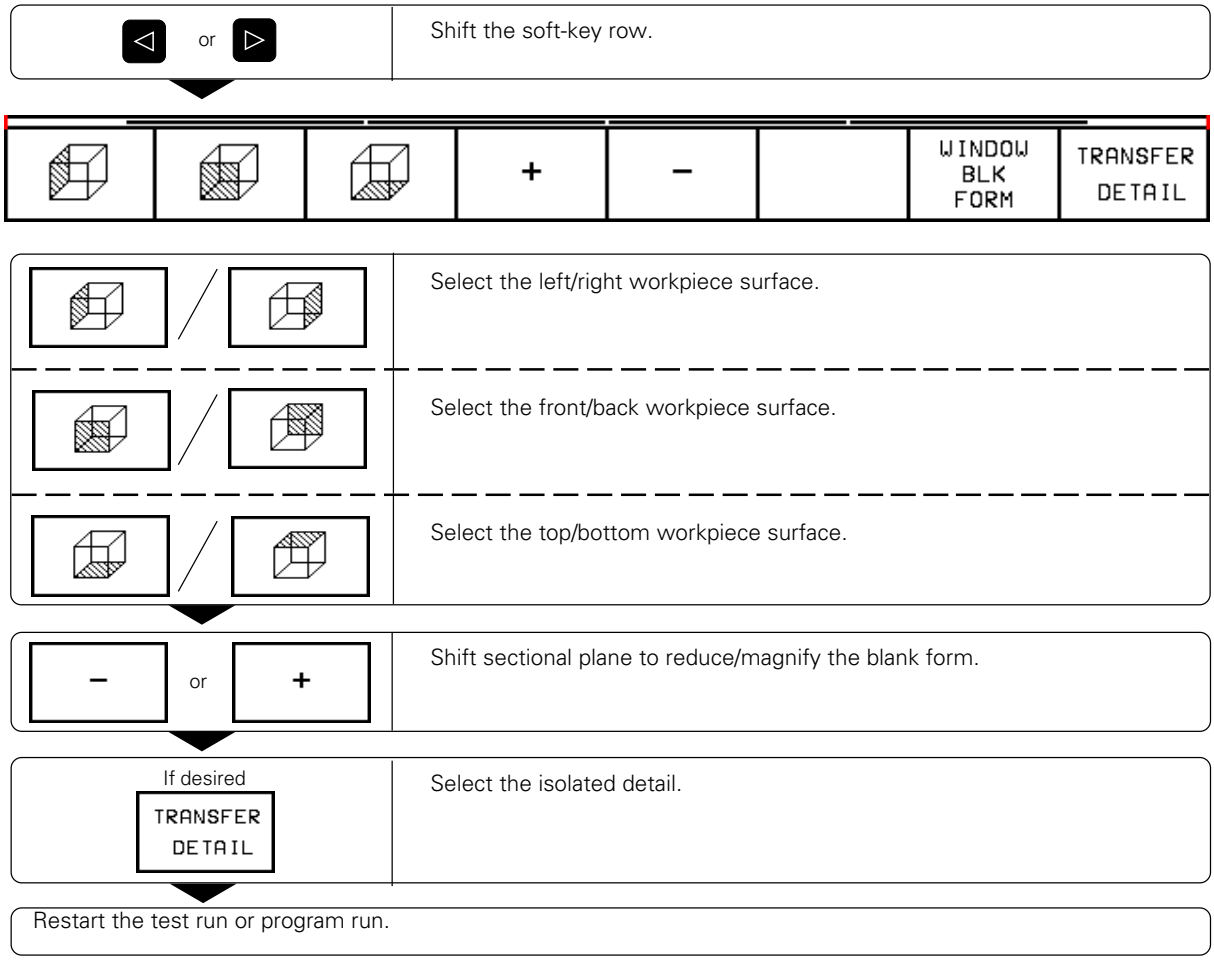


If a graphic display is magnified, this is indicated with MAGN at the lower right of the graphics window. If the detail in not magnified with TRANSFER DETAIL, you can make a test run of the shifted sectional planes.

If the workpiece blank cannot be further enlarged or reduced, the TNC displays an error message in the graphics window. The error message disappears when the workpiece blank is enlarged or reduced.



Downloaded from www.Manualslib.com manuals search engine

## Repeating graphic simulation

A part program can be graphically simulated as often as desired, either with the complete workpiece blank or with a detail of it.

| Function | Soft key |
|---|---|
| • Restore workpiece blank as it was last shown | RESET BLK FORM |
| • Show the complete BLK FORM as it appeared before a detail was magnified via TRANSFER DETAIL | WINDOW BLK FORM |

The WINDOW BLK FORM soft key will return the blank form to its original shape and size, even if a detail has been isolated and not yet magnified with TRANSFER DETAIL.

## Measuring the machining time

At the lower right of the graphics window the TNC shows the calculated machining time in

hours: minutes: seconds
(maximum 99 : 59 : 59)

- Program run:
  The clock counts and displays the time from program start to program end. The timer stops whenever machining is interrupted.
- Test run:
  The clock shows the time which the TNC calculates for the duration of tool movements.

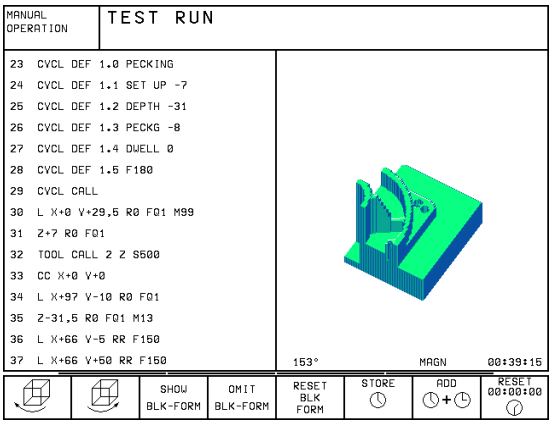


Fig. 1.31: The calculated machining time is shown at the lower right of the workpiece graphic

**To activate the stopwatch function:**

◁ or ▷ — Press the shift keys until the soft-key row with the stopwatch functions appears.

The soft keys available to the left of the stopwatch functions depend on the selected display mode.



Downloaded from www.Manualslib.com manuals search engine

| Stopwatch functions | Soft key |
|---|---|
| Store displayed time | STORE |
| Show the sum of the stored time and the displayed time | ADD |
| Clear displayed time | RESET 00:00:00 |

## Status displays

During a program run mode of operation the status display contains the current coordinates and the following information:

- Type of position display (ACTL, NOML, ...)
- Number of the current tool T
- Tool axis
- Spindle speed S
- Feed rate F
- Active M functions
- "Control in operation" symbol: ❊
- "Axis is locked" symbol:
- Axis can be moved with the handwheel:
- Axes are moving in a tilted working plane:
- Axes are moving under a basic rotation:

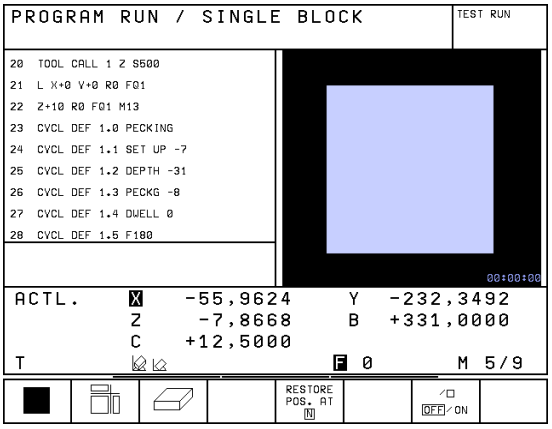


Fig. 1.32: Status display in a program run mode of operation

## Additional status displays

The additional status displays contain further information on the program run.

**To select additional status displays:**

| | |
|---|---|
| STATUS OFF/ON | Set the STATUS soft key to ON. |
| ◁ or ▷ | Shift the soft-key row. |

| | | | | | | | |
|---|---|---|---|---|---|---|---|
| STATUS PGM | STATUS POS. | STATUS TOOL | STATUS COORD. TRANSF. | | STORE | ADD | RESET 00:00:00 |



Downloaded from www.Manualslib.com manuals search engine

| Additional status display | Soft key |
|---|---|
| General program information | STATUS PGM |
| Positions and coordinates | STATUS POS. |
| Tool information | STATUS TOOL |
| Coordinate transformations | STATUS COORD. TRANSF. |
| Tool measurement | STATUS TOOL PROBE |

### General program information

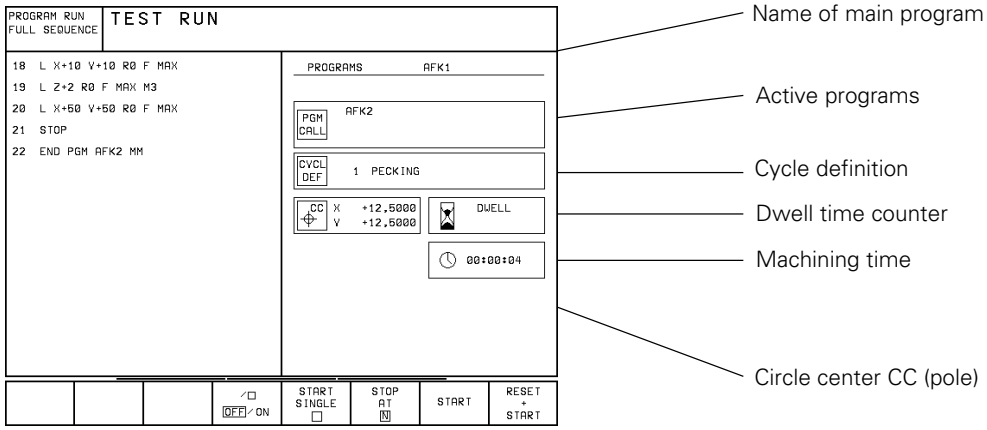


### Positions and coordinates

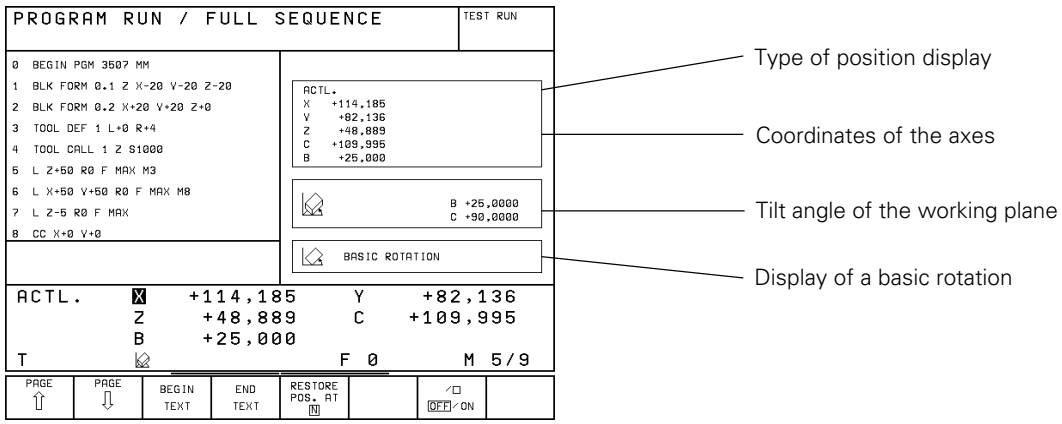




Downloaded from www.Manualslib.com manuals search engine

### Tool information

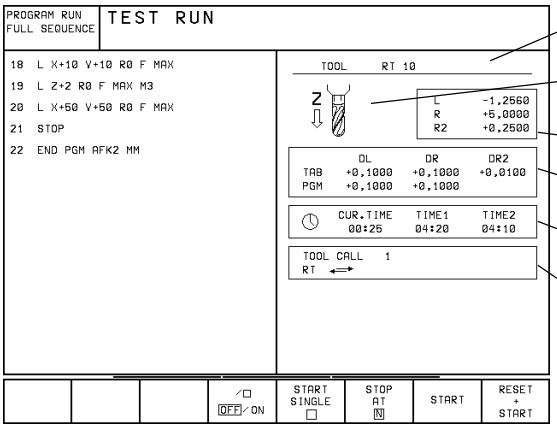


T: Tool name and number
RT: Name and number of a replacement tool

Tool axis

Tool length and radii

Oversizes (delta values)

Tool life, maximum tool life and maximum tool life for TOOL CALL

Display of the programmed tool and the (next) replacement tool

### Coordinate transformations

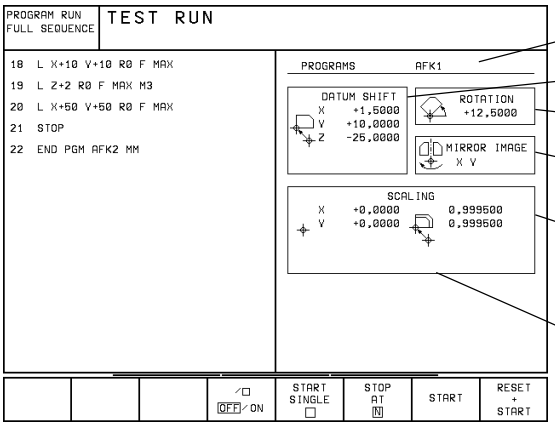


Main program name

Coordinates of the datum shift

Angle of basic rotation

Mirrored axis

Scaling factor(s)

Scaling datum

### Tool measurement

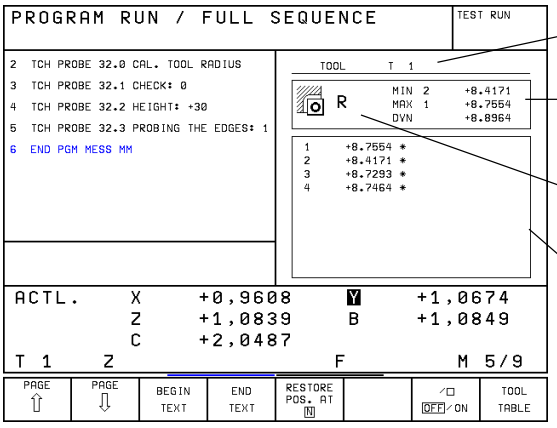


Number of the tool to be measured

Measured MIN and MAX values of the single cutting edges and the result of measuring the rotating tool

Display whether the tool radius or the tool length is being measured

When working with the TT 110: Cutting edge number with the corresponding measured value. If the measured value is followed by an asterisk, the allowable tolerance defined in the tool table was exceeded.



Downloaded from www.Manualslib.com manuals search engine

## 1.5 Interactive Programming Graphics

The TNC's two-dimensional interactive graphics generates the part contour as it is being programmed.

The TNC provides the following features with the interactive graphics for the PROGRAMMING AND EDITING operating mode:

- Detail magnification
- Detail reduction
- Block number display ON/OFF
- Restoring incomplete lines
- Clearing the graphic
- Interrupting graphics

The graphic functions are selected exclusively with soft keys.

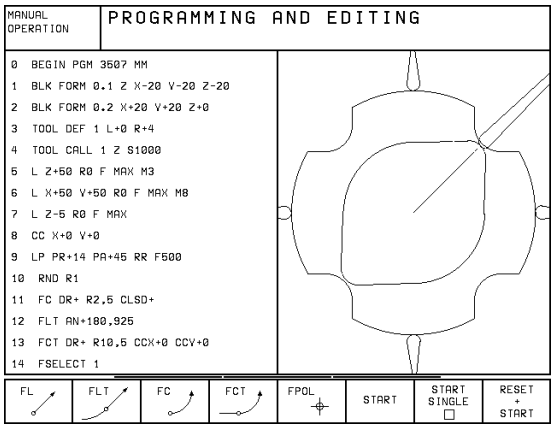

Fig. 1.37: Interactive graphics

To work with interactive graphics you must switch the screen layout to PGM + GRAPHICS (see page 1-6).

### To generate graphics during programming:

| | |
|---|---|
| ◁ or ▷ | Shift the soft-key row. |

| SHOW OMIT BLOCK NR. | REDRAW | CLEAR GRAPHIC | | | | BLK FORM | AUTO DRAW OFF/ON |
|---|---|---|---|---|---|---|---|

| | |
|---|---|
| AUTO DRAW OFF/ON / AUTO DRAW OFF/ON | Select/deselect graphic generation during programming. The default setting is OFF. |

AUTO DRAW ON does not simulate program section repeats.

### Generating a graphic for an existing program

| FL | FLT | FC | FCT | FPOL | START | START SINGLE | RESET + START |
|---|---|---|---|---|---|---|---|

**To generate a graphic up to a certain block:**

| | |
|---|---|
| ↑ or ↓ | Select the desired block with the vertical cursor keys. |
| GOTO e.g. 4 7 | Enter the desired block number, e.g. 47. |
| RESET + START | Generate a graphic from block 1 to the entered block. The AUTO DRAW soft key must be set to ON. |



Downloaded from www.Manualslib.com manuals search engine

| Function | Soft key |
|---|---|
| • Generate interactive graphic blockwise | START SINGLE |
| • Generate a complete graphic or complete it after RESET + START | START |
| • Interrupt interactive graphics | STOP |

The STOP soft key appears while the TNC generates the interactive graphic.

**To magnify/reduce a detail:**

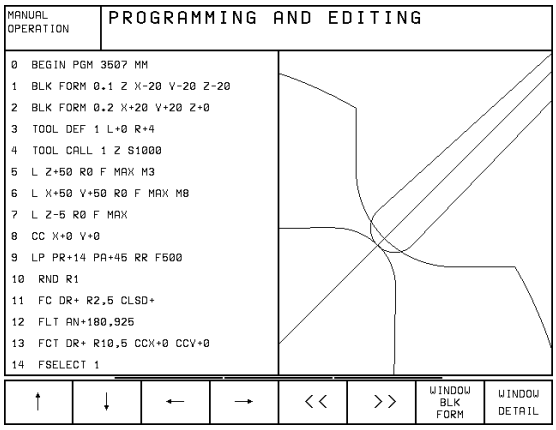


Fig. 1.38: Detail from an interactive graphic

◁ or ▷ — Shift the soft-key row.

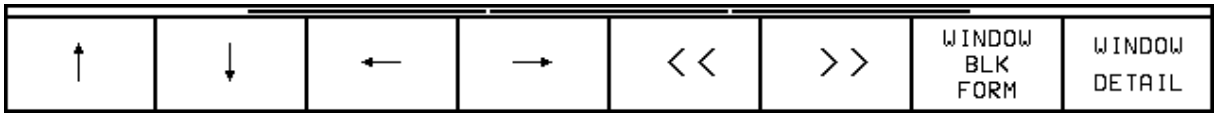


↑ or ↓ — Show the frame overlay and move vertically.

← or → — Show the frame overlay and move horizontally.

. . .



Downloaded from www.Manualslib.com manuals search engine

. . .

| | |
|---|---|
| << or >> | Reduce or enlarge the frame overlay. |
| WINDOW DETAIL | Confirm the selected section. |

**To undo a change in the section area:**

| | |
|---|---|
| WINDOW BLK FORM | Restore the original section. |

**To erase the graphic:**

| | |
|---|---|
| ◁ or ▷ | Shift the soft key row. |

| | | | | | | | |
|---|---|---|---|---|---|---|---|
| SHOW OMIT BLOCK NR. | REDRAW | CLEAR GRAPHIC | | | | BLK FORM | AUTO DRAW OFF / ON |

| | |
|---|---|
| CLEAR GRAPHIC | Erase the graphic. |

**Block number display ON/OFF**

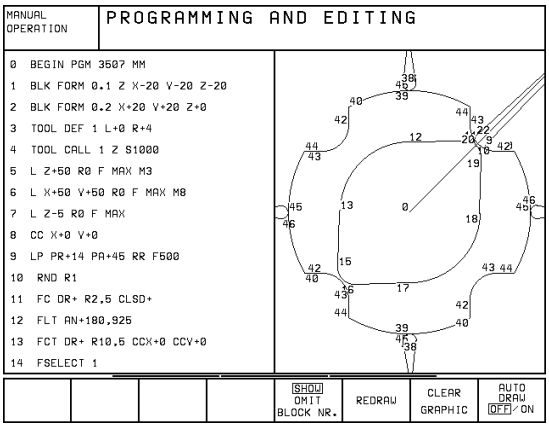

Fig. 1.39: Text with block numbers

| | |
|---|---|
| SHOW OMIT BLOCK NR. / SHOW OMIT BLOCK NR. | Show or omit block numbers in the program text display. |



Downloaded from www.Manualslib.com manuals search engine

## 1.6 Files

Programs, texts and tables are written as files and stored in the TNC.

A file is identified by

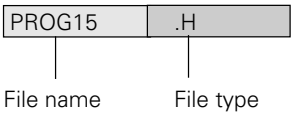


To open a new file you must enter a file name consisting of from one to 16 characters (letters and numbers), depending on MP7222.

The file types are listed in the table at right.

| Files in the TNC | Type |
|---|---|
| Programs<br>• in HEIDENHAIN plain language dialog<br>• according to ISO | <br>.H<br>.I |
| Tables for<br>• Tools<br>• Pallets<br>• Datums<br>• Contour points (TM 110 digitizing range) | <br>.T<br>.P<br>.D<br>.PNT |
| Texts as<br>• ASCII files | <br>.A |

Fig. 1.40: TNC file types

### File directory

The TNC can store up to 100 files at one time. You can call up a directory of these programs by pressing the PGM NAME key. To delete one or more programs, press the CL PGM key.

The file directory contains the following information:

- File name
- File type
- File size in bytes (=characters)
- File status

Further information is shown at the top of the screen:

- Selected file storage
  - TNC memory
  - External storage via RS-232 interface
  - External storage via RS-422
- Interface mode, e.g. FE1, EXT1 for external storage
- File type, e.g. ❊ .H is shown if only HEIDENHAIN dialog programs are shown

**Example:**

RS 422/EXT1: ❊ .T is displayed. This means that only those files are shown that have the extension .T and are located in an external storage device, (e.g. a PC), that is connected to the TNC through the RS-422 interface (see also Chapter 10).

A soft key calls the file directory of an external data storage medium. The screen is then divided into two columns.

**Select the file directory:**

| File.. | Mode of operation | Call file directory with . . . |
|---|---|---|
| ... create new file | | ... |
| ... edit | | ... |
| ... erase | | ... |
| ... test | | ... |
| ... execute | | ... |

Fig. 1.41: File management functions

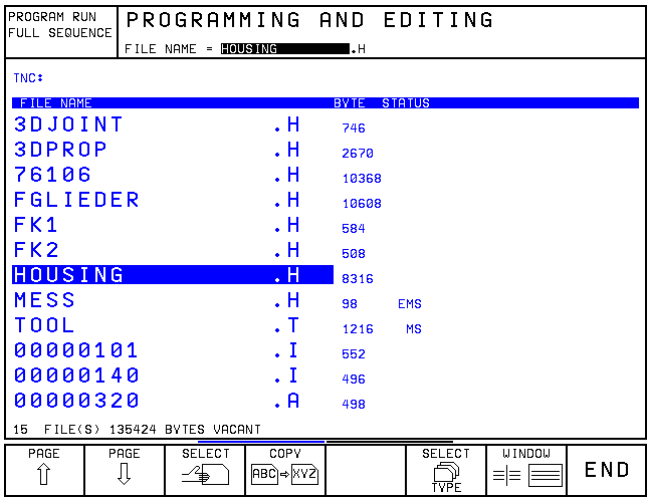


Fig. 1.42: Files are sorted alphabetically and according to type

| | |
|---|---|
| 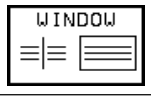 | Show the file directory in one or two columns. The selected layout is shown in the soft key. |



Downloaded from www.Manualslib.com manuals search engine

## File status

The letters in the STATUS column give the following information about the files:

E: File is selected in the PROGRAMMING AND EDITING mode of operation
S: File is selected in the TEST RUN operating mode
M: File is selected in a program run operating mode
P: File is protected against editing and erasure
IN: File contains inch dimensions
W: File has been transferred to external storage and cannot be run

## Selecting a file

| | |
|---|---|
| PGM NAME | Call the file directory. |

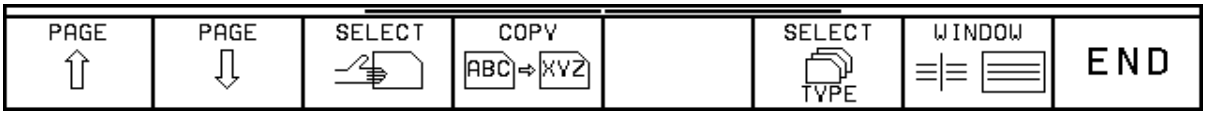


At first only HEIDENHAIN dialog (type .H) files are shown. Other files are shown via soft key:

| | |
|---|---|
| SELECT TYPE | Select the file type. |

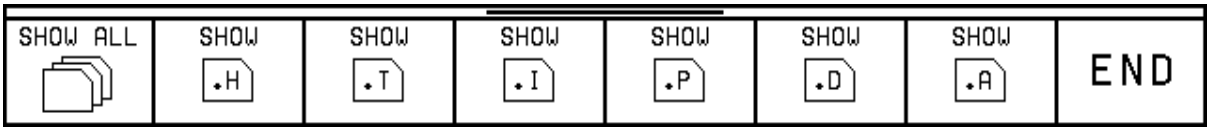


| | |
|---|---|
| SHOW ALL | Show all files. |

You select a file by moving the highlight bar:

| Function | Key / Soft key |
|---|---|
| • Move the highlight bar vertically to the desired file | ↓ / ↑ |
| • Move pagewise down/up through the file directory | PAGE ⇩ / PAGE ⇧ |
| • Select the highlighted file | SELECT |



Downloaded from www.Manualslib.com manuals search engine

## To copy a file:

Mode of operation: PROGRAMMING AND EDITING.

| | |
|---|---|
| PGM NAME | Call the file directory. |

Move the highlight bar to the file that you wish to copy, for example a type .H file.

| | |
|---|---|
| COPY ABC⇨XYZ | Select the copying function. |

**DESTINATION FILE = . H**

Type the new file name into the highlight bar in the screen headline, the file type remains unchanged.

| | |
|---|---|
| ENT | Copy the file. The original file is not deleted. |

## To erase a file:

You can erase files in the PROGRAMMING AND EDITING operating mode.

| | |
|---|---|
| CL PGM | Call the file directory. |

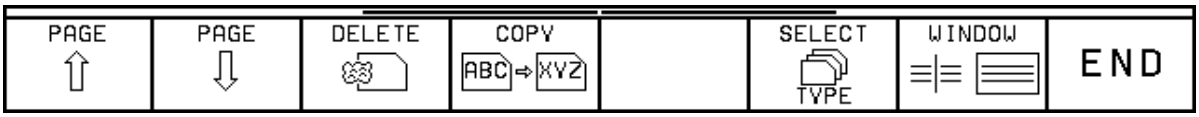


Move the highlight to the file that you wish to delete.

| | |
|---|---|
| DELETE | Erase the file. |

### To erase a protected file:

A protected file (status P) cannot be erased. If you are sure that you wish to erase it, you must first remove the protection (see p. 1-35, "To cancel file protection").



Downloaded from www.Manualslib.com manuals search engine

## Protecting, renaming, and converting files

In the PROGRAMMING AND EDITING operating mode you can:

- convert files from one type to another
- rename files
- protect files from editing and erasure

| | |
|---|---|
| PGM NAME | Call the program directory. |
| ▷ | Switch the soft-key row. |

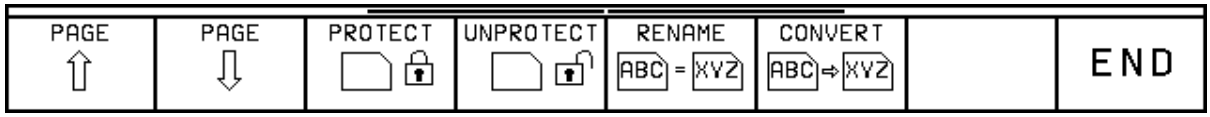


**To protect a file:**

The file receives the status P and cannot be accidentally changed or erased.

Move the highlight to the file that you wish to protect.

| | |
|---|---|
| PROTECT | Press the PROTECT soft key. The file is then protected. The protected file is displayed in bright characters. |

**To cancel file protection:**

Move the highlight to the file with status P whose protection you wish to remove.

| | |
|---|---|
| UNPROTECT | Press the UNPROTECT soft key. |

| CODE NUMBER = | |
|---|---|
| 8 6 3 5 7 | Type the code number 86357 into the highlight bar in the screen headline. |
| ENT | Cancel the file protection. The file no longer has the status P. |

You can unprotect other files by simply marking them and pressing the UNPROTECT soft key.



Downloaded from www.Manualslib.com manuals search engine

**To rename a file:**

Move the highlight to the file that you wish to rename.

| | |
|---|---|
| RENAME ABC = XYZ | Press the RENAME soft key. |

**DESTINATION FILE = . H**

Type the new file name into the highlight in the screen headline. The file type cannot be changed.

| | |
|---|---|
| ENT | Rename the file. |

**To convert a file:**

Text files (type .A) can be converted to all other types. Other types can be converted only into ASCII text files. They can then be edited with the alphanumeric keyboard.

Part programs that were created with FK free contour programming can also be converted to HEIDENHAIN dialog programs.

Move the highlight to the file that you wish to convert.

| | |
|---|---|
| CONVERT ABC ⇨ XYZ | Press the CONVERT soft key. |
| CONVERT → .A | Select the new file type, here an ASCII text file (type .A). |

**DESTINATION FILE = . A**

Type the new file name into the highlight bar in the screen headline.

| | |
|---|---|
| ENT | Convert the file. |



Downloaded from www.Manualslib.com manuals search engine

## File management for files on an external data medium

You can erase and protect files stored on the FE 401B floppy disk unit from HEIDENHAIN. You can also format a floppy disk from the TNC. To do this you must first select the PROGRAMMING END EDITING mode of operation.

| | |
|---|---|
| EXT | Call the program directory for external files. |

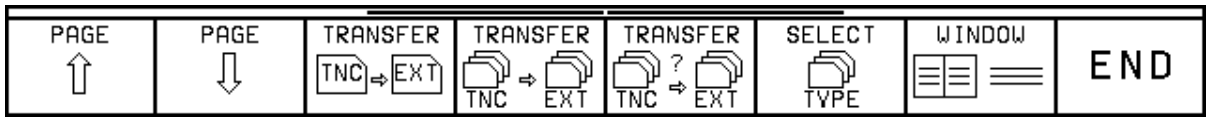


| | |
|---|---|
| → | Move the highlight to the right onto the external file. |
| WINDOW | Select one-window mode. |

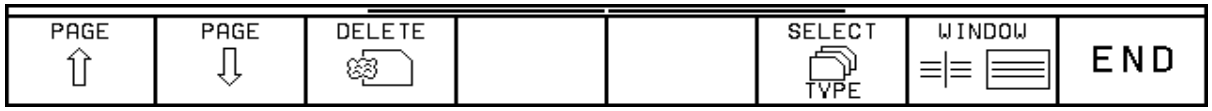


**To erase a file on the FE 401B**

| | |
|---|---|
| ↓ / ↑ | Move the highlight to the unwanted file. |
| DELETE | Erase the file in the highlight. |

**To protect or unprotect a file on FE 401B**

| | |
|---|---|
| ▷ | Switch to the next soft-key row. |

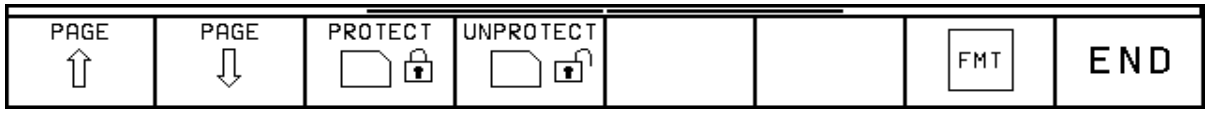


Files are protected with the PROTECT soft key; file protection is removed with the UNPROTECT soft key. The functions for setting and removing file protection are the same as for files stored in the TNC (see p. 1-35).



Downloaded from www.Manualslib.com manuals search engine

**To format a floppy disk in the FE 401 B**

| | |
|---|---|
| ▷ | Switch to the next soft-key row. |

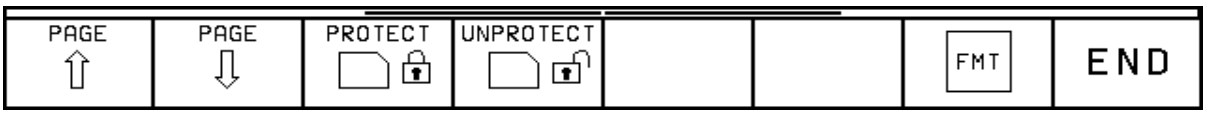


| | |
|---|---|
| FMT | Select the formatting function. |

| | |
|---|---|
| **NAME OF DISKETTE =** | |
| e.g. 1 ENT | Enter a name and start formatting with ENT. |

**To convert and transfer files**

The CONVERT soft key is only available if the selected file is in the memory of the TNC, i.e. if it is displayed on the left side of the screen.

| | |
|---|---|
| EXT | Call the program directory of the external data medium. |

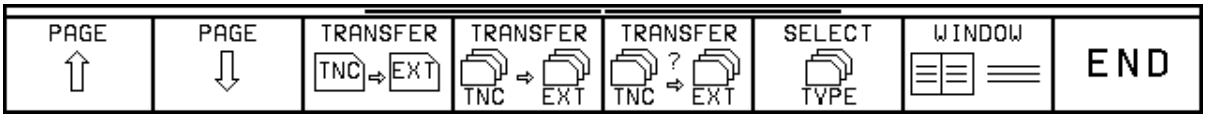


| | |
|---|---|
| ▷ | Switch the soft-key row. |

| | |
|---|---|
| CONVERT ABC ⇨ XYZ | Convert file and save it on the external data medium. |
| CONVERT → .A | Select the type of the target file, e.g. .A. |
| **DESTINATION FILE =** | |
| e.g. T B 1 ENT | Enter the new file name and start conversion with ENT. |



Downloaded from www.Manualslib.com manuals search engine

## 2.1 Moving the Machine Axes

### Traversing with the machine axis direction buttons:

Traversing with the machine axis direction buttons depends on the individual machine tool.
See your machine tool manual.

| MANUAL OPERATION | |
|---|---|
| e.g. X | Press the machine axis direction button and hold it as long as you wish the axis to move. |

You can move several axes at once in this way.

**For continuous movement:**

| MANUAL OPERATION | |
|---|---|
| e.g. Y I together | Press and hold the machine axis direction button, then press the machine start button:<br>The axis continues to move after you release the keys. |
| O | To stop the axis, press the machine STOP button. |

You can move several axes at a time in this way.



Downloaded from www.Manualslib.com manuals search engine

## Traversing with the electronic handwheel:

| ELECTRONIC HANDWHEEL | |
|---|---|
| **INTERPOLATION FACTOR:** | **X = 3** |
| e.g. 3 ENT<br>e.g. X | Enter the interpolation factor (see table).<br><br>Select the axis that you wish to move: for portable handwheels at the handwheel, for integral handwheels at the TNC keyboard. |

Now move the selected axis with the electronic handwheel. If you are using the portable handwheel, first press the enabling switch on its side.

| Interpolation factor | Traverse in mm per revolution |
|---|---|
| 0 | 20.000 |
| 1 | 10.000 |
| 2 | 5.000 |
| 3 | 2.500 |
| 4 | 1.250 |
| 5 | 0.625 |
| 6 | 0.312 |
| 7 | 0.156 |
| 8 | 0.078 |
| 9 | 0.039 |
| 10 | 0.019 |

Fig. 2.1: Interpolation factors for handwheel speed

Fig. 2.2: HR 330 electronic handwheel

The smallest programmable interpolation factor depends on the individual machine tool. See your machine tool manual.
It is also possible to move the axes with the handwheel during a program run (see page 5-70).

## Using the HR 330 electronic handwheel

The HR 330 is equipped with an enabling switch. The enabling switch is located opposite the side with the knob and the EMERGENCY STOP switch. The machine axes can only be moved when the enabling switch is depressed.

- The enabling switch is automatically depressed when the handwheel is mounted on the machine.
- Mount the handwheel on the machine on the magnetic pads such that it cannot be operated unintentionally.
- When you remove the handwheel from its position, be careful not to accidentally press the axis direction keys while the enabling switch is still depressed.



Downloaded from www.Manualslib.com manuals search engine

## Incremental jog positioning

If your machine tool has been set for incremental jog positioning, a machine axis will move by a preset increment each time you press the corresponding machine axis direction button.

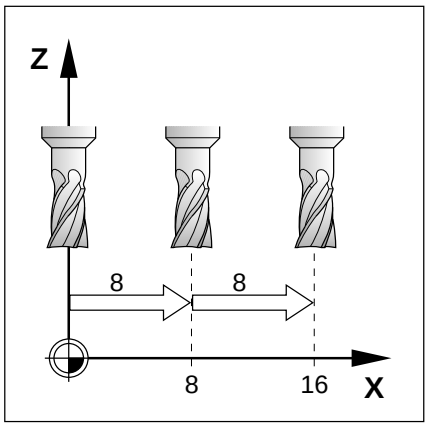


Fig. 2.3: Incremental jog positioning in the X axis

| ELECTRONIC HANDWHEEL | |
|---|---|
| **INTERPOLATION FACTOR:** | **X = 4** |
| I | Select incremental jog positioning by pressing the key as determined by the machine tool builder, e.g. I . |

| ELECTRONIC HANDWHEEL | | |
|---|---|---|
| **JOG-INCREMENT:** | **4** | **8** |
| e.g. 8 ENT<br>e.g. X | Enter the jog increment (here 8 mm).<br>Press the machine axis direction button as often as desired. | |

- Incremental jog positioning must be enabled by the machine tool manufacturer, see your machine tool manual.
- The machine manufacturer determines whether the interpolation factor for each axis is set at the keyboard or through a manual switch.

## Positioning with manual data input (MDI)

Machine axis movements can also be programmed in the $MDI file (see page 5-74).

Since the programmed movements are stored in memory, you can recall them and run them afterward as often as desired.



Downloaded from www.Manualslib.com manuals search engine

## 2.2 Spindle Speed S, Feed Rate F and Miscellaneous Functions M

These are the soft keys in the MANUAL OPERATION and ELECTRONIC HANDWHEEL modes:

| M | S | TOUCH PROBE | DATUM SET | | 3D ROT | | TOOL TABLE |
|---|---|---|---|---|---|---|---|

With these functions and with the override knobs on the TNC keyboard you can change and enter:

- the spindle speed S
- the feed rate F (can be changed but not entered)
- miscellaneous functions M

These functions are entered directly in a part program in the PROGRAMMING AND EDITING mode.

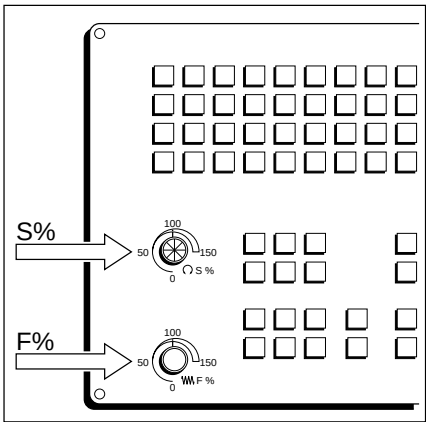


Fig. 2.4: Knobs for spindle speed and feed rate overrides

### To enter the spindle speed S:

The machine manufacturer determines what spindle speeds S are available on your TNC. See your machine tool manual.

| | |
|---|---|
| S | Select S for spindle speed. |
| **SPINDLE SPEED S =** | |
| e.g. 1 0 0 0 ENT<br>I | Enter the desired spindle speed (here 1000 rpm).<br><br>Press the machine START button to confirm the entered spindle speed. |

The spindle speed S with the entered rpm is started with an M function.

### To change the spindle speed S

| | |
|---|---|
| 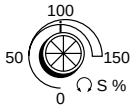 | Turn the knob for spindle speed override:<br>You can vary the speed from 0 to 150% of the last valid speed. |



The override knob for spindle speed can only vary the spindle speed on machines with a stepless spindle drive.



Downloaded from www.Manualslib.com manuals search engine

## To change the feed rate F

In the MANUAL OPERATION mode the feed rate is set by a machine parameter.

| | |
|---|---|
| 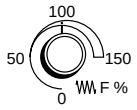 | Turn the knob for feed rate override.<br>You can vary the feed rate from 0% to 150% of the set value. |

## To enter a miscellaneous function M

The machine manufacturer determines which M functions are available on your TNC and what functions they have.

| | |
|---|---|
| M | Select M for miscellaneous function. |
| **MISCELLANEOUS FUNCTION M =** | |
| e.g. 6 ENT<br>I | Enter the miscellaneous function (here M6).<br><br>Press the machine START button to activate the miscellaneous function. |

Chapter 12 contains a list of M functions.



Downloaded from www.Manualslib.com manuals search engine

## 2.3 Setting the Datum Without a 3D Touch Probe

You fix a datum by setting the TNC position display to the coordinates of a known point on the workpiece. The fastest, easiest and most accurate way of setting the datum is by using a 3D touch probe system from HEIDENHAIN (see page 9-11).

**To prepare the TNC:**

Clamp and align the workpiece.

Insert the zero tool with known radius into the spindle.

| | |
|---|---|
| | Select the MANUAL OPERATION mode. |

Ensure that the TNC is showing the actual values (see page 11-9).

### Setting the datum in the tool axis

Fragile workpiece?
If the workpiece surface must not be scratched, you can lay a metal shim of known thickness d on it. Then enter a tool axis datum value that is larger than the desired datum by the value d.

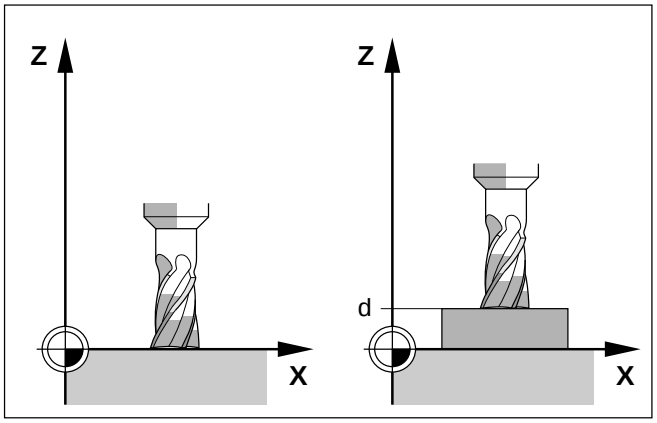


Fig. 2.5: Workpiece setting in the tool axis: right with protective shim.

Move the tool until it touches the workpiece surface.

| | |
|---|---|
| e.g. Z | Select the tool axis. |

| DATUM SET Z = | |
|---|---|
| e.g. 0 ENT | Zero tool: Set the display to Z = 0 or enter the thickness d of the shim. |
| e.g. 5 0 ENT | Preset tool: Set the display to the length L of the tool, (here Z= 50 mm) or enter the sum Z=L+d. |



Downloaded from www.Manualslib.com manuals search engine

### To set the datum in the working plane:

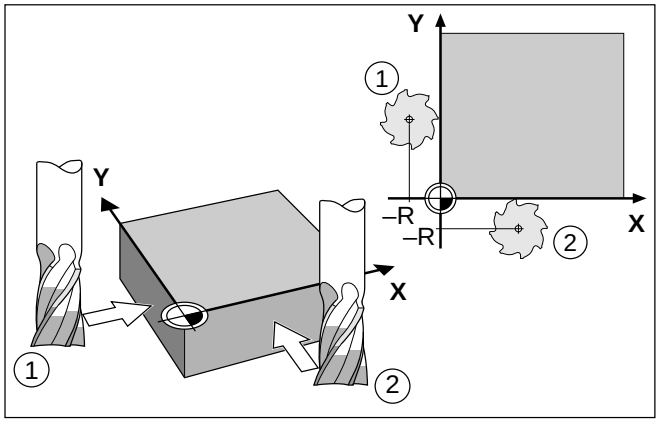


Fig. 2.6: Setting the datum in the working plane; plan view (upper right)

Move the zero tool until it touches the side of the workpiece.

| | |
|---|---|
| e.g. X | Select the axis (here X). |

**DATUM SET X =**

| | |
|---|---|
| e.g. −/+ 5 ENT | Enter the position of the tool center (here X = -5 mm) including the proper sign. |

Repeat the process for all axes in the working plane.



Downloaded from www.Manualslib.com manuals search engine

## 2.4 Tilting the Working Plane (not on TNC 407)

The functions for tilting the working plane are adapted to the TNC and the machine by the machine manufacturer.

The TNC supports machine tools with swivel heads (the tool is tilted) and/or swivel tables (the workpiece is tilted).

The program is written as usual in a main plane, such as the X/Y plane, but is executed in a plane that is tilted relative to the main plane.

Typical applications for this function:

- Oblique holes
- Contours in an oblique plane

There are two ways to tilt the working plane:

- 3D ROT soft key in the MANUAL OPERATION and ELECTRONIC HANDWHEEL operation modes
- Cycle 19 WORKING PLANE in the part program (see page 8-55)

The TNC functions for tilting the working plane are coordinate transformations. The transformed tool axis (i.e., as calculated by the TNC) always remains parallel to the actual tool axis (the axis corresponding to the positioning). The working plane is always perpendicular to the direction of the tool axis.

When tilting the working plane, the TNC differentiates between two machine types:

- Machines with swivel tables
- Machines with swivel heads

**For machines with swivel tables:**

- You must bring the **workpiece** into the desired position for machining by positioning the swivel table, for example with an L block.
- The position of the transformed tool axis does **not** change in relation to the machine-based coordinate system. Thus for example if you rotate the swivel table – and therefore the workpiece – by 90°, **the coordinate system does not rotate**. If you press the Z+ axis direction button in the MANUAL OPERATION mode, the tool moves in Z+ direction.
- In calculating the transformed coordinate system the TNC considers only the mechanically influenced offsets of the particular swivel table (the so-called "translational" components).

**For machines with swivel heads:**

- You must bring the **tool** into the desired position for machining by positioning the swivel head, for example with an L block.
- The position of the transformed tool axis (like the position of the tool) **changes** in relation to the machine-based coordinate system. Thus for example if you rotate the swivel head – and therefore the tool – in the B axis by +90°, **the coordinate system rotates also**. If you press the Z+ axis direction button in the MANUAL OPERATION mode, the tool moves in X+ direction of the machine-based coordinate system.
- In calculating the transformed coordinate system the TNC considers both the mechanically influenced offsets of the particular swivel head (the so-called "translational" components) **and** the offsets caused by tilting of the tool (3D tool length compensation).



Downloaded from www.Manualslib.com manuals search engine

## Traversing the reference marks in tilted axes

With tilted axes, you use the machine axis direction buttons to cross over the reference marks. The TNC interpolates the corresponding axes. Be sure that the function for tilting the working plane is active in the manual operating mode and the actual angle of the angular axis was entered in the menu field (see page 2-11).

## Setting the datum in a tilted coordinate system

After you have positioned the tilted axes, set the datum in the same way as for non-tilted axes—either manually by touching the workpiece with the tool (see page 2-7) or, much more easily, by allowing the part program to automatically set the datum with the aid of the HEIDENHAIN 3D touch probe system (see page 9-11).

The TNC then converts the datum for the tilted coordinate system. The angular values for this calculation are taken from the menu for manual tilting, regardless of whether the tilting function is active or not.

The angle values entered in the menu for manual tilting (see page 2-11) must match the actual position of the angular axes. Otherwise the TNC will calculate an incorrect datum.

## Position display in the tilted system

The positions displayed in the status window (NOML and ACTL) are in the tilted coordinate system.

## Limitations on working with the tilting function

- The touch probe function BASIC ROTATION cannot be used.
- PLC positioning (determined by the machine tool builder) is not possible.



Downloaded from www.Manualslib.com manuals search engine

## To activate manual tilting

| | |
|---|---|
| 3D ROT | Select menu for manual tilting. |
| ↑ oder ↓ | Select the tilt axis. |
| e.g. 4 5 ENT | Enter the tilt angle, here 45°. |
| ENT | Set TILT WORKING PLANE to ACTIVE. |
| END | Terminate input. |

A symbol for the tilted plane is shown in the status display whenever the TNC is moving the machine axes in the tilted plane.

If you set the function TILT WORKING PLANE for the operating mode PROGRAM RUN to ACTIVE, the tilt angle entered in the menu becomes active in the first block of the part program. If you are using cycle 19 WORKING PLANE in the part program, the angle values defined in the cycle (starting at the cycle definition) are effective. Angle values entered in the menu will then be overwritten.

### To reset

Set TILT WORKING PLANE to INACTIVE.

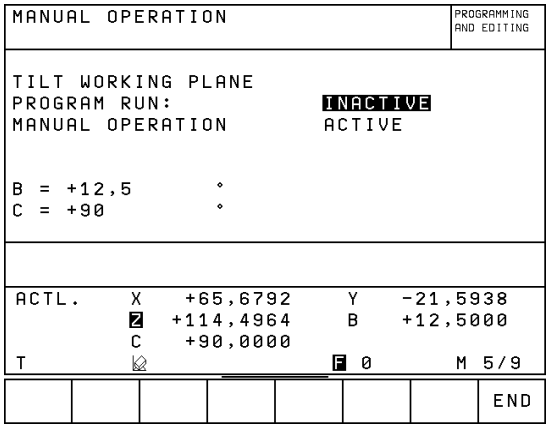


Fig. 2.7: Menu for manual tilting in the MANUAL OPERATION mode



Downloaded from www.Manualslib.com manuals search engine

## 3.1 Test Run

In the TEST RUN mode of operation the TNC checks programs and program sections for the following errors without moving the machine axes:

- Geometrical incompatibility
- Missing data
- Impossible jumps

The following TNC functions can be used in the TEST RUN operating mode:

- Blockwise test run
- Test interruption at any block
- Optional block skip
- Blockwise transfer of very long programs from external storage
- Functions for graphic simulation
- Measuring machining time
- Additional status display

### To run a program test:

- If the central tool file is active, the tool table for the program test must have the status S (see page 1-33).
- With the SET DATE MOD function you can activate a working-time control for the program test (see page 11-8).

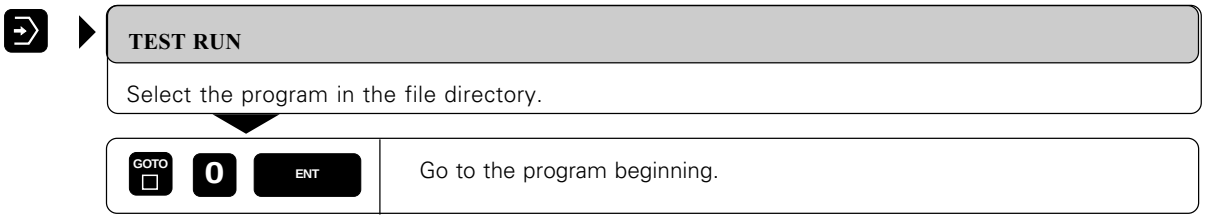


| Functions | Soft key |
|---|---|
| • Test the entire program | START |
| • Test each block individually | START SINGLE |
| • Show the blank form and test the entire program | RESET + START |
| • Interrupt the test run | STOP |



Downloaded from www.Manualslib.com manuals search engine

## To do a test run up to a certain block:

With the STOP AT N function the TNC does a test run up to a certain block with the block number N.

Select the TEST RUN mode and go to the program beginning.

| | |
|---|---|
| STOP AT N | Select a partial test run. |

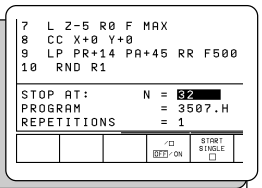


**STOP AT:** N =

**PROGRAM** =

**REPETITIONS** =

| | |
|---|---|
| e.g. 5 ENT | Enter the block number N at which you wish the test to stop. |
| e.g. 1 2 3 ENT | Enter the name of the program that contains the block with the block number N. |
| e.g. 1 ENT | If N is located in a program section repetition, enter the number of repetitions that you wish to run. |
| START | Test the program up to the entered block. |

## The display functions for test run

In the TEST RUN operating mode the TNC offers functions for displaying a program in pages.

| | |
|---|---|
| ◁ or ▷ | Shift the soft-key row. |

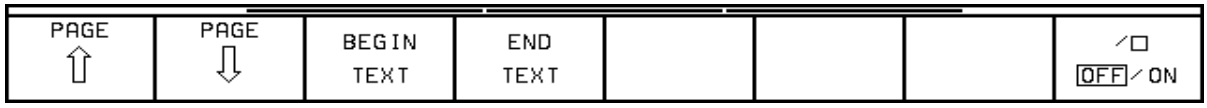


| Function | Soft key |
|---|---|
| • Go back in the program by one screen page | PAGE ⇩ |
| • Go forward in the program by one screen page | PAGE ⇧ |
| • Go to the program beginning | BEGIN TEXT |
| • Go to the program end | END TEXT |



Downloaded from www.Manualslib.com manuals search engine

## 3.2 Program Run

In the PROGRAM RUN / FULL SEQUENCE mode of operation the TNC executes a part program continuously to its end or up to a program stop.

In the PROGRAM RUN / SINGLE BLOCK mode of operation you execute each block separately by pressing the machine START BUTTON.

The following TNC functions can be used during a program run:

- Interrupt program run
- Start program run from a certain block
- Blockwise transfer of very long programs from external storage
- Block skip
- Editing and using the tool table TOOL.T
- Checking/changing Q parameters
- Functions for graphic simulation
- Additional status display.

### To run a part program:

- Clamp the workpiece to the machine table.
- Set the datum.
- Select the necessary tables and pallet files.

**PROGRAM RUN / SINGLE BLOCK**

or

**PROGRAM RUN / FULL SEQUENCE**

Select the part program and the necessary tables and pallet files in the file directory.

| | |
|---|---|
| GOTO □ 0 ENT | Go to the first block of the program. |
| I | Run the part program. |
| Only in mode PROGRAM RUN / SINGLE BLOCK<br>I<br>for each block | Run each block of the part program separately. |

Feed rate and spindle speed can be changed with the override knobs. You can superimpose handwheel positioning onto programmed axis movements during program run (see page 5-70).



Downloaded from www.Manualslib.com manuals search engine

## Interrupting machining

There are various ways to interrupt a program run:

- Programmed interruptions
- Machine STOP key
- Switching to PROGRAM RUN / SINGLE BLOCK

If the TNC registers an error during program run, it automatically interrupts machining.

### Programmed interruptions

Interruptions can be programmed directly in the part program. The part program is interrupted at a block containing one of the following entries:

- STOP
- Miscellaneous function M0, M02 or M30
- Miscellaneous function M06, if the machine tool builder has assigned it a stop function

**To interrupt or abort machining immediately:**

The block which the TNC is currently executing is not completed.

| | |
|---|---|
| | Interrupt machining. |

The ❊ sign in the status display blinks.

The part program can be aborted with the INTERNAL STOP function.

| | |
|---|---|
| INTERNAL STOP | Abort machining. |

The ❊ sign in the status display goes out.

**To interrupt machining at the end of the current block:**

You can interrupt the program run at the end of the current block by switching to the PROGRAM RUN / SINGLE BLOCK mode.

| | |
|---|---|
| | Select PROGRAM RUN / SINGLE BLOCK. |



Downloaded from www.Manualslib.com manuals search engine

## Moving machine axes during an interruption

You can move the machine axes during a program interruption in the same way as in the MANUAL OPERATION mode. Simply enable the machine axis direction buttons by pressing the MANUAL OPERATION soft key.

Example: retracting the spindle after a tool breaks

| | |
|---|---|
| | Interrupt machining. |
| 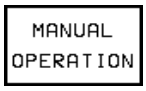  | Enable the machine axis direction buttons. |
| e.g. | Move the axes with the machine axis direction buttons. |

On some machines you may have to press the machine START button after the MANUAL OPERATION soft key to enable the axis direction buttons. See your machine tool manual.

## Resuming program run after an interruption

- If a program run is interrupted during a fixed cycle, the program must be resumed from the beginning of the cycle. This means that some machining operations will be repeated.
- If the program run is interrupted during a program section repeat or during a subprogram, you must use the function RESTORE POS AT N to resume program run from the same point.

When a program run is interrupted the TNC stores:

- The data of the last called tool
- Active coordinate transformations
- The coordinates of the last defined circle center

The stored data are used for returning the tool to the contour after manual machine axis positioning during an interruption (RESTORE POSITION).

**Resuming program run with the START button.**

You can resume program run by pressing the machine START button if the program was interrupted in one of the following ways:

- Pressing the machine STOP button
- A programmed interruption



Downloaded from www.Manualslib.com manuals search engine

**Resuming program run after an error**

- If the error message is not blinking:

Remove the cause of the error.

Clear the error message from the screen.

Restart the program, or resume program run at the place at which it was interrupted.

- If the error message is blinking:

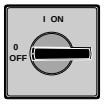


Switch off the TNC and the machine.

Remove the cause of the error.

Start again.

- If you cannot correct the error:

Write down the error message and contact your repair service agency.



Downloaded from www.Manualslib.com manuals search engine

## Mid-program startup

The RESTORE POS AT N function must be enabled by the machine tool manufacturer.

With the RESTORE POS AT N feature (block scan) you can run a part program beginning at any desired block. The TNC internally scans the program blocks up to that point. The workpiece machining can be graphically simulated.

If a part program has been interrupted with an INTERNAL STOP, the TNC automatically offers the interrupted block N for mid-program startup.

- Mid-program startup must not begin in a subprogram.
- All necessary programs, tables and pallet files must be selected in a program run mode of operation.
- If the part program contains a programmed interruption before the startup block, the block scan is interrupted. Press the machine START key to continue the block scan.
- After a block scan, return the tool to the calculated position with RESTORE POSITION.
- If a program is nested, you can use machine parameter 7680 to determine whether the block scan should start at block 0 of the main program or at block 0 of the last interrupted program.

| | |
|---|---|
| GOTO □ 0 ENT | Go to the first block of the current program to start a block scan. |
| RESTORE POS. AT N | Select mid-program startup. |
| **START-UP AT: N =**<br>**PROGRAM =**<br>**REPETITIONS =** | 3 TOOL DEF 1 L+0 R+4<br>4 TOOL CALL 1 Z S1000<br>START-UP AT: N = 32<br>PROGRAM = 3507.H<br>REPETITIONS = 1<br>ACTL. X +114,185 Y<br>Z +48,889 C<br>R +25,000 |
| e.g. 1 8 ENT<br>e.g. 1 2 3 4 ENT<br>e.g. 4 ENT | Enter the block number N at which the block scan should end.<br>Enter the name of the program containing the block N.<br>If block N is located in a program section repetition, enter the number of repetitions to be calculated in the block scan. |
| I | Start the block scan. |
| RESTORE POSITION | Return to the contour (see next page). |



Downloaded from www.Manualslib.com manuals search engine

## Returning to the contour

With the RESTORE POSITION function, the TNC returns the tool to the workpiece contour in the following situations:

- Return to contour after the machine axes were moved during a program interruption
- Return to the position that was calculated for mid-program startup

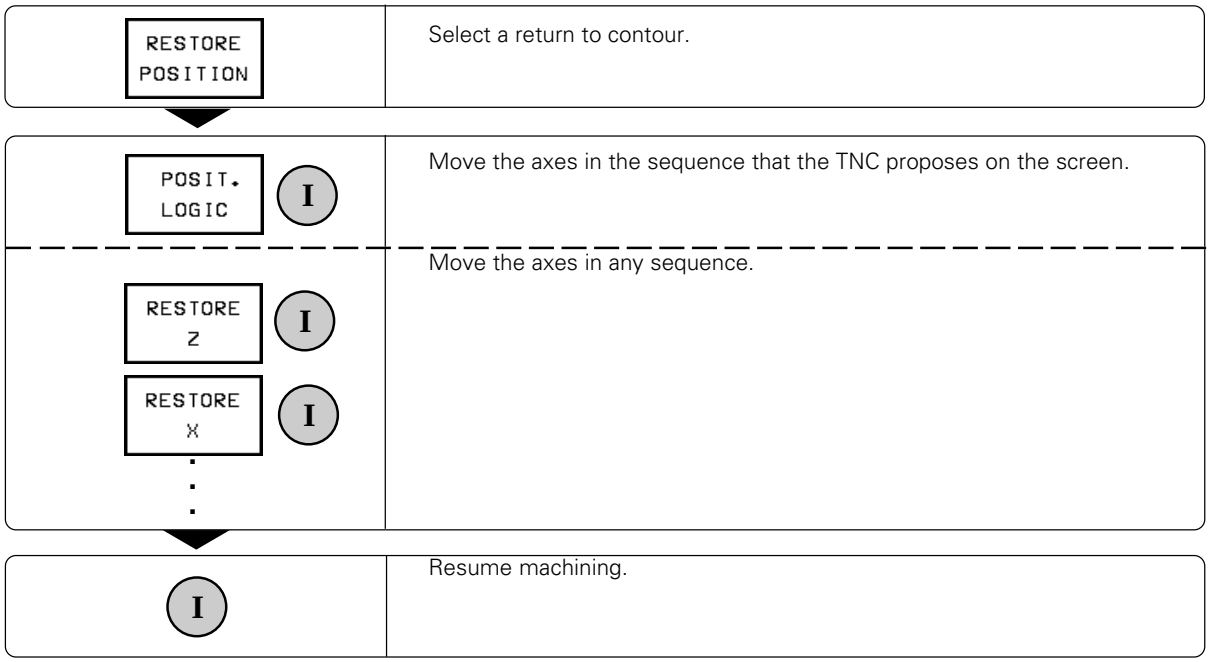




Downloaded from www.Manualslib.com manuals search engine

## 3.3 Optional Block Skip

In a test run or program run, the TNC can skip over blocks that you have programmed with a "/" character.

◁ or ▷ — Shift the soft-key row.

| PAGE ⇧ | PAGE ⇩ | BEGIN TEXT | END TEXT | | | | /□ OFF/ON |
|---|---|---|---|---|---|---|---|

/□ OFF/ON  /  /□ OFF/ON — Run or test the program with/without blocks preceded by a "/".

This function does not work for TOOL DEF blocks.



Downloaded from www.Manualslib.com manuals search engine

## 3.4 Blockwise Transfer: Testing and Executing Long Programs

Part programs that occupy more memory than the TNC provides can be "drip fed" block by block from an external storage device.

During program run, the TNC transfers program blocks from a floppy disk unit or PC through its data interface, and erases them after execution. This frees memory space for new blocks. Coordinate transformations remain active even when the cycle definition is erased.

To prepare for blockwise transfer:

- Configure the data interface with the MOD function RS-232/422-SETUP (see page 11-4).
- If you wish to transfer a part program from a PC, adapt the TNC and PC to each other (see pages 10-5 and 12-3).
- Ensure that the transferred program meets the following requirements:
  - The program must not contain subprograms.
  - The program must not contain program section repetitions.
  - All programs that are called from the transferred program must be selected (Status M).

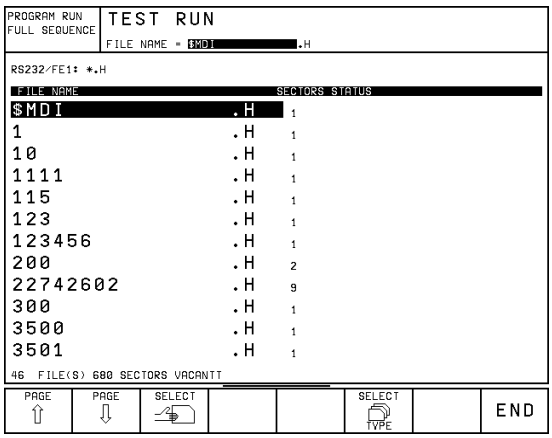


Fig. 3.1: TNC screen during blockwise transfer

**PROGRAM RUN / SINGLE BLOCK**

or

**PROGRAM RUN / FULL SEQUENCE**

or

**TEST RUN**

| | |
|---|---|
| EXT | Show directory of files in external storage. The soft-key row shifts. |

Select the program.

| | |
|---|---|
| SELECT | Start data transfer. |
| PROGRAM RUN: I | Transfer and execute the program blocks. |
| TEST RUN: START | Transfer and test the program blocks. |

If the data transfer is interrupted, press the START key again.



Downloaded from www.Manualslib.com manuals search engine

### Jumping over blocks

The TNC can jump over blocks to begin transfer at any desired block. These blocks are then ignored during a program run or test run.

Select the program and start data transfer.

| | |
|---|---|
| GOTO □ e.g. 1 5 0 ENT | Go to the block number at which you wish to begin data transfer, for example 150. |
| PROGRAM RUN: I | Execute the transferred blocks, starting with the block number that you entered. |
| TEST RUN: START | Test the transferred blocks, starting with the block number that you entered. |

A tool can be replaced automatically if the maximum tool life (TIME1 or TIME2) has been reached (see page 4-16).

You can use machine parameters (see page 12-11) to define the memory range to be used during blockwise transfer. This prevents the transferred program from filling the program memory and disabling the background programming feature.

As an alternative, you can call the external program with CALL PGM EXT (see page 6-8) and perform a mid-program startup (see page 3-8).

Example: To perform a mid-program start-up from block 12834 of external program GEH35K1 proceed as follows:

– Write the following short program:
0 BEGIN PGM START-UP MM
1 CALL PGM EXT:GEH35K1
2 END PGM START-UP MM

– Select the START-UP program in the PROGRAM RUN/FULL SEQUENCE mode of operation.

– Select the RESTORE POS AT N function and enter the desired block number, here 12834, for START-UP AT and the desired program, here GEH35K1, for PROGRAM.

– Start block scan with the NC START key.



Downloaded from www.Manualslib.com manuals search engine

# 4 Programming

In the PROGRAMMING AND EDITING mode of operation (see page 1-32) you can

- create files,
- add to files, and
- edit files.

This chapter describes the basic functions and input that do not yet cause machine axis movement. The entry of geometry for workpiece machining is described in the next chapter.

## 4.1 Creating Part Programs

### Layout of a program

A part program consists of individual program blocks. The TNC numbers the blocks in ascending sequence. Program blocks contain units of information called *words*.

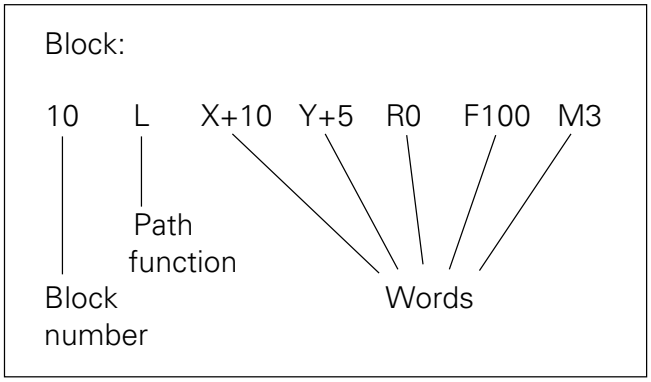


Fig. 4 1: Program blocks contain words of specific information

### Plain language dialog

You initiate a dialog for conversational programming by pressing a function key (see inside front cover). The TNC then asks you for all the information necessary to program the desired function. After you have answered all the questions, the TNC automatically ends the dialog.

If only a few of the words in a block need be programmed, you can cut off the dialog and end the block before the dialog is finished.

| Function | Key |
|---|---|
| • Continue the dialog | ENT |
| • Ignore the dialog question | NO ENT |
| • End the dialog immediately | END |
| • Abort the dialog and erase the block | DEL |



Downloaded from www.Manualslib.com manuals search engine

## Editing functions

Editing means entering, adding to or changing commands and information for the TNC.

The TNC enables you to

- Enter data with the keyboard
- Select desired blocks and words
- Insert and erase blocks and words
- Correct erroneously entered values and commands
- Easily clear TNC messages from the screen

### Types of input

Numbers, coordinate axes and radius compensation are entered directly by keyboard. You can set the algebraic sign either before, during or after a numerical entry.

### Selecting blocks and words

- To call a block with a certain block number:

| | |
|---|---|
| GOTO □ e.g. 1 0 ENT | The highlight jumps to block number 10. |

- To move one block forwards or backwards:

| | |
|---|---|
| ↑ or ↓ | Press the vertical cursor keys. |

- To select individual words in a block:

| | |
|---|---|
| ← or → | Press the horizontal cursor keys. |

- To find the same word in other blocks:

For this function the AUTO DRAW soft key must be set to OFF.

| | |
|---|---|
| ← or → | Select the word in the block. |
| ↑ or ↓ | Find the same word in other blocks. |

### Inserting a block

Additional program blocks can be inserted behind any existing block (except the PGM END block).

| | |
|---|---|
| ↑ or ↓ / GOTO □ | Select the block in front of the desired insertion. |

Program the new block.

The block numbers of all subsequent blocks are automatically increased by one.



Downloaded from www.Manualslib.com manuals search engine

### Editing and inserting words

Highlighted words can be changed as desired: simply overwrite the old value with the new one. Plain language dialog indicates the type of information required. After entering the new information, press a horizontal cursor key or the END key to confirm the change.

In addition to changing the existing words in a block, you can also add new words with the aid of the plain language dialog.

### Erasing blocks and words

| Function | Key |
|---|---|
| • Set the selected number to 0 | CE |
| • Erase an incorrect number | CE |
| • Clear a non-blinking error message | CE |
| • Delete the selected word | NO ENT |
| • Delete the selected block | DEL □ |
| • Erase cycles and program sections:<br>First select the last block of the cycle or program section to be erased. | DEL □ |



Downloaded from www.Manualslib.com manuals search engine

## 4.2 Structuring Programs

The most convenient way to structure programs is to switch the screen layout to PGM+SECTION (see page 1-6).

To keep track of long programs you can enter structuring blocks as texts in the TNC program. The TNC then displays these structuring blocks in the right screen window. To page through the program you can:

- Scroll up and down in the program NC block by NC block in the left screen window
- Scroll up and down in the program structuring block by structuring block in the right window

If you are scrolling through the program block by block in the right screen window, the TNC at the same time automatically moves the corresponding NC blocks in the left window. This way you can skip any desired number of NC blocks by simply pressing a key. With the aid of the CHANGE WINDOW soft key, you can switch from the left to the right window, and vice versa. The background color of the screen window can be selected through machine parameters.

The CHANGE LEVEL soft key determines for which of the two available levels a structuring block is defined. The second level is indented in the screen window (see Fig. 4.3).

You can edit existing structuring texts and the level of a structuring block for both windows by moving the highlight with the horizontal cursor keys to the block to be changed.

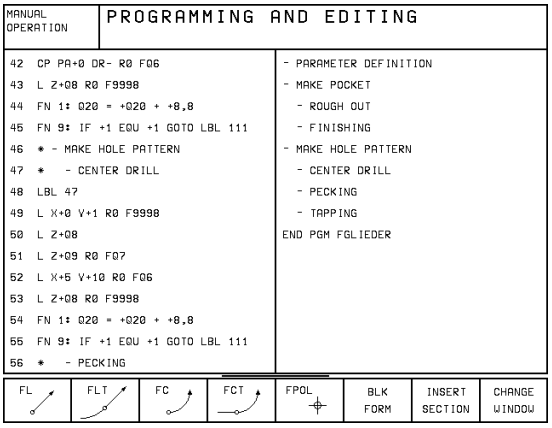


Fig. 4.2 TNC screen for structuring programs: left screen window is active

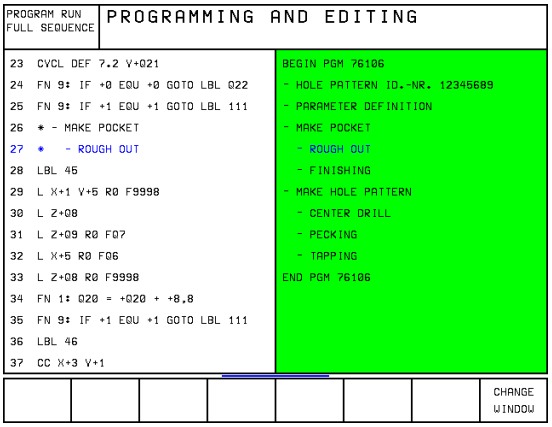


Fig. 4.3 TNC screen for structuring programs: right screen window is active

### Inserting a structuring block in the left screen window

You initiate the dialog for structuring block entry by pressing the INSERT SECTION soft key. The structuring block is inserted behind the current block.

INSERT SECTION

**STRUCTURING TEXT ?**

Enter the structuring text with the ASCII keyboard (244 characters maximum).

| | |
|---|---|
| CHANGE LEVEL | If necessary, change the level of the structuring block. You can choose from two levels. |

### Inserting a structuring block in the right screen window

Simply enter the text with the ASCII keyboard; the TNC automatically inserts the new structuring block behind the active structuring block.



Downloaded from www.Manualslib.com manuals search engine

# 4.3 Tools

Each tool is identified by a number.

The tool data, consisting of the:

- length L, and
- radius R

are assigned to the tool number.

The tool data can be entered:

- into the individual part program in a TOOL DEF block, or
- once for each tool into a common tool table that is stored as a type .T file.

Once a tool is defined, the TNC then associates its dimensions with the tool number, and accounts for them when executing positioning blocks.

The way the tool is used is influenced by several miscellaneous functions (see page 12-14).

## Setting the tool data

### Tool numbers

Each tool is designated with a number between 0 and 254.

With TOOL CALL and TOOL DEF the tool with the number 0 is automatically defined with the length L = 0 and the radius R = 0. In tool tables, tool 0 should also be defined with L = 0 and R = 0.

### Tool radius R

The radius of the tool is entered directly.

### Tool length L

The compensation value for the tool length is measured

- as the difference in length between the tool and a zero tool, or
- with a tool pre-setter.

A tool pre-setter eliminates the need to define a tool in terms of the difference between its length and that of another tool.



Downloaded from www.Manualslib.com manuals search engine

## Oversizes for lengths and radii – Delta values

In tool tables and in a TOOL CALL block you can enter so-called delta values for tool length and radius.

- Positive delta values - tool oversize
- Negative delta values- tool undersize

The TNC adds the delta values from the table and the TOOL CALL block.

### Applications

- Undersize in the tool table for wear
- Oversize in the TOOL CALL block, for example as a finishing allowance during roughing.

Delta values can be numerical values, Q parameters (only in a TOOL CALL block) or the value 0. Maximum permissible oversize or undersize is +/- 99.999 mm.

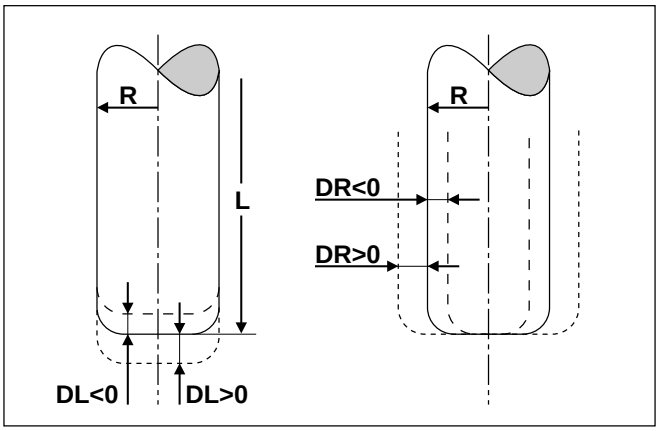


Fig. 4.4: Oversizes DL, DR on a toroid cutter

### Determining tool length with a zero tool

For the sign of the tool length L:

$L > L_0$ The tool is longer than the zero tool
$L < L_0$ The tool is shorter than the zero tool

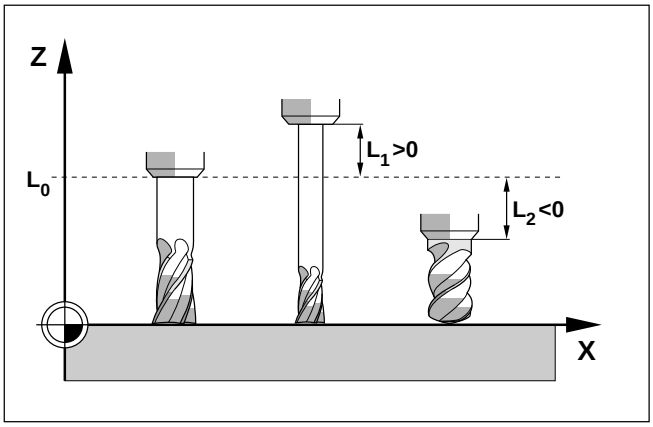


Fig. 4.5: Tool lengths are entered as the difference from the zero tool

Move the zero tool to the reference position in the tool axis (e.g. workpiece surface with Z = 0).

If necessary, set the datum in the tool axis to 0.

Change tools.

Move the new tool to the same reference position as the zero tool.

The TNC displays the compensation value for the length L.

Write the value down and enter it later.

Enter the display value by using the "actual position capture" function (see page 4-30).



Downloaded from www.Manualslib.com manuals search engine

## Entering tool data into the program

The following data can be entered once for each tool in the part program:

- Tool number
- Tool length compensation value L
- Tool radius R

**To enter tool data in the program block:**

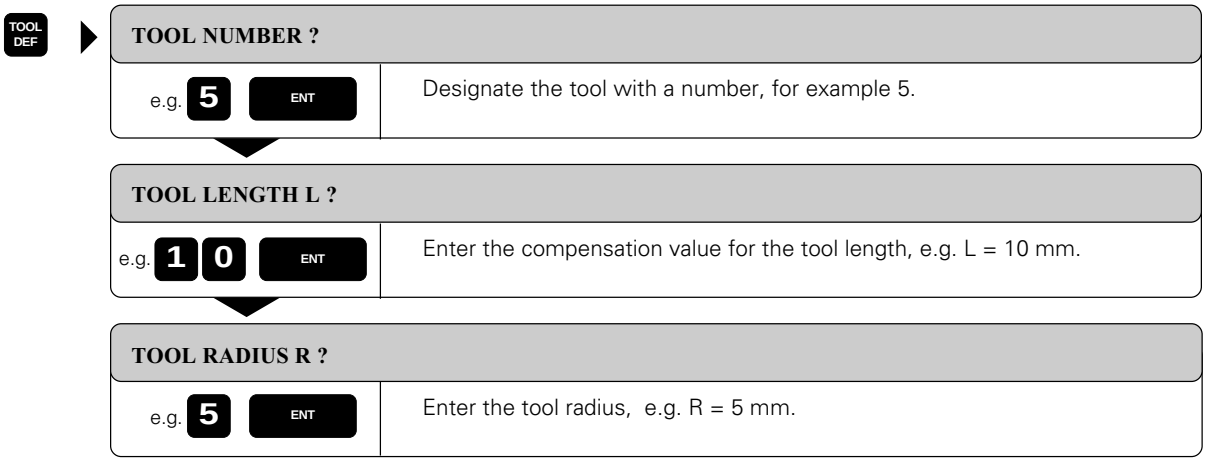


*Resulting NC block: TOOL DEF 5 L+10 R+5*

You can enter the tool length L directly in the tool definition by using the “actual position capture” function (see page 4-30).



Downloaded from www.Manualslib.com manuals search engine

## Entering tool data in tables

A tool table is a file in which the tool data for all tools are stored commonly. The maximum number of tools per table (0 to 254) is set in machine parameter MP 7260.

On machines with automatic tool changers, the tool data must be stored in tool tables. You can edit tool tables using special, time-saving editing functions.

### Types of tool tables

Tool table TOOL.T
- is used for machining
- is edited in a program run mode of operation

All other tool tables
- are used for test runs and archiving
- are edited in the PROGRAMMING AND EDITING mode of operation

If you copy a tool table into TOOL.T for a program run, the old TOOL.T will be erased and overwritten.

### Editing functions for tool tables

The following functions help you to create and edit tool tables:

| Function | Key / Soft key |
|---|---|
| • Move the highlight | |
| • Go to the beginning/end of the table | 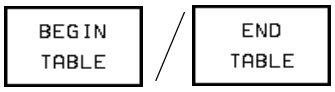  |
| • Go to the next/previous table page | 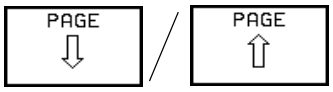  |
| • Go to the beginning of the next line | 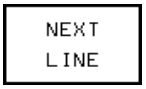  |
| • Look for the tool name in the tool table | |



Downloaded from www.Manualslib.com manuals search engine

**To edit the tool table TOOL.T:**

**PROGRAM RUN / SINGLE BLOCK**

or

**PROGRAM RUN / FULL SEQUENCE**

| | |
|---|---|
| TOOL TABLE | Select the tool table TOOL.T. |
| EDIT OFF / ON | Switch the EDIT soft key to ON. |

**To edit any other tool table:**

**PROGRAMMING AND EDITING**

| | |
|---|---|
| PGM NAME | Call the file directory. |
| ▷ SHOW .T | Shift the soft-key row and show file type .T. |

**FILE NAME = .T**

Select the tool table.

Enter a new file name and create a new table.



Downloaded from www.Manualslib.com manuals search engine

## Tool data in tables

The following information can be entered in tool tables:

- Tool radius and tool length: R, L
- Curvature radius of the tool point for three-dimensional tool compensation: R2
  For graphic display of machining with a spherical cutter, enter R2 = R.
- Oversizes (delta values) for tool radii and tool lengths: DR, DR2, DL
- Length of the tool cutting edge: LCUTS
- Maximum plunge angle: ANGLE
- Tool name: NAME
- Maximum and current tool life: TIME1, TIME2, CUR.TIME
- Number of a Replacement Tool: RT
- Tool Lock: TL
- Tool comment: DOC
- Information on this tool for the Programmable Logic Control (PLC — adapts the TNC to the machine tool): PLC

The TNC needs the following tool data for automatic tool measurement:

- Number of teeth: CUT
- Wear tolerance for tool length: LTOL
- Wear tolerance for tool radius: RTOL
- Cutting direction for dynamic tool measurement: DIRECT
- Offset of the tool from center of stylus to center of tool: TT:R-OFFS
  Default value: Tool radius R
- Offset of the tool from top of stylus to the tool tip:
  TT:L-OFFS
  Default value: 0
- Breakage tolerance for tool length: LBREAK
- Breakage tolerance for tool radius: RBREAK

A general user parameter (MP7266) defines which data can be entered in the tool table and in which sequence the data is displayed.

The sequence of the information in the tool table shown in the illustrations to the right is only one example out of many possibilities.

If all the information in a table no longer fits on one screen, this is indicated with a ">>" or "<<" symbol in the line with the table name.

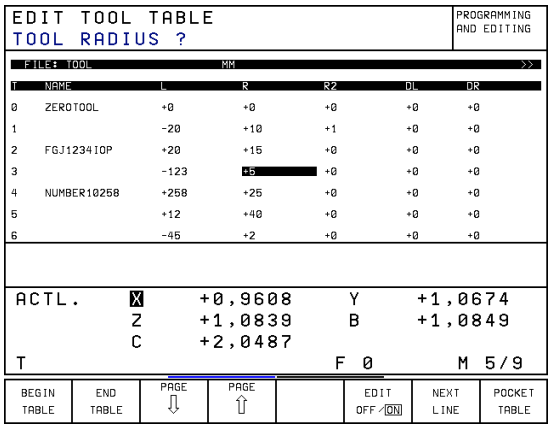


Fig. 4.6: Left part of the tool table

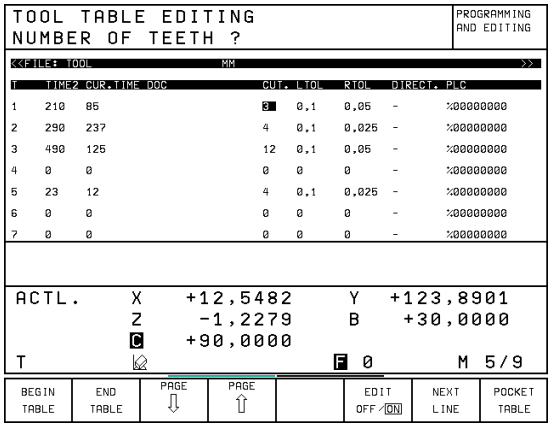


Fig. 4.7: Right part of the tool table

**To read-out or read-in a tool table** (see page 10-2)**:**

| | |
|---|---|
| EXT | Select external data input/output directly from the table. |
| TRANSFER TNC⇨EXT | Read-out the table. |
| TRANSFER TNC⇦EXT | Read-in the table (only possible if EDIT ON is selected). |



Downloaded from www.Manualslib.com manuals search engine

**Overview: Information in tool tables**

| Abbrev. | Input | Dialog |
|---|---|---|
| T | Number by which the tool is called in the program | – |
| NAME | Name by which the tool is called in the program | TOOL NAME ? |
| L | Value for tool length compensation | TOOL LENGTH L ? |
| R | Tool radius R | TOOL RADIUS R ? |
| R2 | Tool radius R2, for toroid cutters (only for 3D radius compensation or graphical representation of a machining operation with spherical or toroid cutters) | TOOL RADIUS 2 ? |
| DL | Delta value for tool length | TOOL LENGTH OVERSIZE ? |
| DR | Delta value for tool radius R | TOOL RADIUS OVERSIZE ? |
| DR2 | Delta value for tool radius R2 | TOOL RADIUS OVERSIZE 2 ? |
| LCUTS | Length of tool's cutting edge: required by the TNC for Cycle 22 | TOOTH LENGTH IN THE TOOL AXIS ? |
| ANGLE | Maximum plunge angle of the tool for reciprocating plunge | MAXIMUM PLUNGE ANGLE ? |
| TL | Tool lock | TOOL LOCKED YES=ENT/NO=NOENT |
| RT | Number of a Replacement Tool, if available (see also TIME2) | REPLACEMENT TOOL ? |
| TIME1 | Maximum tool age in minutes. The meaning of this information can vary depending on the individual machine tool. Your machine manual provides more information on TIME1. | MAXIMUM TOOL AGE ? |
| TIME2 | Maximum tool life in minutes during TOOL CALL: If the current tool life exceeds this value, the TNC changes the tool during the next TOOL CALL (see also CUR.TIME). | MAX. TOOL AGE FOR TOOL CALL ? |
| CUR.TIME | Time in minutes that the tool has been in use: The TNC automatically counts the current tool life. A starting value can be entered for used tools. | CURRENT TOOL AGE ? |
| DOC | Comment on tool (up to 16 characters) | TOOL DESCRIPTION ? |
| PLC | Information on this tool that should be transferred to the PLC | PLC STATUS ? |



Downloaded from www.Manualslib.com manuals search engine

**Information in tool tables *(continued)***

| Abbrev. | Input | Dialog |
|---|---|---|
| CUT. | Number of teeth that are measured in automatic tool measurement (max. 20 teeth) | NUMBER OF TEETH ? |
| LTOL | Permissible deviation from tool length L during automatic tool measurement. If the entered value is exceeded, the TNC locks the tool (status L). Input range: 0 to 0.9999 mm | WEAR TOLERANCE: LENGTH ? |
| RTOL | Permissible deviation from tool radius R during automatic tool measurement. If the entered value is exceeded, the TNC locks the tool (status L). Input range: 0 to 0.9999 mm | WEAR TOLERANCE: RADIUS ? |
| DIRECT. | Automatic tool measurement: Cutting direction of the tool for dynamic tool measurement | CUTTING DIRECTION ( M3 = – ) ? |
| TT:R-OFFS | Automatic tool length measurement: Offset of the tool between the stylus center and the tool center. Default setting: tool radius R | TOOL OFFSET: RADIUS ? |
| TT:L-OFFS | Automatic tool radius measurement: tool offset in addition to the value in MP 6530 (see S. 12-6) between the stylus top and the tool tip. Default setting: 0 | TOOL OFFSET: LENGTH ? |
| LBREAK | Automatic tool measurement: permissible deviation from the tool length L for breakage detection. If the entered value is exceeded, the TNC locks the tool (Status L). Input range: 0 to 0.9999 mm | BREAKAGE TOLERANCE: LENGTH ? |
| RBREAK | Automatic tool measurement: permissible deviation from the tool length R for breakage detection. If the entered value is exceeded, the TNC locks the tool (Status L). Input range: 0 to 0.9999 mm | BREAKAGE TOLERANCE: RADIUS ? |



Downloaded from www.Manualslib.com manuals search engine

## Pocket table for tool changer

The **TOOL_P** table (for tool pocket) is programmed in a program run operating mode.

The NEW POCKET TABLE or also the RESET POCKET TABLE soft key is for erasing an existing pocket table and writing a new one. Like the tool table, a pocket table can also be read-in and read-out directly through the data interface (see page 4-11).

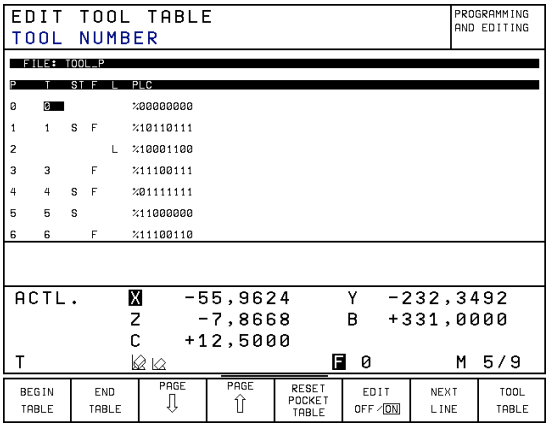


Fig. 4.8: Pocket table for the tool changer

**To select the pocket table:**

| | |
|---|---|
| TOOL TABLE | Select tool table. |
| POCKET TABLE | Select pocket table. |
| EDIT OFF/ON | Set the EDIT soft key to ON. |

**To edit the pocket table:**

| Abbrev. | Input | Dialog |
|---|---|---|
| P | **P**ocket number of the tool in the tool magazine | – |
| T | **T**ool number | TOOL NUMBER |
| F | **F**ixed tool number. The tool is always returned to the same pocket. | FIXED TOOL<br>YES = ENT / NO = NOENT |
| L | **L**ocked pocket | POCKET LOCKED<br>YES = ENT / NO = NOENT |
| ST | **S**pecial **T**ool<br>If this ST requires also the pockets in front of and behind its own pocket, then lock the appropriate number of pockets. | SPECIAL TOOL |
| PLC | Information on this tool that should be sent to the PLC | PLC STATUS |

Overview: Data in the pocket table



Downloaded from www.Manualslib.com manuals search engine

## Calling tool data

The following data can be programmed in the TOOL CALL block:

- Tool number, Q parameter or tool name
  (name only if a tool table is active)
- Spindle axis
- Spindle speed
- Oversize for the tool length DL
- Oversize for the tool radius DR

D represents the Greek letter delta, which is used as a symbol for differences and deviations.

**To call tool data:**

TOOL CALL

**TOOL NUMBER ?**

e.g. 5 ENT — Enter the number of the tool as defined in the tool table or in a TOOL DEF block, for example 5.

**WORKING SPINDLE AXIS X/Y/Z?**

e.g. Z — Enter the spindle axis, e.g. Z.

**SPINDLE SPEED S=?**

e.g. 5 0 0 ENT — Enter the spindle speed, e.g. S=500 rpm.

**TOOL LENGTH OVERSIZE ?**

e.g. 0 . 2 ENT — Enter delta values for the tool length, e.g. DL = 0.2 mm.

**TOOL RADIUS OVERSIZE ?**

e.g. -/+ 1 ENT — Enter delta values for the tool radius, e.g. DR = –1 mm.

*Resulting NC block: TOOL CALL 5 Z S500 DL+0.2 DR–1*

### Tool pre-selection with tool tables

If you are using tool tables, you use TOOL DEF to pre-select the next tool. Simply enter the tool number, a tool name, or a corresponding Q parameter.



Downloaded from www.Manualslib.com manuals search engine

## Tool change

Tool change is a machine tool dependent function. See your machine tool manual.

## Automatic tool change

If your machine is built for automatic tool changing, the TNC controls the replacement of the inserted tool by another from the tool magazine. The program run is not interrupted.

### Manual tool change

To change the tool manually, stop the spindle and move the tool to the tool change position. Sequence of action:

- Move to the tool change position (under program control, if desired)
- Interrupt program run (see page 3-5)
- Change the tool
- Continue the program run (see page 3-6)

### Tool change position

A tool change position must lie next to or above the workpiece to prevent tool collision. With the miscellaneous functions M91 and M92 (see page 5-65) you can enter machine-referenced rather than workpiece-referenced coordinates for the tool change position.

If TOOL CALL 0 is programmed before the first tool call, the TNC moves the tool spindle in the tool axis to a position that is independent of the tool length.



Downloaded from www.Manualslib.com manuals search engine

## Automatic tool change: M101

M101 is a machine tool dependent function. See your machine tool manual.

## Standard behavior — without M101

If the tool reaches the maximum tool life (TIME1) during program run, the TNC internally flags this data. The machine tool builder determines how the machine tool reacts to this information.

### Automatic tool change – with M101

The TNC automatically changes the tool if the tool life (TIME1 or TIME2) expires during program run. The tool is not changed immediately upon expiry, but – depending on the workload of the processor – a few NC blocks later.

### Duration of effect

M101 is reset with M102.

### Standard NC blocks with radius compensation R0, RR, RL

The radius of the replacement tool must be the same as that of the original tool. If the radii are not equal, the TNC displays an error message and does not replace the tool.

### NC blocks with surface-normal vectors and 3D compensation

The radius of the replacement tool can differ from the radius of the original tool. The tool radius is not included in program blocks transmitted from CAD systems. A negative delta value (DR) can be entered in the tool table.

If DR is positive, the TNC displays a message and does not change the tool. You can suppress this message with the M function M107, and reactivate it with M108.



Downloaded from www.Manualslib.com manuals search engine

## 4.4 Tool Compensation Values

For each tool, the TNC adjusts the spindle path in the tool axis by the compensation value for the tool length. In the working plane it compensates for the tool radius.

When up to five axes are being programmed in one block (rotary axes are also permitted) the TNC accounts for the tool radius compensation value only in the working plane.

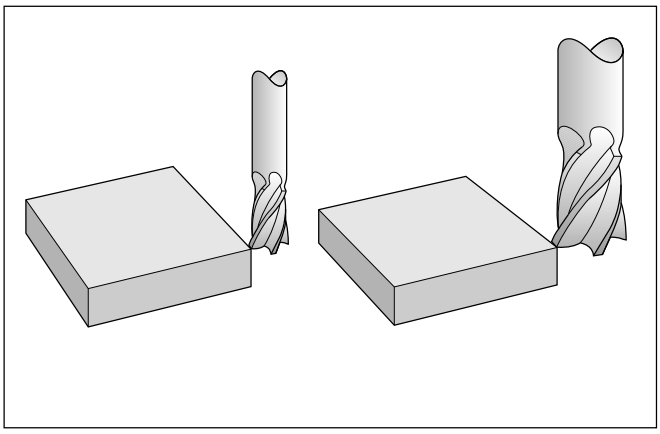

Fig. 4.9: The TNC must compensate the length and radius of the tool

If a part program generated by CAD system contains surface-normal vectors, the TNC can also perform three-dimensional tool compensation (see page 4-21).

### Effect of tool compensation values

#### Tool length

The compensation value for the tool length is calculated as follows:

**Compensation value = L + DL_TC + DL_TAB**

where
- L: is the tool length L (from the TOOL DEF block or the tool table)
- DL_TC: is the oversize for length DL in the TOOL CALL block
- DL_TAB: is the oversize for length DL in the tool table

Length compensation becomes effective automatically as soon as a tool is called and the tool axis moves. Length compensation is cancelled by calling a tool with the length L = 0.

If a positive length compensation was in effect before TOOL CALL 0, the clearance to the workpiece is reduced. If the tool is traversed to incremental positions in the tool axis after TOOL CALL, the TNC not only moves the tool according to the programmed value but also accounts for the difference between the length of the old tool and that the new one.

#### Tool radius

The compensation value for the tool radius is calculated as follows:

**Compensation value = R + DR_TC + DR_TAB**

where
- R: is the tool radius R (from the TOOL DEF block or the tool table)
- DR_TC: is the oversize for radius DR in the TOOL CALL block
- DR_TAB: is the oversize for radius DR in the tool table

Radius compensation becomes effective as soon as a tool is called and is moved in the working plane with RL or RR. Radius compensation is cancelled by programming a positioning block with R0.



Downloaded from www.Manualslib.com manuals search engine

## Tool radius compensation

A tool movement can be programmed:

- Without radius compensation: R0
- With radius compensation: RL or RR
- As single-axis movements with R+ or R-

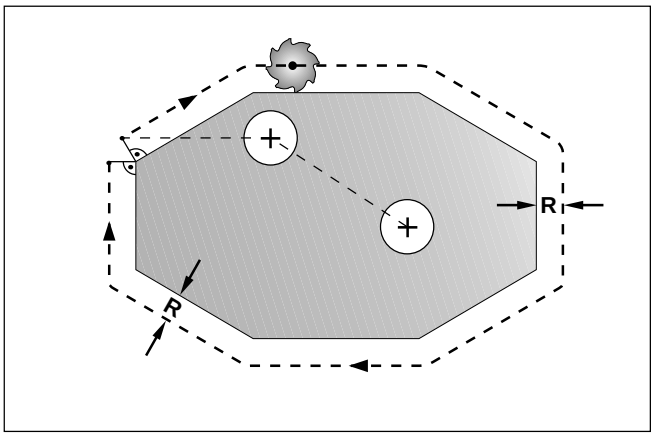


Fig. 4.10: Programmed contour (—, +) and the path of the tool center (- - -)

### Tool movement without radius compensation: R0

The tool center moves to the programmed coordinates.

Applications:

- Drilling and boring
- Pre-positioning

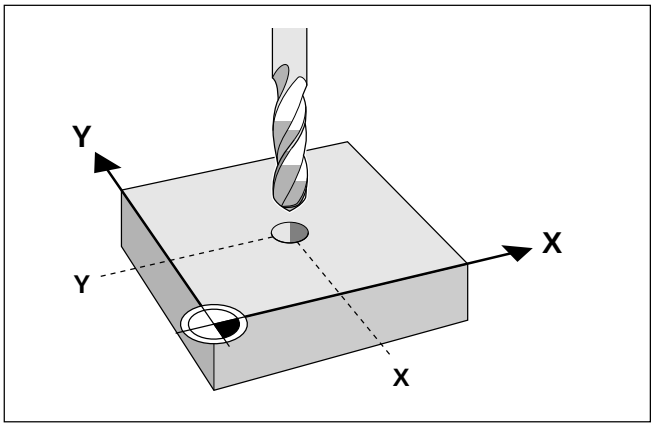


Fig. 4.11: These drilling positions are entered without radius compensation

To position without radius compensation:

| TOOL RADIUS COMP.RL/RR/NO COMP.? | |
|---|---|
| ENT | Select tool movement without radius compensation. |

.
.
.



Downloaded from www.Manualslib.com manuals search engine

**Tool movement with radius compensation RR, RL**

The tool center moves to the left (RL) or to the right (RR) of the programmed contour at a distance equal to the radius. Right or left is meant as seen in the direction of tool movement as if the workpiece were stationary.

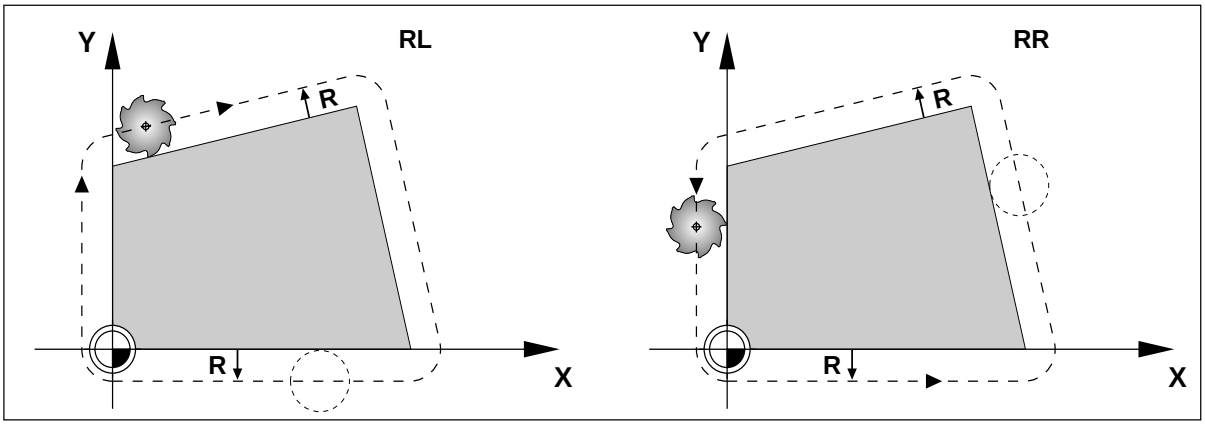


Fig. 4.12: The tool moves to the left (RL) or to the right (RR) of the workpiece during milling

To position with radius compensation:

. . .

| TOOL RADIUS COMP.RL/RR/NO COMP.? | |
|---|---|
| RL | Select tool movement to the left of the programmed contour. |
| RR | Select tool movement to the right of the programmed contour. |

- Between two program blocks with different radius compensation values you must program at least one block without radius compensation (that is, with R0).
- Radius compensation is not in effect until the end of the block in which it is first programmed.
- The TNC always positions the tool perpendicular to the starting or end point during activation and deactivation of radius compensation. Always position the tool in front of the first contour point (or behind the last contour point) so that the tool will not gouge the workpiece.



Downloaded from www.Manualslib.com manuals search engine

**Shortening or lengthening single-axis movements R+, R-**

This type of radius compensation is possible only for single-axis movements in the working plane: The programmed tool path is shortened (R-) or lengthened (R+) by the tool radius.

Applications:

- Single-axis machining
- Occasionally for pre-positioning the tool, such as for a SLOT MILLING cycle.

- You can enable R+ and R- by opening a positioning block with an orange axis key.
- The machine tool builder can set machine parameters to inhibit the possibility of programming single-axis positioning blocks

## Machining corners

If you work without radius compensation, you can influence the machining of outside corners with M90 (see page 5-62).

**Outside corners**

The TNC moves the tool in a transitional arc around outside corners. The tool "rolls around" the corner point.

If necessary, the feed rate F is automatically reduced at outside corners to reduce machine strain, for example at very great changes in direction.

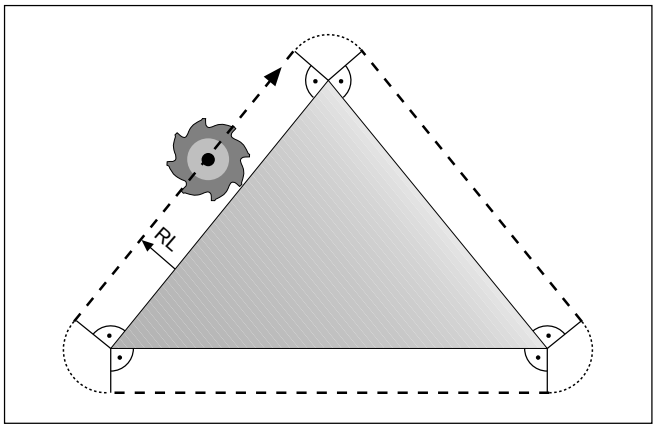


Fig. 4.13: The tool "rolls around" outside corners

Do not place the starting point (or end point) on a corner of an internal contour. Otherwise the TNC may gouge the contour.

**Inside corners**

The TNC calculates the intersection of the tool center paths at inside corners. From this point it then starts the next contour element. This prevents damage to the workpiece.

The permissible tool radius, therefore, is limited by the geometry of the programmed contour.

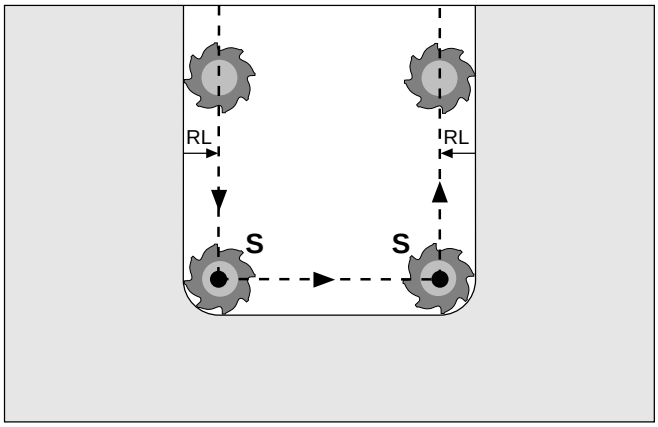


Fig. 4.15: Tool path for inside corners



Downloaded from www.Manualslib.com manuals search engine

## 4.5 Three-Dimensional Tool Compensation (Not on TNC 407)

This TNC feature uses straight-line blocks that include tool radius compensation in terms of surface-normal vectors (see below) that have been calculated by a CAD system.

The TNC calculates a three-dimensional (3D) tool compensation so that tools can be used that have slightly different dimensions than the one originally used.

3D compensation can be performed for the tool shapes illustrated in Fig. 4.16

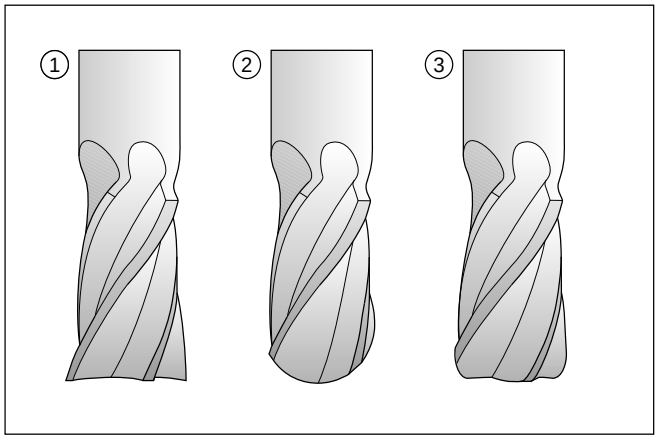


Fig. 4.15: Tool shapes for 3D compensation: end mill (1), spherical cutter (2), toroid cutter (3)

**Defining tool shapes for 3D compensation**

Two types of radii, R and R2, can be entered in the tool table:

- TOOL RADIUS – R
  Distance from the tool axis to the tool circumference (tool "thickness").
- TOOL RADIUS 2 – R2
  Dimension for the curvature of the tool point: distance from the center of a circle derived from the arc of curvature to the curve itself.

The second radius value (R2) determines the shape of the tool:

- End mill R2 = 0
- Toroid cutter 0 < R2 < R
- Spherical cutter R2 = R

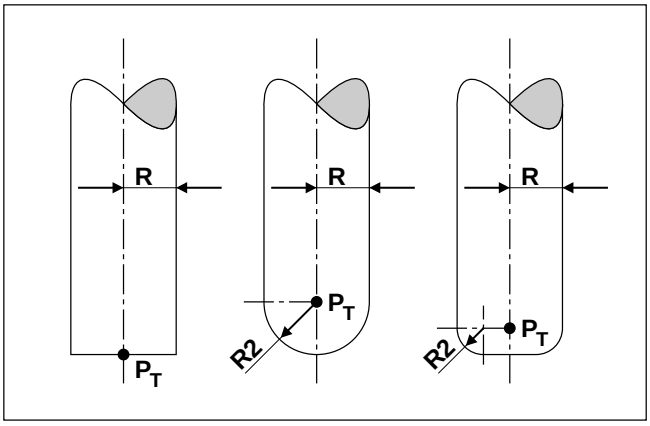


Fig. 4.16: Tool datum P, tool radii R and R2 on end mills, spherical and toroid cutters

**Surface-normal vectors NX, NY, NZ**

For 3D compensation the TNC uses three additional words in the NC block (NX, NY and NZ): one for each compensated axis in the Cartesian coordinate system.

The CAD system calculates NX, NY and NZ, which are transferred to the TNC together with the contouring commands.

NX, NY and NZ are the "components" of the directional data for 3D compensation. Such directional data is called a "vector."

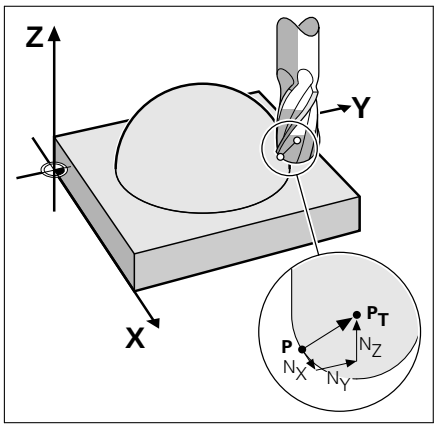


Fig. 4.17: Surface-normal vectors and tool position during 3D compensation



Downloaded from www.Manualslib.com manuals search engine

A vector always has

- a magnitude (e.g. a distance) and
- a direction (e.g. away from the workpiece)

If a vector is perpendicular ("**normal**") to a surface, it is called a **surface-normal vector**.

The TNC can compensate small differences in tool sizes in the surface-normal vector NX, NY, NZ. It calculates NX, NY and NZ up to an accuracy of seven places behind the millimeter decimal point.

### Target direction of the surface-normal vector

The surface-normal vectors point from the workpiece surface to the tool datum $P_T$ (see Fig. 4.16 and 4.17).

$P_T$ lies on the tool axis. On end mills it lies on the surface of the tool end. On spherical cutters and toroid cutters, $P_T$ lies at the point on the tool axis where the curvature begins.

- The coordinates for the X, Y, Z positions and the normal vector components NX, NY, NZ must be in the same sequence in the NC block.
- 3D compensation with normal vectors is only available for coordinates X, Y and Z.
- The TNC will not display an error message if an entered tool oversize would cause contour error.
- Machine parameter MP 7680 defines whether the postprocessor accounts for the center of sphere or the south pole of the sphere when calculating the tool length.

### Compensating other tool dimensions by entering delta values

In some cases you may want or have to use a tool with different dimensions than those originally entered for 3D compensation.

You can adjust these dimensions by entering delta values (oversize and undersize) in the tool table.

Delta values (DL for length, DR and DR2 for the radii) can be entered up to +/– 99.999 mm (3.9 in.).

- A positive delta value is an oversize, which means that the tool is larger than the original tool.
- A negative delta value is an undersize, which means that the tool is smaller than the original tool.

The TNC corrects the tool position by the delta values and the normal vector.

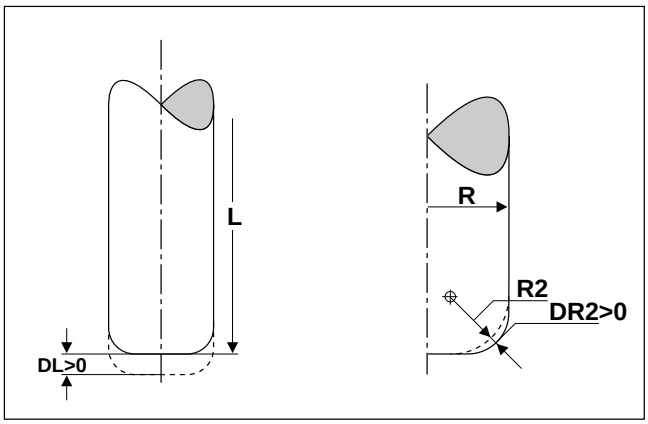


Fig. 4.18: Delta values for oversize and undersize



Downloaded from www.Manualslib.com manuals search engine

### NC Block

Example of an NC block with a surface-normal vector:

*LN X+31.737 Y+21.954 Z+33.165 NX+0.2637581....*
*.... NY+0.0078922 NZ–0.8764339 F1000 M3*

| | |
|---|---|
| LN | Straight line with 3D compensation |
| X, Y, Z | Compensated coordinates of the straight-line end points |
| NX, NY, NZ | Components of the surface-normal vector |
| F | Feed rate |
| M | Miscellaneous function |

The feed rate F and miscellaneous function M can be entered and changed in the PROGRAMMING AND EDITING mode of operation. The coordinates of the straight-line end point and the components of the surface-normal vector are calculated only by the CAD system.



Downloaded from www.Manualslib.com manuals search engine

# 4.6 Program Initiation

## Defining the blank form – BLK FORM

If you wish to use the TNC's graphic workpiece simulation you must first define a rectangular workpiece blank. Its sides lie parallel to the X, Y and Z axes and can be up to 30,000 mm long.

The dialog for blank form definition starts automatically at every program initiation. It can also be called with the BLK FORM soft key.

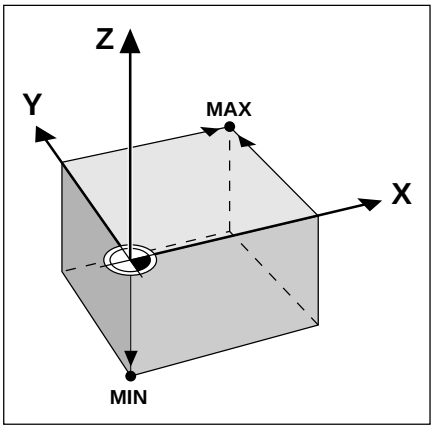


Fig. 4.19: MIN and MAX points define the blank form.

The ratio of the blank-form side lengths must be less than 200:1.

### MIN and MAX points

The blank form is defined by two of its corner points:

- The MIN point — the smallest X, Y and Z coordinates of the blank form, entered as absolute values.
- The MAX point — the largest X, Y and Z coordinates of the blank form, entered as absolute or incremental values.



Downloaded from www.Manualslib.com manuals search engine

## To create a new part program:

| | |
|---|---|
| PGM NAME | Select the file directory. |

Select any type .H file, for example OLD.H.

**FILE NAME = OLD .H**

| | |
|---|---|
| e.g. N E W ENT | Enter the name of the new file, for example NEW.H. |

**MM = ENT / INCH = NO ENT**

| | |
|---|---|
| ENT or NO ENT | Indicate whether the dimensions will be entered in millimeters or inches. |

**WORKING SPINDLE AXIS X / Y / Z ?**

| | |
|---|---|
| e.g. Z | Enter the working spindle axis, e.g. Z. |

**DEF BLK FORM: MIN-CORNER ?**

| | |
|---|---|
| e.g. 0 ENT<br>0 ENT<br>−/+ 4 0 ENT | Enter in sequence the X, Y and Z coordinates of the MIN point, e.g. X=0 mm, Y=0 mm, Z=-40 mm. |

**DEF BLK FORM: MAX-CORNER ?**

| | |
|---|---|
| e.g. 1 0 0 ENT<br>1 0 0 ENT<br>0 ENT | Enter in sequence the X, Y and Z coordinates of the MAX point, e.g. X=100 mm, Y=100 mm, Z=0 mm. |



Downloaded from www.Manualslib.com manuals search engine

The following blocks then appear on the TNC screen as program text:

```
0 BEGIN PGM NEW MM
```

Block 0: Program begin, name, unit of measure

```
1 BLK FORM 0.1 Z X+0 Y+0 Z-40
```

Block 1: Tool axis, MIN point coordinates

```
2 BLK FORM 0.2 X+100 Y+100 Z+0
```

Block 2: MAX point for coordinates

```
3 END PGM NEW MM
```

Block 3: Program end, name, unit of measure

Block numbers, as well and the BEGIN and END blocks are automatically generated by the TNC. The unit of measure used in the program appears behind the program name.



Downloaded from www.Manualslib.com manuals search engine

## 4.7 Entering Tool-Related Data

Besides the tool data and compensation, you must also enter the following information:

- Feed rate F
- Spindle speed S
- Miscellaneous function M

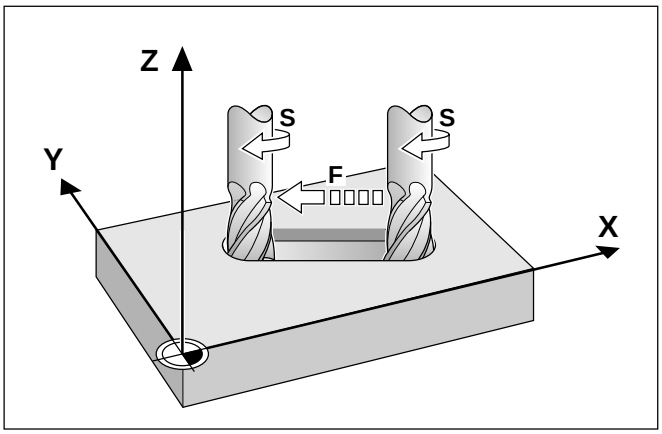


Fig. 4.20: Feed rate F and spindle speed S of the tool

### Feed rate F

The feed rate is the speed (in mm/min or inch/min) at which the tool center moves.

Input range:
F = 0 to 300,000 mm/min or 11,811 ipm.

The maximum feed rate is set individually for each axis in machine parameters.

**To set the feed rate:**

Answer the following dialog question in the positioning block:

| FEED RATE F = ? / F MAX = ENT | |
|---|---|
| e.g. 1 0 0 ENT | Enter the feed rate, for example F = 100 mm/min. |

The question does not always appear with F MAX.

**Rapid traverse**

If you wish to program rapid traverse, press ENT for FMAX. If you know the maximum traverse speed, you can also program it directly. FMAX is effective only for the block in which it is programmed.

**Duration of feed rate F**

A feed rate which is entered as a numerical value remains in effect until a block with another feed rate is reached.

If the new feed rate is FMAX, the feed rate returns to the previous feed rate after the block is executed.

**Changing the feed rate F**

You can vary the feed rate by turning the knob for feed rate override on the TNC keyboard (see page 2-6).



Downloaded from www.Manualslib.com manuals search engine

## Spindle speed S

You enter the spindle speed S in revolutions per minute (rpm) in the TOOL CALL block.

Input range:
S = 0 to 99 999 rpm

**To change the spindle speed S in the part program:**

| | |
|---|---|
| TOOL CALL | Press the TOOL CALL key. |
| **TOOL NUMBER ?** | |
| NO ENT | Ignore the request for the tool number. |
| **WORKING SPINDLE AXIS X/Y/Z ?** | |
| NO ENT | Ignore the request for the tool axis. |
| **SPINDLE SPEED S=?** | |
| e.g. 1 0 0 0 END | Enter the spindle speed S, for example 1000 rpm. |

*Resulting NC block: TOOL CALL S1000*

**To change the spindle speed S during program run:**

| | |
|---|---|
| 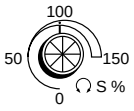 | You can vary the spindle speed S on machines with stepless lead-screw drives by turning the spindle speed override knob on the TNC keyboard. |



Downloaded from www.Manualslib.com manuals search engine

## 4.8 Entering Miscellaneous Functions and STOP

Some M functions are not effective on certain machines. The machine tool builder may also add some of his own M functions. See your machine tool manual.

The M functions (M for miscellaneous) affect:

- Program run
- Machine function
- Tool behavior

On the inside back cover of this manual you will find a list of M functions that are predetermined for the TNC. The list indicates whether an M function begins at the start, or at the end of the block in which it is programmed.

Answer the following requests in a positioning block:

.
.

| MISCELLANEOUS FUNCTION M? | |
|---|---|
| e.g. 3 ENT | Enter the miscellaneous function, for example M3 (spindle ON, clockwise rotation). |

.
.

**To enter an M function in a STOP block:**

| MISCELLANEOUS FUNCTION M? | |
|---|---|
| e.g. 5 ENT | Enter the miscellaneous function, for example M5 (spindle STOP). |

*Resulting NC block: STOP M5*

If the M function was programmed in a STOP block, program run will be interrupted at that block.

Some M functions are not effective on certain machines. The machine tool builder may also add some of his own M functions.

A program run or test run is interrupted when it reaches a block containing the STOP function.

An M function can be programmed in a STOP block.

If you wish to interrupt the program run or program test for a certain duration, use the cycle 9: DWELL TIME (see page 8-56).

**To enter a STOP function:**

STOP ▶ Press the STOP key.

| MISCELLANEOUS FUNCTION M ? | |
|---|---|
| e.g. 6 ENT | Enter an M function, if desired, for example M6 (tool change). |

*Resulting NC block: STOP M6*

Downloaded from www.Manualslib.com manuals search engine

## 4.9 Actual Position Capture

Sometimes you may want to enter the actual position of the tool in a particular axis as a coordinate in a part program. Instead of reading the actual position values and entering them with the number keys, you can simply press the "actual position capture" key. You can use this feature to

- enter a single coordinate into a highlighted block
- generate an L block if you have not marked a specific word with the highlight

The L block is inserted after the block that is active in the PROGRAMMING AND EDITING mode of operation. It only contains the coordinates that were selected with the MOD function (see page 11-10).

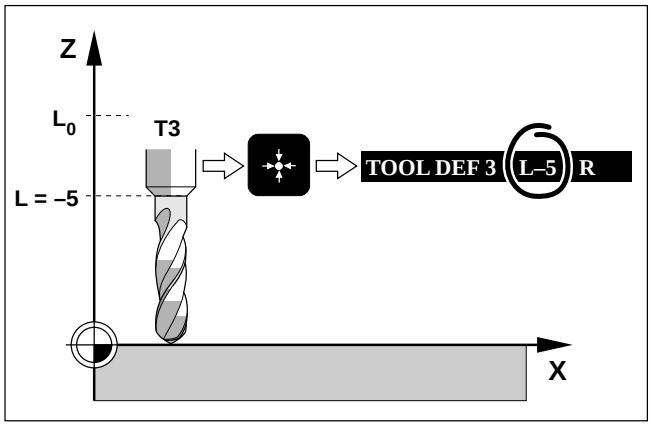


Fig. 4.21: Storing the actual position in the TNC

### To capture a single coordinate:

**MANUAL OPERATION**

Move the tool to the position that you wish to capture.

**PROGRAMMING AND EDITING**

Select or create the block in which you wish to enter the actual position of the tool.

**COORDINATES ?**

| | |
|---|---|
| e.g. X | Select the axis in which you wish to capture a coordinate, for example X. |
| | Transfer the actual position coordinate to the program. |

Enter the radius compensation according to the position of the tool relative to the workpiece.

### To generate a new L block with the actual position coordinates:

**MANUAL OPERATION**

Move the tool to the position that you wish to capture.

**PROGRAMMING AND EDITING**

Select the block after which the L block should be inserted.

| | |
|---|---|
| | The actual position coordinate is entered in a new L block. |



Downloaded from www.Manualslib.com manuals search engine

## 4.10 Marking Blocks for Optional Block Skip

You can mark program blocks so that the TNC will skip them during a program or test run whenever the block skip option is active (see page 3-10). The interactive graphics, however, ignores the marked blocks whether the block skip option is active or not.

**To mark blocks:**

Select the block that should not always be run.

| | |
|---|---|
| / | Mark the block with the "/" character on the alphabetic keyboard. |

- TOOL DEF blocks cannot be skipped.
- To skip a cycle, place the "/" character in the first cycle block

**To delete the "/" character:**

Select block from which "/" character is to be deleted.

| | |
|---|---|
| X | Delete the character. |



Downloaded from www.Manualslib.com manuals search engine

## 4.11 Text Files

You can use the TNC's text editor to write and edit texts.

Typical applications:

- Recording test results
- Documenting working procedures
- Keeping formulas and creating cutting data diagrams

The text editor can edit only type .A files (text files). If you wish to edit other types of files with the text editor you must convert them first (see page 1-36).

The typewriter-style keyboard provides letters, symbols and function keys that you need to create and change texts. The soft keys enable you to move around in the text and to find, delete, copy and insert letters, words, sections of text (text blocks), or entire files.

**To create a text file:**

PGM NAME

**PROGRAMMING AND EDITING**

SELECT TYPE + SHOW .A — Show text files (type .A files).

**FILE NAME = .A**

e.g. A B C ENT — Enter a file name, for example ABC, and confirm.

The following information is visible in the highlighted line at the top of the text window:

- FILE: Name of the current text file
- LINE: Line in which the cursor is presently located
- COLUMN: Column in which the cursor is presently located
- INSERT: Insert new text, pushing the old text aside
- OVERWRITE: Write over the existing text, erasing it where it is replaced with the new text.

You can toggle between the INSERT and OVERWRITE modes with the soft key at the far left. The selected mode is shown enclosed in a frame.

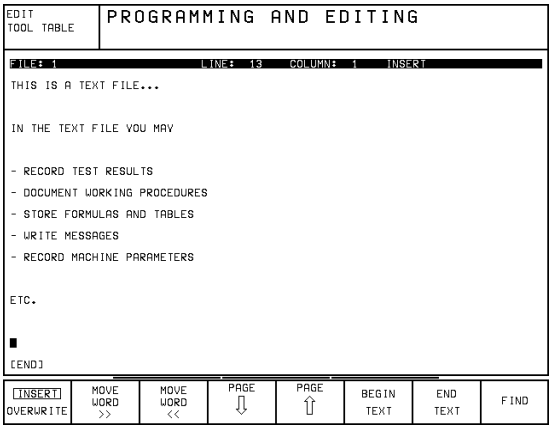


Fig. 4.22: Text editor screen

**To leave a text file:**

PGM NAME

SELECT TYPE + SHOW .H — Select another file type, such as a conversational program.

↑ ↓ + SELECT — Select the desired program.



Downloaded from www.Manualslib.com manuals search engine

### Entering text

The text that you type always appears on the screen where the cursor is located. You can move the cursor with the cursor keys and the following soft keys:

| Function | Soft key |
|---|---|
| • Move one word to the right | MOVE WORD >> |
| • Move one word to the left | MOVE WORD << |
| • Move to the next screen page | PAGE ⇩ |
| • Move to the previous screen page | PAGE ⇧ |
| • Move to beginning of file | BEGIN TEXT |
| • Move to end of file | END TEXT |

In each screen line you can enter up to 77 characters from the alphanumeric keyboard.

The keyboard offers the following function keys for editing text:

| Function | Key |
|---|---|
| • Begin a new line | RET |
| • Erase the character to the left of the cursor (backspace) | X |
| • Insert an empty space | SPACE |

**Exercise text:**

Write the following text in the file ABC.A. You will need it for the exercises in the next few pages.

***** JOBS *****
**!! IMPORTANT:**

**MACHINE THE CAMS (ASK THE BOSS?!)**
**PROGRAM 1375 .H; 80% OK**
**BY LUNCH**

**TOOLS**
**TOOL 1 DO NOT USE**
**TOOL 2 CHECK**
**REPLACEMENT TOOL: TOOL 3**

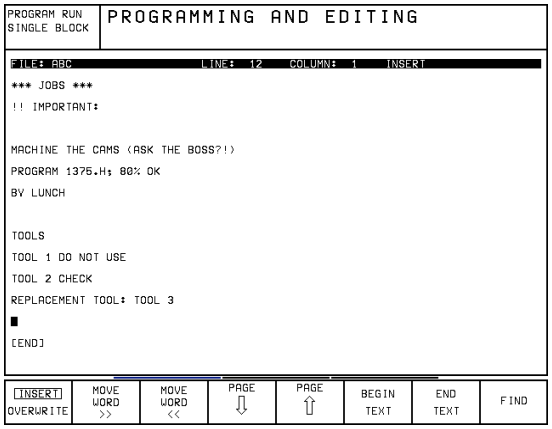


Fig. 4.23: Text editor screen with exercise text



Downloaded from www.Manualslib.com manuals search engine

## Finding text sections

You can search for a desired character or word with the FIND soft key at the far right of the first soft-key row:

### Finding the current word

You can search for the next occurrence of the word in which the cursor is presently located.

**Exercise: Find the word TOOL in the file ABC.A**

Move the cursor to the word TOOL.

| | |
|---|---|
| FIND | Select the search function. |

**FIND TEXT : TOOL**

| | |
|---|---|
| FIND CURRENT WORD | Find the word TOOL where it next appears in the text. |

**To find any text:**

| | |
|---|---|
| FIND | Select the search function. |

**FIND TEXT :**

Enter the text that you wish to find.

| | |
|---|---|
| EXECUTE | Find the text. |

**To leave the search function:**

| | |
|---|---|
| END | Terminate the search function. |



Downloaded from www.Manualslib.com manuals search engine

## To erase and insert characters, words and lines:

| | |
|---|---|
| ◁ or ▷ | Shift the soft-key row. |

| DELETE CHAR | DELETE WORD | DELETE LINE | RESTORE LINE/WORD | | | | |
|---|---|---|---|---|---|---|---|

Move the cursor to the text that you wish to erase, or to the place where you wish to insert text.

| Function | Soft key |
|---|---|
| • Delete a character | DELETE CHAR |
| • Delete and temporarily store a word | DELETE WORD |
| • Delete and temporarily store a line | DELETE LINE |
| • Insert a line/word from temporary storage | RESTORE LINE/WORD |

**Exercise: Delete the first line of ABC.A and insert it behind BY LUNCH**

| | |
|---|---|
| Move the cursor to any position in the line *** JOBS ***. | |
| ▷ | Shift the soft-key row. |
| DELETE LINE | Delete the line and store temporarily. |
| ↓ | Move the cursor to the beginning of the line behind BY LUNCH. |
| RESTORE LINE/WORD | Insert the line *** JOBS *** at the cursor position. |

Temporarily stored words and lines can be inserted as often as desired.



Downloaded from www.Manualslib.com manuals search engine

## Editing sections of text

With the editor, text sections (blocks) of any size can be

- selected
- deleted
- inserted at the same or other locations
- copied (even whole files)

| | |
|---|---|
| ◁ or ▷ | Shift the soft-key row. |

| Function | Soft key |
|---|---|
| • To select a block:<br>Place the cursor at one end of the block and press SELECT BLOCK. Then move the cursor to the other end. The selected block has a different color than the rest of the text. | SELECT BLOCK |
| • Delete the selected text and store temporarily | REMOVE BLOCK |
| • Insert the temporarily stored text at the cursor location | INSERT BLOCK |
| • Store marked block temporarily without erasing | REMOVE/ INSERT BLOCK |
| • Transfer the selected text to another file:<br>Write the name of the target file in the screen dialog line and press ENT. The TNC adds the selected text to the end of the specified file. You can also create a new file with the selected text in this way. | APPEND TO FILE |
| • Insert another file at the cursor position:<br>Write the name of the source file in the screen dialog line and press ENT. | READ FILE |



Downloaded from www.Manualslib.com manuals search engine

**Exercise:**

Move the last four lines in the file ABC.A to the beginning of the file, then copy them into a new file WZ.A.

- Move the text to the beginning of the file:

| | |
|---|---|
| Move the cursor to the "T" of TOOLS. | |
| SELECT BLOCK | Activate the selecting function. |
| ↓ repeatedly | Move the cursor to the end of the block. |
| REMOVE BLOCK | Erase the text and store temporarily. |
| ↑ repeatedly | Move the cursor to the beginning of the file. |
| INSERT BLOCK | Insert the stored text.<br>Note: The stored block is inserted above the cursor and may be off screen. |

- Select the text again and copy it into a new/another file:

| | |
|---|---|
| Mark the text block as described above. | |
| APPEND TO FILE | Select the function for copying to another file. |
| **DESTINATION FILE =** | |
| W Z | Write the name of the file into which you wish to copy the block, for example WZ. |
| ENT | Copy into a new/another file. Text block remains marked. |



Downloaded from www.Manualslib.com manuals search engine

## 4.12 Creating Pallet Files

Pallet files are used with machining centers and contain the following information:

- Pallet number PAL
- Part program name PGM-NAME
- Datum table DATUM

**To edit pallet files:**

**PROGRAMMING AND EDITING**

| | |
|---|---|
| PGM NAME | Call the file directory. |
| SELECT TYPE + SHOW .P | Shift the soft-key row and show the .P type pallet files. |

**FILE NAME = .P**

Select a pallet file or enter a new file name and create a new file.

**To link programs and datum tables:**

**PROGRAM NAME ?**

Enter the name of a part program that belongs to this pallet file.

**DATUM TABLE ?**

Enter the name of the datum table for the program.

| | |
|---|---|
| if necessary NEXT LINE | Create more pallet files. |

Pallet files are managed and output as determined in the PLC. See your machine tool handbook.



Downloaded from www.Manualslib.com manuals search engine

The following functions help you to create and change pallet tables:

| Function | Key/ Soft key |
|---|---|
| Move highlight vertically | ↑ ↓ |
| Move highlight horizontally | ← → |
| Go to beginning of table | BEGIN TABLE |
| Go to end of table | END TABLE |
| Go to next page of the table | PAGE ⇩ |
| Go to previous page of the table | PAGE ⇧ |
| Insert line at the end of the table | INSERT LINE |
| Delete the last line in the table | DELETE LINE |
| Go to the beginning of the next line | NEXT LINE |

**To leave a pallet file:**

PGM MGT ▶ SELECT TYPE | SHOW .H — Select another file type, such as a conversational program.

↑ ↓ + SELECT — Select the desired program.



Downloaded from www.Manualslib.com manuals search engine

## 4.13 Adding Comments to the Program

You can add comments to the part program in the PROGRAMMING AND EDITING mode of operation.

**Applications:**

- To explain steps of the program
- To make general notes

### Adding comments to program blocks

You can add comments to a program block immediately after entering the data by pressing the semicolon key ";" on the alphabetic keyboard.

Pressing the key brings the dialog prompt:

**COMMENT ?**

Input:

- Enter your comment and conclude the block by pressing the END key.
- If you decide not to comment after all, press the END or NO ENT key: this will conclude the block with the entered NC data.

If you wish to add a comment to a block that has already been entered, select the block and press a horizontal arrow key until the semicolon and the dialog prompt appear.

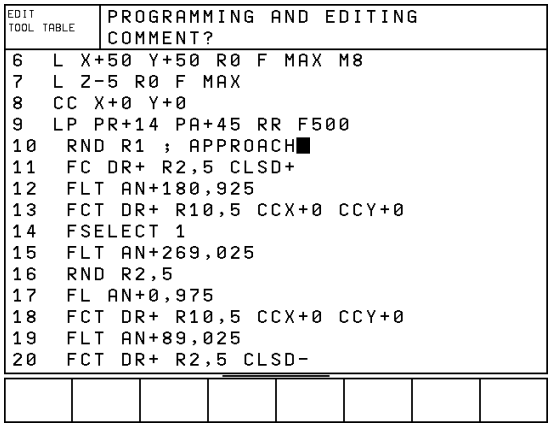


Fig. 4.24: Dialog for entering comments

**To enter a comment as a separate block:**

| | |
|---|---|
| ; | Start a new block by pressing the semicolon key. |
| Enter your comment on the alphanumeric keyboard. | |
| END | Close the block. |

Comments are added behind the entered blocks.

**Example**

```
.
.
.
70  L X+0 Y–10 FMAX
80  ; PRE-POSITIONING ..... A comment is indicated by a semicolon at the beginning of
90  L X+10 Y+0 RL F100      the block.
.
.
.
```



Downloaded from www.Manualslib.com manuals search engine

## 5.1 General Information on Programming Tool Movements

A tool movement is always programmed as if the tool moves and the workpiece remains stationary.

Before executing a part program, always pre-position the tool to prevent the possibility of damaging the tool or the workpiece.

**Path functions**

Each element of the workpiece contour is entered separately using path functions.
You enter:

- Straight lines
- Circular arcs

You can also program a combination of the two (helical paths).

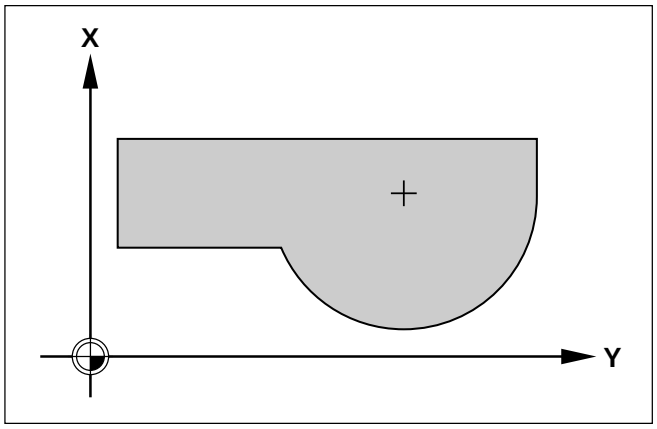


Fig. 5.1: A contour consists of straight lines and circular arcs

The contour elements are executed in sequence to machine the programmed contour.

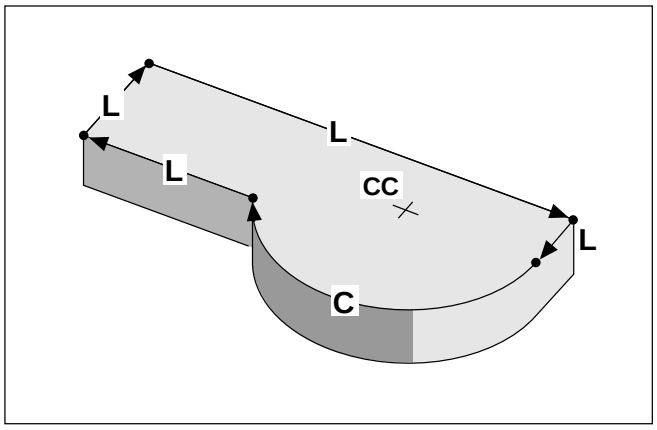


Fig. 5.2: Contour elements are programmed and executed in sequence

**Free contour (FK) programming**

With FK programming, you can create part programs easily in plain language dialog even if the drawing is not dimensioned according to NC standards.

FK programming also results in a contour consisting of circular arcs and straight line segments. The TNC uses the information you enter to calculate the missing dimensions.

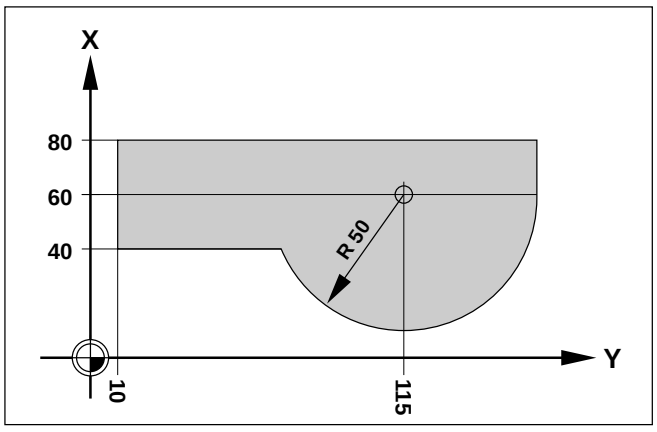


Fig. 5.3: This drawing is not dimensioned for conventional NC



Downloaded from www.Manualslib.com manuals search engine

### Subprograms and program section repeats

If a machining sequence repeats itself in a program, you can save time and reduce the chance of programming error by entering the sequence once and defining it as a subprogram or program section repeat.

Programming variants:

- To repeat a machining routine immediately after it is executed (program section repeat)
- To insert a machining routine at certain locations in a program (subprogram)
- To call and execute a separate program for program run or test run within the main program (main program as subprogram).

### Cycles

Common machining routines are delivered with the control as standard cycles. The TNC features fixed cycles for:

- Peck drilling
- Tapping
- Slot milling
- Pocket and island milling

Coordinate transformation cycles can be used to change the coordinates of a machining sequence in a defined way, i.e.:

- Datum shift
- Mirroring
- Rotation
- Enlarging and reducing

### Parametric Programming

Instead of numerical values you enter markers in the program, so-called parameters, which are defined through mathematical functions or logical comparisons. You can use parametric programming for:

- Conditional and unconditional jumps
- Measurements with the 3D touch probe during program run
- Output of values and measurements
- Transferring values to and from memory

The following mathematical functions are available:

- Assign
- Addition/Subtraction
- Multiplication/Division
- Angle measurement/Trigonometry

etc.



Downloaded from www.Manualslib.com manuals search engine

## 5.2 Contour Approach and Departure

The APPR and DEP functions simplify contour approach and departure.

You can select one of the following types of traverse:

- Straight line, perpendicular or tangential to the contour element
- Circular arc, tangential to the contour element
- Straight line with tangential arc during contour approach
- Circular arc with tangentially departing straight line

**Approaching and departing a helix**

An especially convenient way to approach and depart a helix is on a tangential arc. In this way the tool approaches and departs the helix on its extension.

### Positioning for contour approach and departure

The following points are important for contour approach and departure:

- Starting position $P_S$
  The starting position is programmed in the block before the contour approach block. It is programmed without radius compensation (R0) and lies outside the contour.
- Auxiliary point $P_H$
  Some of the paths for approach and departure go through an auxiliary point that the TNC automatically calculates from your input in the APPR or DEP block.
- First contour point $P_A$ and last contour point $P_E$
  The first contour point $P_A$ is programmed in the APPR block. The last contour point is programmed as usual. If all three coordinates X, Y and Z are programmed in the APPR block, the TNC will first move the tool to the working plane at $P_H$ and then move it to the entered depth in the tool axis. The first contour point can also be programmed in polar coordinates by pressing the orange P key after selecting the approach function.
- End position $P_N$
  The end position $P_N$ results from the data in the DEP block and lies outside of the contour.

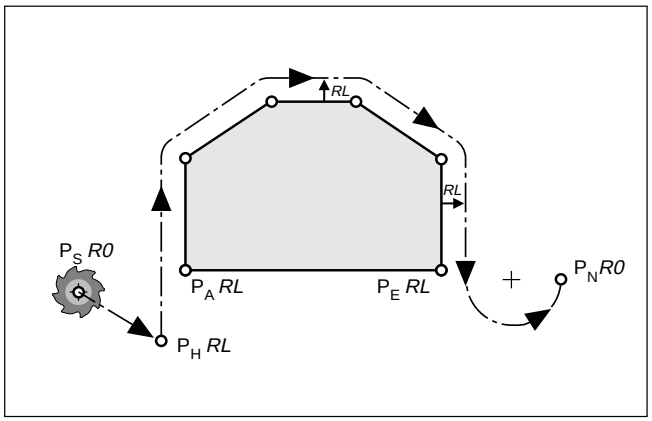


Fig. 5.4: Points that define contour approach and departure

- The control does not check whether the programmed contour will be damaged when moving from the actual position to auxiliary point $P_H$. Use the test graphics to check for danger of workpiece damage during approach or departure.
- The TNC moves the tool from the actual position to auxiliary point $P_H$ at rapid traverse (exception: LCT).
- When approaching the contour, allow sufficient distance between the starting point and the first contour point to assure that the TNC will reach the programmed feed rate for machining.



Downloaded from www.Manualslib.com manuals search engine

## Radius compensation

The tool radius compensation for machining is programmed in the APPR block.

### Approach block without radius compensation

If the APPR block is programmed with R0, the TNC calculates the tool path for a tool radius of 0 mm and a radius compensation RR! The radius compensation is necessary to set the direction of contour approach and departure in the APPR/DEP LN and APPR/DEP CT functions.

The blocks for departure automatically remove the tool radius compensation. There is no need to enter R0.

## Overview of input

The functions for contour approach and departure are activated with the light gray APPR/DEP key just above the path function key CR.

The path of tool movement is determined by soft key.

Position data can be entered as usual in absolute or incremental coordinates and in Cartesian or polar coordinates.

If the spindle axis is also entered in the APPR/DEP block, the TNC will move the tool using positioning logic. For example, it will leave the contour in the working plane first and then in the spindle axis.

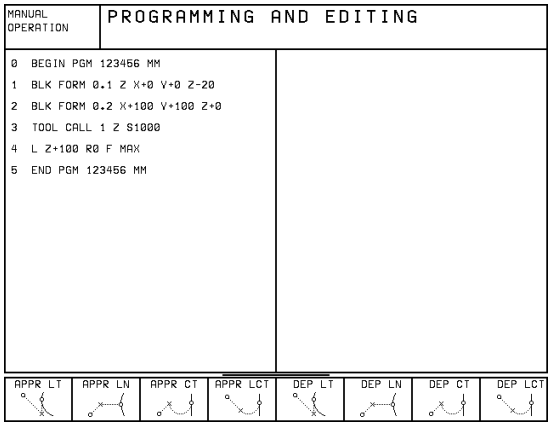


Fig. 5.5: Soft-key row with the functions for approach and departure

**Types of paths for approaching the first or departing the last contour point**

| Type of path | Approach | Departure |
|---|---|---|
| • Straight line with tangential connection | | |
| • Straight line perpendicular to the contour point | | 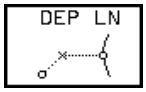  |
| • Circular arc with tangential connection | 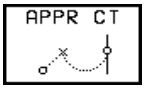  | 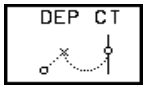  |
| • Circular path with tangential connection to the contour. Approach and departure to an auxiliary point outside of the contour on a tangentially connecting line. | 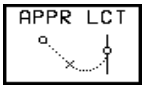  | 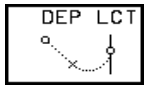  |

### Abbreviations

| | |
|---|---|
| APPR | Approach |
| DEP | Departure |
| L | Line |
| C | Circle |
| T | Tangential (smooth connection) |
| N | Normal (perpendicular) |



Downloaded from www.Manualslib.com manuals search engine

## Approaching the contour

### Approaching on a straight line with tangential connection: APPR LT

The tool moves on a straight line from the starting position $P_S$ to an auxiliary position $P_H$ located on the extension of the first contour element. It then moves from $P_H$ to the first contour point $P_A$. $P_H$ is separated from $P_A$ by the distance LEN.

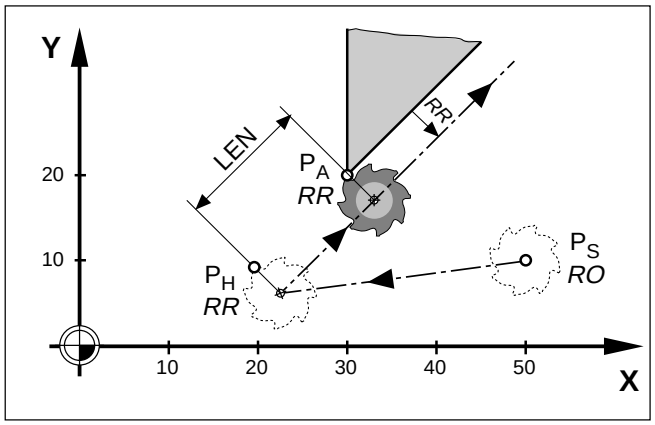


Fig. 5.6: Approaching on a straight line with tangential connection

#### Input

- Coordinates of the first contour point $P_A$
- Distance LEN from the auxiliary point $P_H$ to the first contour point $P_A$
- Tool radius compensation for machining

#### NC blocks

*L X+50 Y+10 R0 FMAX M3* ..... $P_S$ without radius compensation, rapid traverse, spindle ON with clockwise rotation

*APPR LT X+30 Y+20 Z–10 LEN 15 RR F100* ..... $P_A$ with radius compensation RR, machining feed rate, $P_H$ at distance LEN=15 mm from $P_A$

*L* ..... End point of the 1st contour element

### Approaching on a straight line vertical to the first contour point: APPR LN

The tool moves in a straight line from the starting position $P_S$ to an auxiliary point $P_H$. From $P_H$ it moves to $P_A$ following a path that is perpendicular to the first contour element. $P_H$ is separated from $P_A$ by the distance LEN.

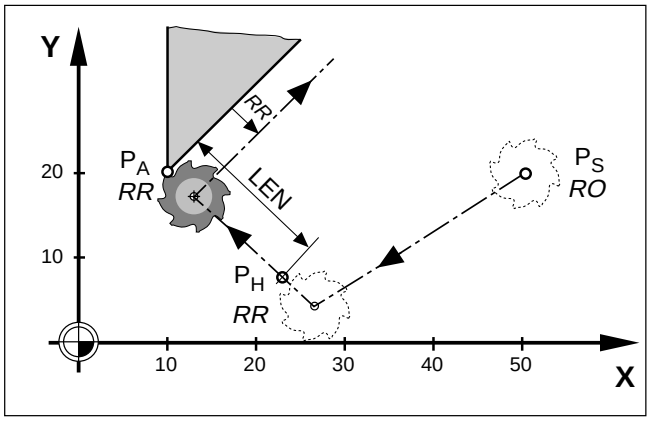


Fig. 5.7: Approaching on a straight line perpendicular to the first contour point

#### Input

- Coordinates of the first contour point $P_A$
- Distance LEN from the auxiliary point $P_H$ to the first contour point $P_A$
- Tool radius compensation for machining

#### Algebraic sign

Always enter LEN as a positive value.

#### NC blocks

*L X+50 Y+20 R0 FMAX M3* ..... $P_S$ without radius compensation, rapid traverse, spindle ON with clockwise rotation

*APPR LN X+10 Y+20 Z–10 LEN+20 RR F100* .... $P_A$ with radius compensation RR, machining feed rate, $P_H$ at distance LEN=20 mm from $P_A$

*L* ..... End point of the 1st contour element



Downloaded from www.Manualslib.com manuals search engine

### Approaching on a circular arc with tangential connection: APPR CT

The tool moves on a straight line from $P_S$ to an auxiliary point $P_H$. From $P_H$ it moves to the first contour point $P_A$ following a circular arc that is tangential to the first contour element.

The arc from $P_H$ to $P_A$ is determined through the radius R and the center angle CCA.

The direction of rotation of the circular path is automatically derived from the tool path for the first contour element.

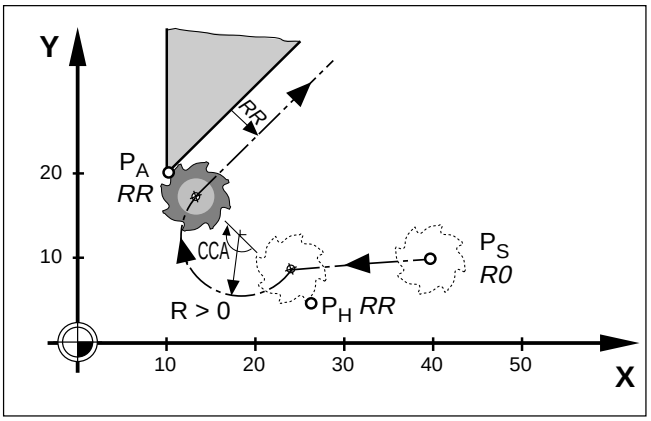


Fig. 5.8: Approaching on a circular arc with tangential connection

#### Input

- Coordinates of the first contour point $P_A$
- Radius R of the arc
- Center angle CCA of the arc (maximum input value 360°)
- Tool radius compensation for machining

#### Algebraic signs

- CCA can only be entered as a positive value
- R must always be entered as a positive value

#### NC blocks

*L X+40 Y+10 R0 FMAX M3* ..... $P_S$ without radius compensation, rapid traverse, spindle ON with clockwise rotation

*APPR CT X+10 Y+20 Z–10 CCA180 R+10 RR F100*..... $P_A$ with radius compensation RR, machining feed rate, radius R = +10 mm, center point angle CCA = 180°

*L* ..... End point of the 1st contour element



Downloaded from www.Manualslib.com manuals search engine

### Circular arc as tangential connection from a straight line to the first contour element: APPR LCT

The tool moves on a straight line from the starting position $P_S$ to an auxiliary point $P_H$. From $P_H$ it moves on an arc to the first contour point $P_A$.

The arc is connected tangentially both to the line from $P_S$ to $P_H$ as well as to the first contour element. Once these two lines are known, the tool radius compensation then suffices to completely define the tool path.

This type of tool path is similar to the corner rounding (RND) function described on page 5-30.

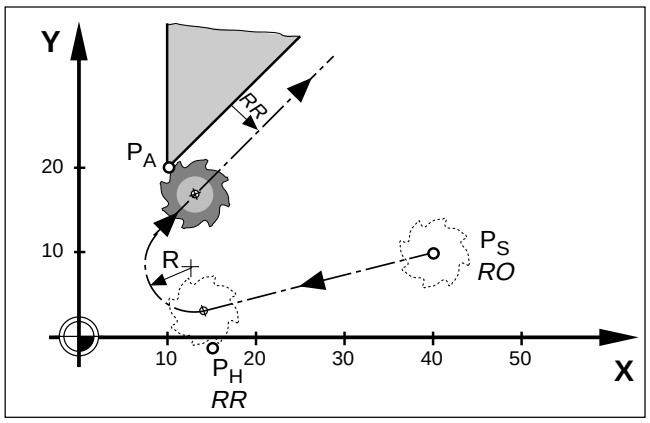


Fig. 5.9: Contour approach on a circular arc tangentially connecting a straight line and the workpiece contour

#### Input

- Coordinates of the first contour point $P_A$
- Radius R of the arc
- Tool radius compensation for machining

#### Algebraic sign for R

Always enter R as a positive value.

#### NC blocks

*L X+40 Y+10 R0 FMAX M3* ..... $P_S$ without radius compensation, rapid traverse, spindle ON with clockwise rotation

*APPR LCT X+10 Y+20 Z–10 R10 RR F100* ..... $P_A$ with radius compensation RR, machining feed rate, Radius R = 10 mm

*L* ..... End point of the first contour element



Downloaded from www.Manualslib.com manuals search engine

## Departing the contour

### Departing tangentially on a straight line: DEP LT

The tool moves on a straight line from the last contour point $P_E$ to the end position $P_N$. The line lies in the extension of the last contour element. $P_N$ is separated from $P_E$ by the distance LEN.

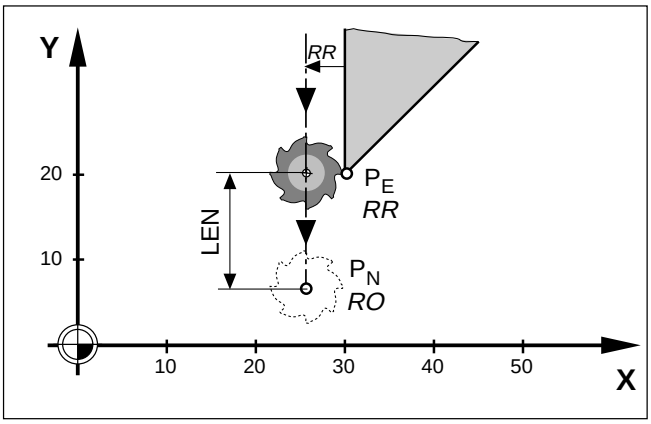


Fig. 5.10: Contour departure on a tangentially connected straight line

#### Input

- The distance LEN from the last contour point $P_E$ to the end position $P_N$

#### NC blocks

*LY+20 RR F100* ..... $P_E$ with radius compensation, machining feed rate
*DEP LT LEN 12.5 F100* ..... Depart contour by LEN=12.5 mm
*LZ+100 FMAX M2* ..... Retract in Z, return to block 1, end program

### Departing on a straight line perpendicular to the last contour point: DEP LN

The tool moves on a straight line from the last contour point $P_E$ to the end position $P_N$. The straight line departs on a path that is perpendicular to the last contour element. $P_N$ is separated from $P_E$ by the distance LEN + tool radius.

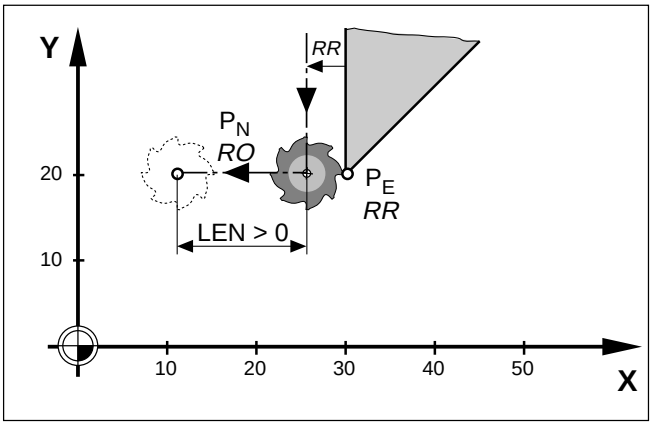


Fig. 5.11: Contour departure on a straight line perpendicular to the last contour point

#### Input

- The distance LEN

#### Algebraic sign

Always enter LEN as a positive value.

#### NC blocks

*LY+20 RR F100* ..... $P_E$ with radius compensation, feed rate for machining
*DEP LN LEN+20 F100* ..... Depart on the radius compensation side by LEN = 20 mm
*L Z+100 FMAX M2* ..... Retract in Z, return to block 1, end program



Downloaded from www.Manualslib.com manuals search engine

### Departing tangentially on a circular arc: DEP CT

The tool moves on a circular arc from the last contour point $P_E$ to the end position $P_N$. The arc is tangentially connected to the last contour element.

#### Input

- Radius R of the circular arc
- Center angle CCA of the arc (maximum input value 360°)

#### Algebraic sign for R

Always enter R as a positive value.

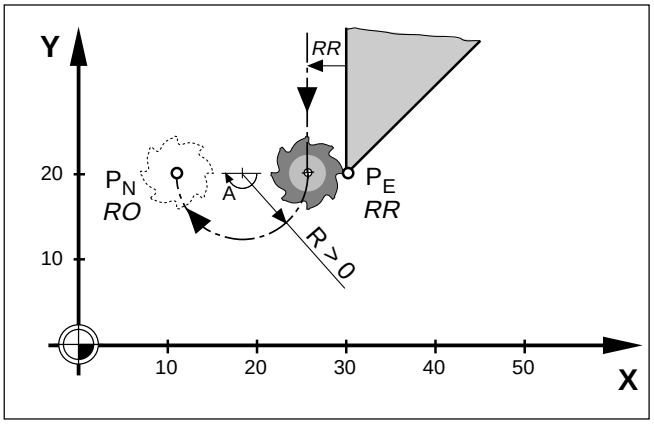


Fig. 5.12: Contour departure on a tangentially connected circular arc

#### NC blocks

*LY+20 RR F100* ..... $P_E$ with radius compensation, feed rate for machining
*DEP CT CCA180 R+10 F100* ..... Center angle CCA = 180°, radius R = 10 mm
*L Z+100 FMAX M2* ..... Retract in Z, return to block 1, end program

### Departing on a circular arc tangentially connecting the contour and a straight line: DEP LCT

The tool moves on a circular arc from the last contour point $P_E$ to an auxiliary point $P_H$. It then moves on a straight line from $P_H$ to the end position $P_N$.

The arc is tangentially connected both to the last contour element and to the line from $P_H$ to $P_N$. Once these two lines are known, the radius R then suffices to completely define the tool path.

This type of tool path is similar to the corner rounding (RND) function described on page 5-30.

#### Input

- Coordinates of the end position $P_N$
- Radius R of the arc

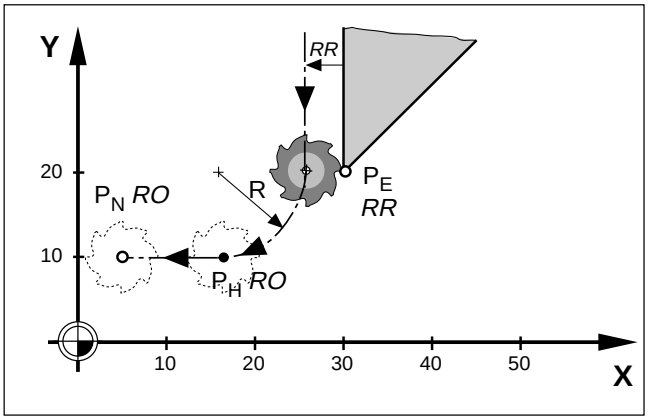


Fig. 5.13: Departing on a circular arc tangentially connecting the contour with a subsequent straight line

#### NC blocks

*LY+20 RR F100* ..... $P_E$ , with radius compensation, feed rate for machining
*DEP LCT X+5 Y+10 R10 F100* ..... $P_N$ , radius R = 10 mm
*L Z+100 FMAX* ..... Retract in Z, return to block 1, end program



Downloaded from www.Manualslib.com manuals search engine

## 5.3 Path Functions

### General information

**Part program input**

You create a part program essentially by entering the given workpiece dimensions as coordinates. These coordinates can be programmed as absolute or as relative values.

The resulting blocks normally contain the coordinates of the end points of the contour elements.

The TNC automatically calculates the path of the tool from the tool data and the radius compensation.

### Machine axis movement under program control

All axes programmed in a single block are moved simultaneously.

**Paraxial movement**

The tool path is parallel to the programmed axis.

Number of axes programmed in the NC block: 1

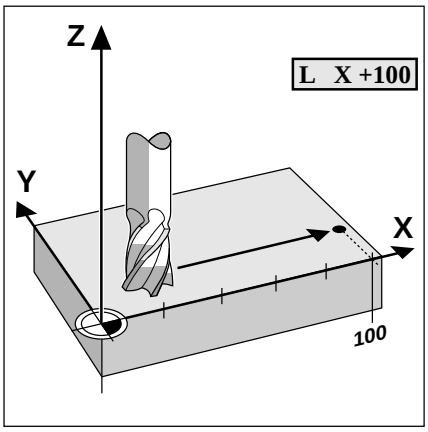


Fig. 5.14: Paraxial movement

**Movement in the main planes**

The tool moves to the programmed position on a straight line or circular arc in a plane.

Number of axes programmed in the NC block: 2

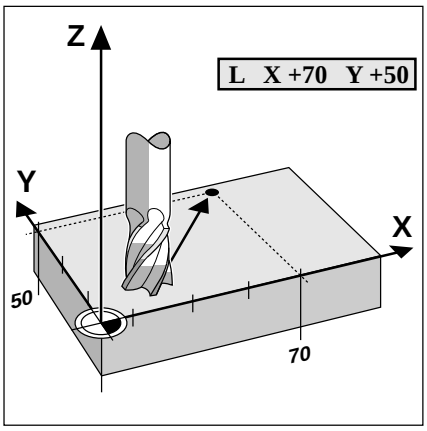


Fig. 5.15: Movement in a main plane (X/Y plane)



Downloaded from www.Manualslib.com manuals search engine

**Movement of three machine axes (3D movement)**

The tool moves in a straight line to the programmed position.

Number of axes programmed in the NC block: 3

Exception: A helical path is created by combining a circular movement in a plane with a linear movement perpendicular to the plane.

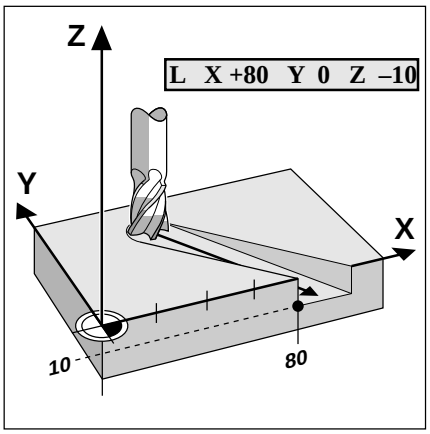


Fig. 5.16: Three dimensional movement

**Entering more than three coordinates (not on TNC 407)**

The TNC controls up to 5 axes simultaneously. Five-axis machining can include movement in 3 linear and 2 rotary axes, for example.

Such programs are too complex to program at the machine.

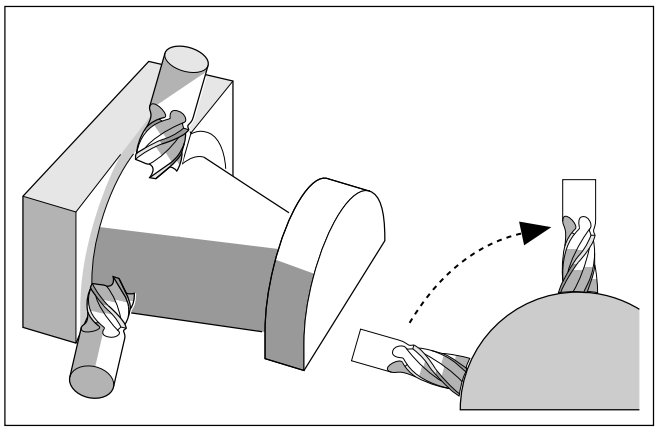

Fig. 5.17: Example of simultaneous movement of more than three axes: machining a 3D surface with an end mill

Advantages of five-axis machining of 3D surfaces:

- The part can be machined with cylindrical end mills (inclined-tool milling).
- Faster machining
- Better surface definition

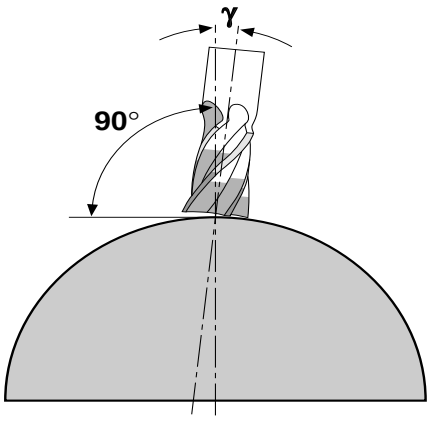


Fig. 5.18: Inclined-tool machining

Input example:

L X+20 Y+10 Z+2 A+15 C+6 R0 F100 M3
(3 linear and 2 rotary axes)
The additional coordinates are programmed as usual in an L block.

The TNC graphics do not simulate four- or five-axis movements.



Downloaded from www.Manualslib.com manuals search engine

## Overview of path functions

The path function keys determine the type of contour element and initiate the plain language dialog.

| Function | Key | Tool movement |
|---|---|---|
| **L**ine | | Straight line |
| **CH**am**F**er | | Chamfer between two straight lines |
| **C**ircle **C**enter | | Coordinates of a circle center or pole |
| **C**ircle | | Circular arc around a circle center CC to an arc end point |
| **C**ircle by **R**adius | | Circular arc with a certain radius |
| **C**ircle, **T**angential | | Circular arc with a tangential connection to the previous contour element |
| Corner **R**ou**ND**ing | | Circular arc with tangential connection to the previous and subsequent contour elements |



Downloaded from www.Manualslib.com manuals search engine

## 5.4 Path Contours – Cartesian Coordinates

### Straight line L

To program a straight line you enter:

- The coordinates of the end point Ⓔ
- If necessary, radius compensation, feed rate, miscellaneous function

The tool moves in a straight line from its current (starting) position to the end point Ⓔ. The starting position Ⓢ was programmed in the previous block.

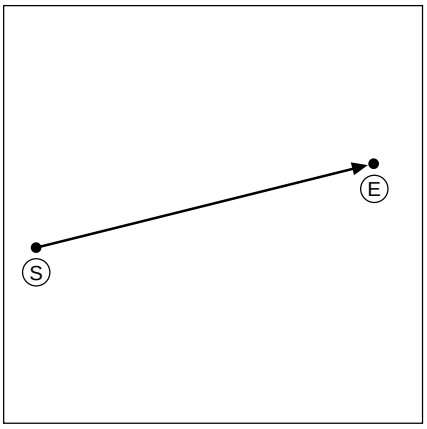


Fig. 5.19: A linear movement

**To program a straight line**

| COORDINATES ? | |
|---|---|
| If necessary [I] | Identify coordinates as relative, for example IX=50 mm. |
| e.g. [X] | Select the axis (orange axis-selection key), for example X. |
| e.g. [5] [0] | Enter the coordinates of the end point. |
| if necessary [-/+] | If a coordinate is negative, press the -/+ key once, for example IX=–50 mm. |
| e.g. [Y] ... e.g. [Z] | Enter all further coordinates of the end point. |
| [ENT] | After entering all coordinates, close the dialog with the ENT key. |



Downloaded from www.Manualslib.com manuals search engine

.
.
.

| TOOL RADIUS COMP. RL / RR / NO COMP.? | |
|---|---|
| RL | The TNC must move the tool to the left of the programmed contour to compensate its radius. |
| RR | The TNC must move the tool to the right of the programmed contour to compensate its radius. |
| ENT | The TNC moves the tool center directly to the end point. |

| FEED RATE = ? / F MAX = ENT | |
|---|---|
| e.g. 1 0 0 ENT | Enter the feed rate of the tool on the straight line, for example 100 mm/min. |
| ENT | Enter rapid tool traverse, F = FMAX. |

| MISCELLANEOUS FUNCTION M ? | |
|---|---|
| e.g. 3 ENT | Enter a miscellaneous function, if appropriate, for example M3 (Spindle ON, clockwise rotation). |

*Resulting NC block: L IX–50 Y+10 Z–20 RR F100 M3*



Downloaded from www.Manualslib.com manuals search engine

**Example for exercise: Milling a rectangle**

Coordinates of the corner points:

| | | |
|---|---|---|
| ① | X = 5 mm | Y = 5 mm |
| ② | X = 5 mm | Y = 95 mm |
| ③ | X = 95 mm | Y = 95 mm |
| ④ | X = 95 mm | Y = 5 mm |

Milling depth: Z =–10 mm

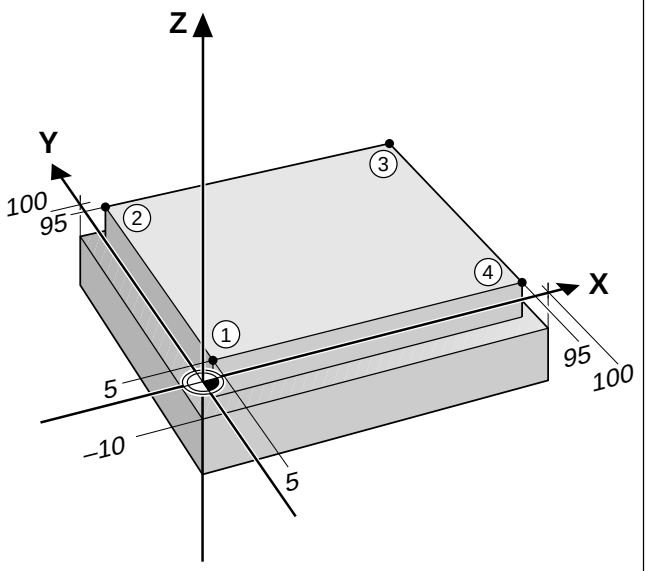


**Part program**

```
0  BEGIN PGM RECTANG MM ..... Begin program; program name RECTANG; dimensions in millimeters
1  BLK FORM 0.1 Z X+0 Y+0 Z-20
2  BLK FORM 0.2 X+100 Y+100 Z+0 ..... Define blank form for graphic workpiece simulation (MIN and MAX points)
3  TOOL DEF 1 L+0 R+5
4  TOOL CALL 1 Z S1000 ..... Define tool in the program; call tool in the spindle axis Z; spindle speed S = 1000 rpm
5  L Z+100 R0 FMAX M6 ..... Retract in the spindle axis; rapid traverse; insert tool
6  APPR LT X+5 Y+5 Z–10 LEN20 RL F100 M3 ..... Approach contour on a straight line with tangential connection
7  L Y+95 ..... Move to second contour point - corner point ②. All values not programmed remain the same as in block 8
8  L X+95 ..... Move to third contour point - corner point ③
9  L Y+5 ..... Move to fourth contour point, corner point ④
10 L X+5 Y+5 ..... Conclude milling: Return to first contour point
11 DEP LN LEN+20 F100 ..... Depart contour on a straight line perpendicular to the last contour element
12 L Z+100 FMAX M2 ..... Move tool to setup clearance; rapid traverse; spindle OFF, coolant OFF, program run STOP, return to block 1 of the program
13 END PGM RECTANG MM ..... End of program
```



Downloaded from www.Manualslib.com manuals search engine

## Chamfer CHF

The chamfer function enables you to cut off corners at the intersection of two straight lines

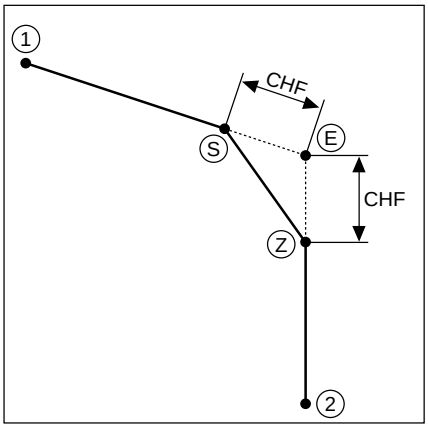


Fig. 5.20: Chamfer from Ⓢ to Ⓩ

Enter the length (CHF) to be removed from each side of the corner.

**Prerequisites:**

- The blocks before and after the CHF block must be in the same working plane.
- The radius compensation before and after the CHF block must be the same.
- An inside chamfer must be large enough to accommodate the current tool.

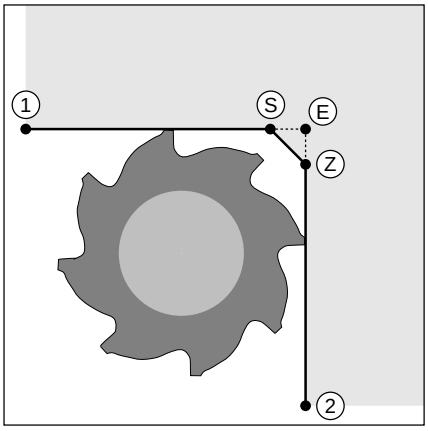


Fig. 5.21: Tool radius too large

- You cannot start a contour with a CHF block.
- A chamfer is only possible in the working plane.
- The feed rate for chamfering is taken from the previous block.
- The corner point E is cut off by the chamfer and is not part of the contour.

**To program a chamfer:**

| | |
|---|---|
| CHF | Select "chamfer." |

| CHAMFER SIDE LENGTH ? | |
|---|---|
| e.g. 5 ENT | Enter the length to be removed from each side of the corner, for example 5 mm. |

*Resulting NC block: CHF 5*



Downloaded from www.Manualslib.com manuals search engine

**Example for exercise: Chamfering a corner**

Coordinates of the corner point: Ⓔ
X = 95 mm
Y = 5 mm

Length of chamfer: CHF = 10 mm

Milling depth: Z = – 15 mm

Tool radius: R = +10 mm

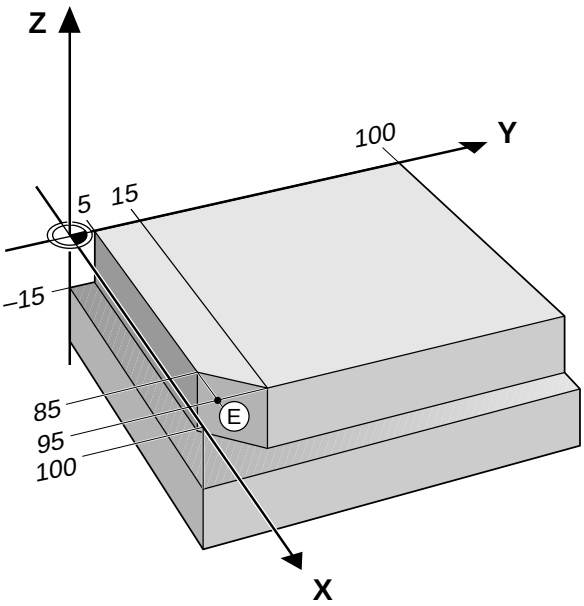


**Part program**

| | | |
|---|---|---|
| 0 | BEGIN PGM CHAMFER MM | Begin program |
| 1 | BLK FORM 0.1 Z X+0 Y+0 Z-20 | Workpiece blank MIN point |
| 2 | BLK FORM X+100 Y+100 Z+0 | Workpiece blank MAX point |
| 3 | TOOL DEF 5 L+5 R+10 | Define tool |
| 4 | TOOL CALL 5 Z S500 | Call tool |
| 5 | L Z+100 R0 FMAX M6 | Retract spindle and insert tool 5 |
| 6 | APPR LN X+0 Y+5 Z–15 LEN+20 RR F100 M3 | Approach contour on a straight line that is perpendicular to the first contour element |
| 7 | L X+95 | Program the first side of corner Ⓔ |
| 8 | CHF 10 | Insert a chamfer, side length = 10 mm |
| 9 | L Y+100 | Program the second straight line for corner Ⓔ |
| 10 | DEP LN LEN+20 F100 | Depart the contour on a straight line that is perpendicular to the last contour element. |
| 11 | L Z +100 F MAX M2 | |
| 12 | END PGM CHAMFER MM | End of program |



Downloaded from www.Manualslib.com manuals search engine

## Circles and circular arcs

The TNC moves two machines axes simultaneously in a circular path relative to the workpiece. This is also possible in secondary axes U, V, and W.

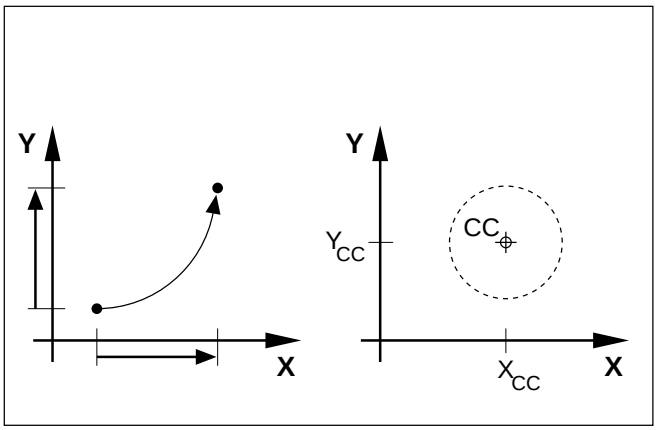


Fig. 5.22: Circular arc and circle center

### Circle Center CC

You can define a circle by entering its center CC.

A circle center also serves as reference (pole) for polar coordinates.

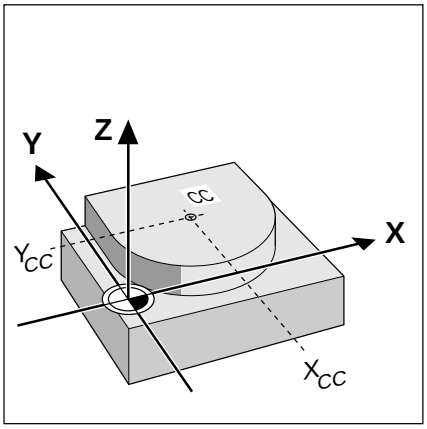


Fig. 5.23: Circle center coordinates

### Direction of Rotation DR

When there is no tangential transition to another contour element, enter the mathematical direction of rotation DR:

- A clockwise direction of rotation is mathematically negative: DR-
- A counterclockwise direction of rotation is mathematically positive: DR+

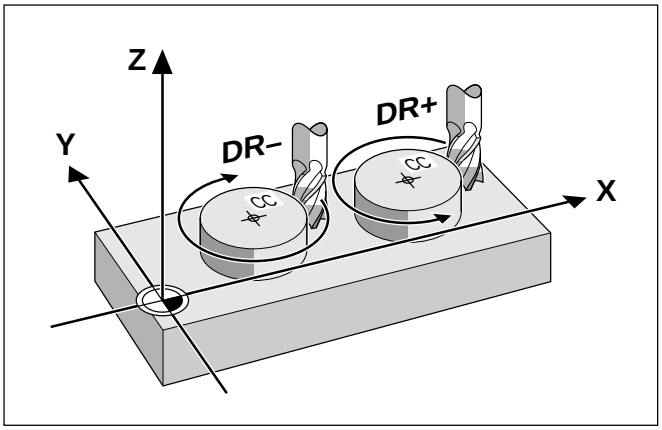


Fig. 5.24: Direction of rotation for circular movements



Downloaded from www.Manualslib.com manuals search engine

### Radius compensation in circular paths

You cannot begin a radius compensation in a circle block. It must be activated beforehand in a line block (L block) or in the APPR block.

### Circles in the main planes

When you program a circle, the TNC assigns it to one of the main planes. This plane is automatically defined when you set the spindle axis during TOOL CALL.

| Spindle axis | Main plane |
|---|---|
| Z | XY (UV, XV, UY) |
| Y | ZX (WU, ZU, WX) |
| X | YZ (VW, YW, VZ) |

Fig. 5.25: Defining the spindle axis also defines the main plane

You can program circles that do not lie parallel to a main plane by using Q parameters. (see Chapter 7) or the TNC function for tilting the working plane (see page 8-55).

## Circle Center CC

If you program an arc using the C path function key, you must first define the circle center CC by:

- entering the Cartesian coordinates of the circle center
- using the circle center defined in an earlier block
- capturing the actual position

You can define the last programmed position as circle center by entering an empty CC block.

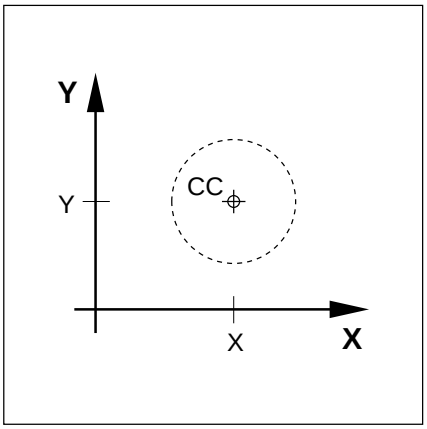


Fig. 5.26: Circle center CC

### Validity of a circle center definition

A circle center definition remains effective until a new circle center is defined. The circle center can also be entered for the secondary axes U, V, and W.



Downloaded from www.Manualslib.com manuals search engine

### Entering the CC as a relative value

If you enter the circle center with relative coordinates, you have defined it in terms of the last programmed position.

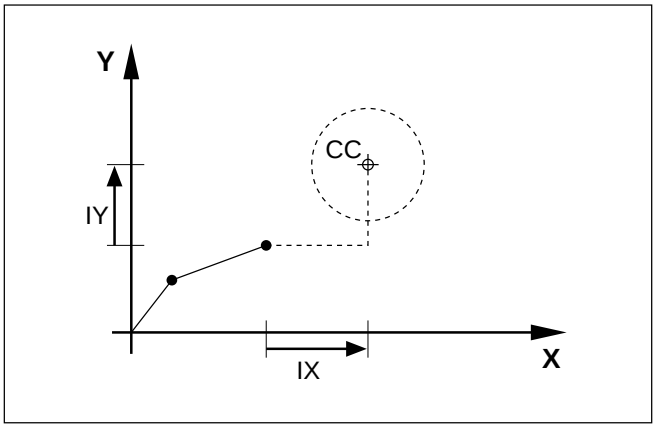


Fig. 5.27: Incremental coordinates for a circle center

- The circle center CC also serves as pole for polar coordinates.
- CC defines a position as a circle center. The resulting contour is located on the circle, not on the circle center.

**To program a circle center (pole):**

| CC ▶ | COORDINATES ? |
|---|---|
| e.g. X | Select the coordinate axis, for example X. |
| e.g. 2 0 ENT | Enter the coordinate for the circle center in this axis, for example X=20 mm. |
| e.g. Y | Select the second coordinate axis, for example Y. |
| e.g. 1 0 −/+ ENT | Enter the coordinate of the circle center, for example Y=-10 mm. |

*Resulting NC block: CC X+20 Y-10*



Downloaded from www.Manualslib.com manuals search engine

## Circular path C around the circle center CC

### Prerequisites

The circle center CC must have been previously defined in the program.
The tool is located at the circle starting position Ⓢ.

### Input

- Arc end point
- Direction of rotation DR

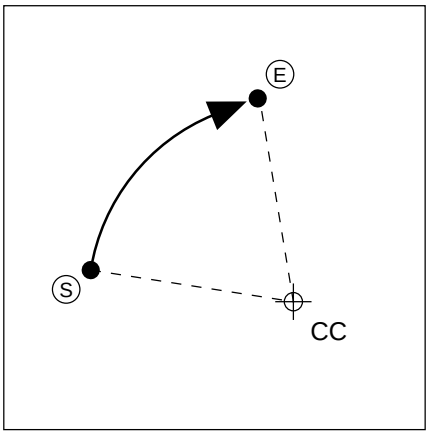


Fig. 5.28: Circular path from Ⓢ to Ⓔ around CC

The starting and end points of the arc must lie on the circle.
Input tolerance: up to 0.016 mm (selectable with MP 7431).

- To program a full circle, enter the same point for the end point as for the start point in a C block.

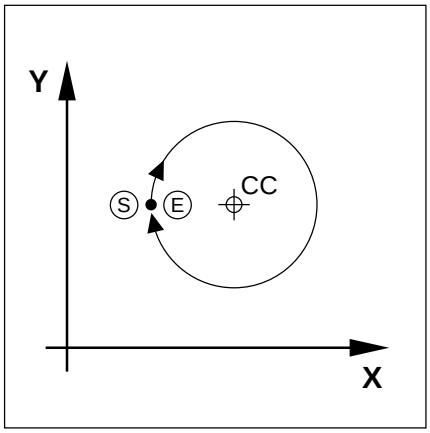


Fig. 5.29: Full circle around CC with a C block

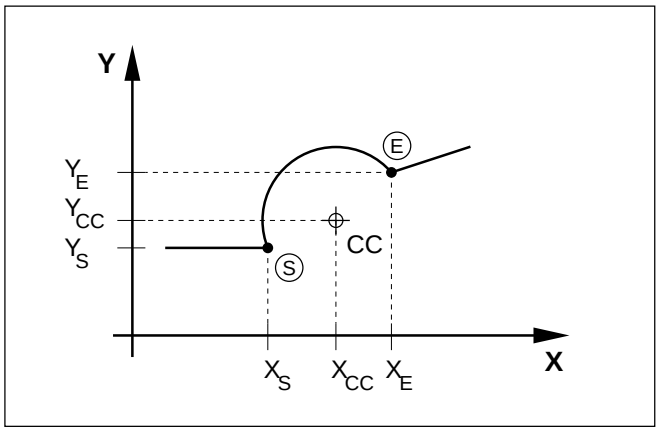


Fig. 5.30: Coordinates of a circular arc



Downloaded from www.Manualslib.com manuals search engine

**To program a circular arc C around a circle center CC:**

| | |
|---|---|
| **COORDINATES ?** | |
| e.g. I X 5 | Enter the first coordinate of the arc end point, for example IX = 5 mm. |
| e.g. Y −/+ 5 | Enter the second coordinate of the arc end point, for example Y = –5 mm. |
| ENT | Terminate coordinate entry. |
| **ROTATION CLOCKWISE: DR- ?** | |
| 1 x −/+ or 2 x −/+ | Select negative (DR–) or positive direction of rotation (DR+). |
| ENT | |

If necessary, enter also:

- Radius compensation
- Feed rate
- Miscellaneous function

*Resulting NC block: C IX+5 Y-5 DR–*



Downloaded from www.Manualslib.com manuals search engine

**Example for exercise: Milling a full circle in one block**

| | | | | |
|---|---|---|---|---|
| Circle center CC: | X | = | 50 | mm |
| | Y | = | 50 | mm |
| Beginning and end of the circular arc C: | X | = | 50 | mm |
| | Y | = | 0 | mm |
| Milling depth: | Z | = | –5 | mm |
| Tool radius: | R | = | 15 | mm |

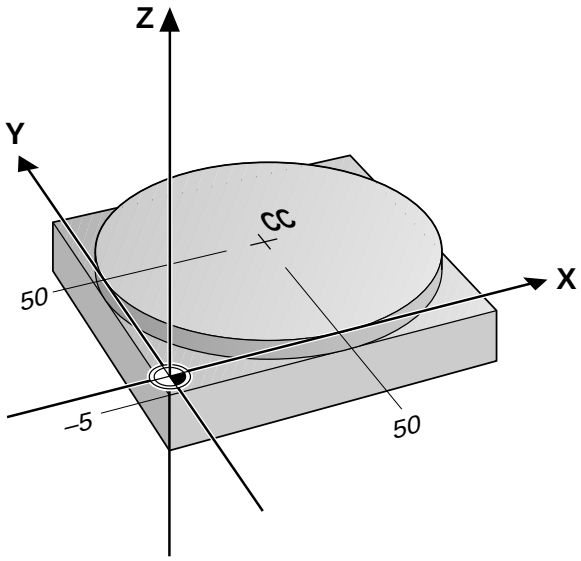


**Part program**

```
0  BEGIN CIRCLE MM ..... Begin program
1  BLK FORM 0.1 Z X+0 Y+0 Z-20 ..... Define workpiece blank
2  BLK FORM 0.2 X+100 Y+100 Z+0
3  TOOL DEF 6 L+0 R+15 ..... Define tool
4  TOOL CALL 6 Z S500 ..... Call tool
5  CC X+50 Y+50 ..... Coordinates of the circle center CC
6  L Z+100 R0 FMAX M6 ..... Change tool
7  APPR CT X+50 Y+0 Z–5 CCA90 R+20 RR F100 M3 .... Approach contour on a tangential arc
8  C X+50 Y+0 DR+ ..... Mill circular arc C around circle center CC; End point coor-
                        dinates X=+50 mm and Y=0; positive direction of rotation
9  DEP CT CCA180 R+30 F100 ..... Depart contour on a tangential arc
10 L Z +100 F MAX M2 ..... Retract tool and end program
11 END PGM CIRCLE MM ..... End of program
```



Downloaded from www.Manualslib.com manuals search engine

## Circular path CR with defined radius

The tool moves on a circular path with the radius R.

**Input**

- Coordinates of the arc end point
- Arc radius R
- Direction of rotation DR

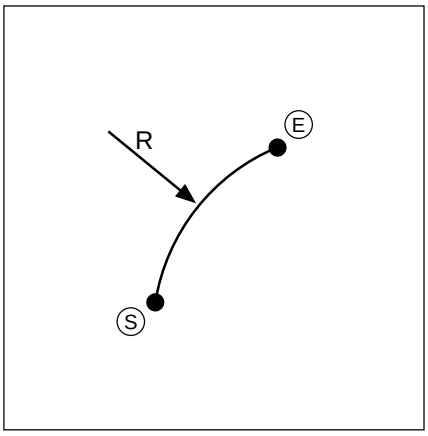


Fig. 5.31: Circular path from Ⓢ to Ⓔ with radius R

- To program a full circle with CR you must enter two successive CR-blocks.
- The distance from the starting point to the end point cannot be larger than the diameter of the circle.
- The maximum permissible radius is 99.999 m.
- You can also enter rotary axes (A, B, C).

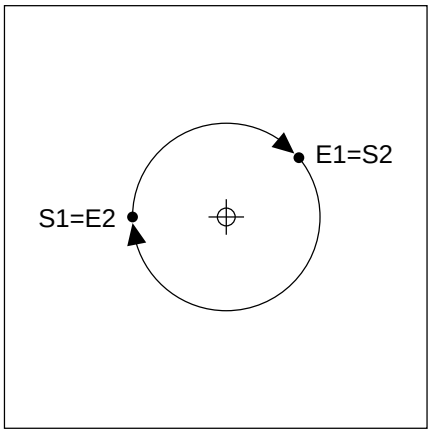


Fig. 5.32: Full circle with two CR blocks

**Central angle CCA and arc radius R**

Starting point Ⓢ and end point Ⓔ can be connected by four different arcs with the same radius. The arcs differ in their curvatures and lengths.

To program an arc **larger than a semicircle** (CCA>180°), enter the radius R with a **negative** sign (R<0).

To program an arc **smaller than a semicircle** (CCA<180°) enter the radius R with a **positive** sign (R>0).

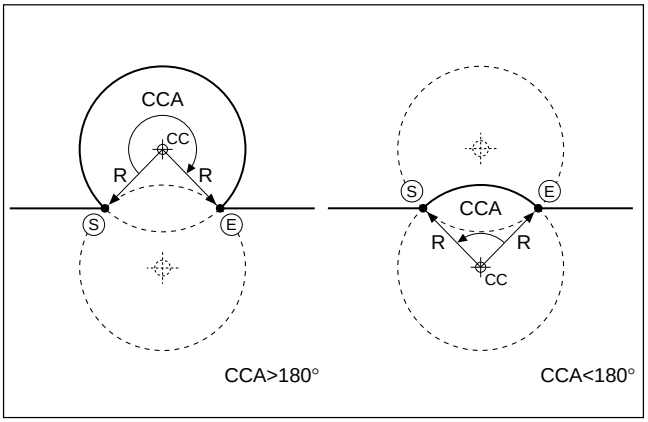


Fig. 5.33: Circular arcs with central angles greater than and less than 180°



Downloaded from www.Manualslib.com manuals search engine

**Direction of rotation DR and arc shape**

The direction of rotation determines whether the arc is

- convex (curved outwards) or

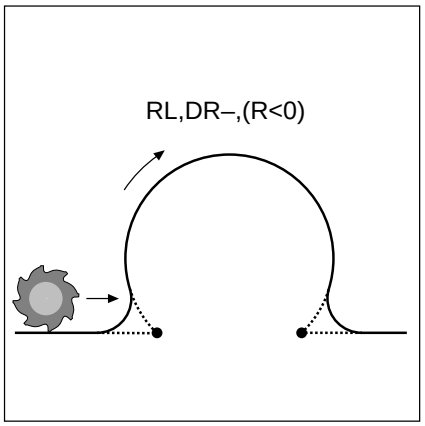


Fig. 5.34: Convex path

- concave (curved inwards)

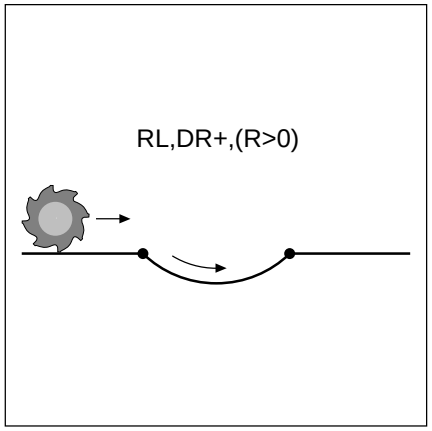


Fig. 5.35: Concave path

**To program a circular arc with defined radius:**

| | |
|---|---|
| **COORDINATES ?** | |
| e.g. X 1 0 Y 2 ENT | Enter the coordinates of the arc end point, for example X=10 mm, Y=2 mm. |
| **CIRCLE RADIUS (SIGN) ?** | |
| e.g. 5 –/+ ENT | Enter the arc radius, for example R=5 mm; and determine the size of the arc using the sign, here the negative sign. |
| **ROTATION CLOCKWISE: DR-?** | |
| 1x –/+ or 2x –/+ ENT | Define circular arc with negative (DR–) or positive direction of rotation (DR+). |

If necessary, enter also:

- Radius compensation
- Feed rate
- Miscellaneous function

*Resulting NC block: CR X+10 Y+2 R-5 DR– RL*



Downloaded from www.Manualslib.com manuals search engine

**Example for exercise: Milling a concave semicircle**

| | |
|---|---|
| Semicircle radius: | R = 50 mm |
| Coordinates of the arc starting point: | X = 0<br>Y = 0 |
| Coordinates of the arc end point: | X = 100 mm<br>Y = 0 |
| Tool radius: | R = 25 mm |
| Milling depth: | Z = –18 mm |

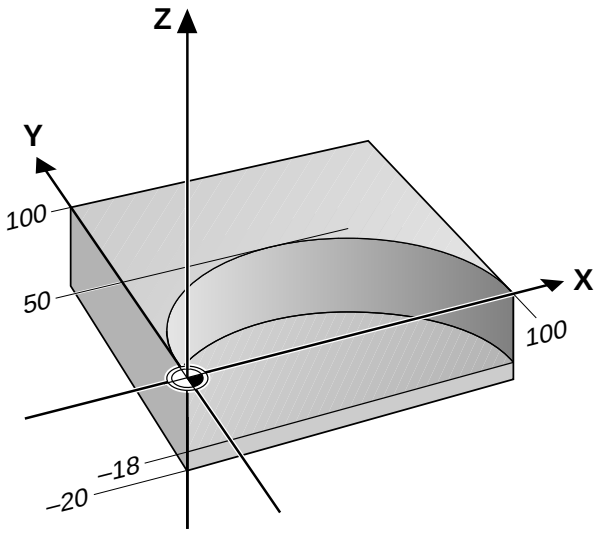


**Part program**

| | | |
|---|---|---|
| 0 | BEGIN PGM RADIUS M | Begin program |
| 1 | BLK FORM 0.1 Z X+0 Y+0 Z–20 | Define the workpiece blank |
| 2 | BLK FORM 0.2 X+100 Y+100 Z+0 | |
| 3 | TOOL DEF 2 L+0 R+25 | Define the tool |
| 4 | TOOL CALL 2 Z S2000 | Call the tool |
| 5 | L Z+100 R0 FMAX M6 | Insert and pre-position the tool |
| 6 | APPR LCT X+0 Y+0 Z–18 R30 RR F100 M3 | Approach contour with a straight line and tangential arc |
| 7 | CR X+100 Y+0 R50 DR– | Mill circular arc CR to the end point X = 100 mm, Y = 0; radius R = 50 mm, negative direction of rotation |
| 8 | DEP LCT X+70 Y–30 R20 F100 | Depart contour on a tangential arc with connecting straight line |
| 9 | L Z+100 F MAX M2 | |
| 10 | END PGM RADIUS MM | Retract tool and end program |



Downloaded from www.Manualslib.com manuals search engine

## Circular path CT with tangential connection

The tool moves in an arc that starts at a tangent with the previously programmed contour element.

A transition between two contour elements is called tangential when one contour element makes a smooth and continuous transition to the next. There is no visible corner at the intersection.

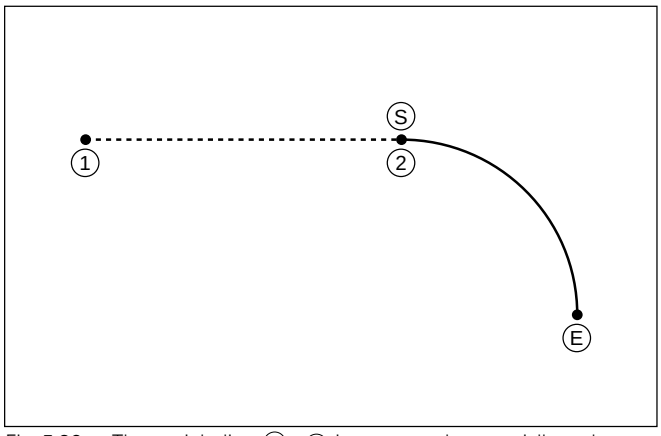


Fig. 5.36: The straight line ① - ② is connected tangentially to the circular arc Ⓢ - Ⓔ

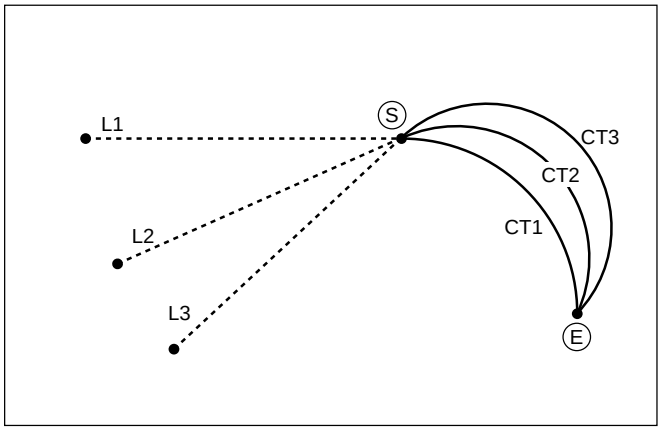


Fig. 5.37: The path of a tangential arc depends on the preceding contour element

**Input**

Coordinates of the arc end point

**Prerequisites:**

- The contour element to which the tangential arc connects must be programmed immediately before the CT block.
- There must be at least two positioning blocks defining the tangentially connected contour element before the CT block.

A tangential arc is a two-dimensional operation: the coordinates in the CT block and in the positioning block before it should be in the plane of the arc.



Downloaded from www.Manualslib.com manuals search engine

**To program a circular path CT with tangential connection:**

CT

**COORDINATES ?**

e.g. I X 5 0
I Y -/+ 1 0
ENT

Enter the coordinates of the arc end point, for example IX = 50 mm, IY = –10 mm.

If necessary, enter:

- Radius compensation
- Feed rate
- Miscellaneous function

*Resulting NC block: CT IX+50 IY–10 RR*

**Example for exercise: Circular arc connecting to a straight line**

Coordinates of the transition point from the straight line to the arc: X = 10 mm, Y = 40 mm

Coordinates of the arc end point: X = 50 mm, Y = 50 mm

Milling depth: Z = –15 mm

Tool radius: R = 20 mm

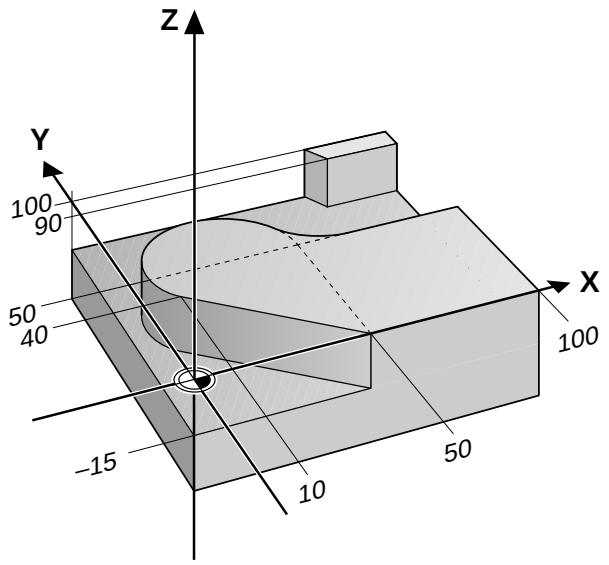


**Part program**

```
0  BEGIN PGM TANGENT MM ..... Begin the program
1  BLK FORM 0.1 Z X+0 Y+0 Z–20 ..... Define the blank
2  BLK FORM 0.2 X+100 Y+100 Z+0
3  TOOL DEF 2 L+0 R+20 ..... Define the tool
4  TOOL CALL 2 Z S 1000 ..... Call the tool
5  L Z+100 R0 FMAX M6 ..... Insert the tool
6  APPR LN X+50 Y+0 Z–15 LEN+20 RL F100 M3 .... Approach the contour on a straight line perpendicular to the
                                                 first contour element
7  L X+10 Y+40 ..... Straight line to with the arc connects tangentially
8  CT X +50 Y +50 ..... Arc to the end point with the coordinates X = 50 mm and
                        Y = 50 mm; connects tangentially to the straight line in
                        block 7
9  L X+100 ..... End of contour
10 DEP LCT X+130 Y+70 Z+100 R20 F2000 M2 ..... Depart contour on a tangential arc with connecting straight
                                               line; retract tool and end program
11 END PGM TANGENT MM
```



Downloaded from www.Manualslib.com manuals search engine

## Corner rounding RND

The tool moves in an arc that connects tangentially both with the preceding and the subsequent elements.

The TNC function is useful for rounding off corners.

### Input

- Radius of the arc
- Feed rate for RND

### Prerequisite

On inside corners, the rounding arc must be large enough to accommodate the tool.

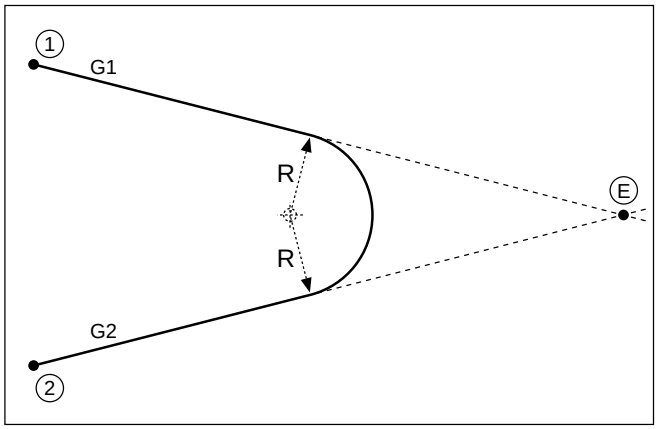


Fig. 5.38: Rounding radius R between G1 and G2

- In the preceding and subsequent positioning blocks both coordinates should lie in the plane of the arc.
- The corner point (E) is cut off by the rounding arc and is not part of the contour.
- A feed rate programmed in the RND block is effective only in that block. After the RND block the previous feed rate becomes effective again.
- You can also use an RND block for a tangential contour approach if you do not want to use an APPR function.

**To program a tangential arc between two contour elements:**

RND

| ROUNDING-OFF RADIUS R ? | |
|---|---|
| e.g. 1 0 ENT | Enter the rounding radius, for example R=10 mm. |

| FEED RATE ? F= | |
|---|---|
| e.g. 1 0 0 ENT | Enter the feed rate for the rounding radius, for example F=100 mm/min. |

*Resulting NC block: RND R 10 F 100*



Downloaded from www.Manualslib.com manuals search engine

**Example for exercise: Rounding a corner**

| | | |
|---|---|---|
| Coordinates of the corner point: | X = | 95 mm |
| | Y = | 5 mm |
| Rounding radius: | R = | 20 mm |
| Milling depth: | Z = | –15 mm |
| Tool radius: | R = | 10 mm |

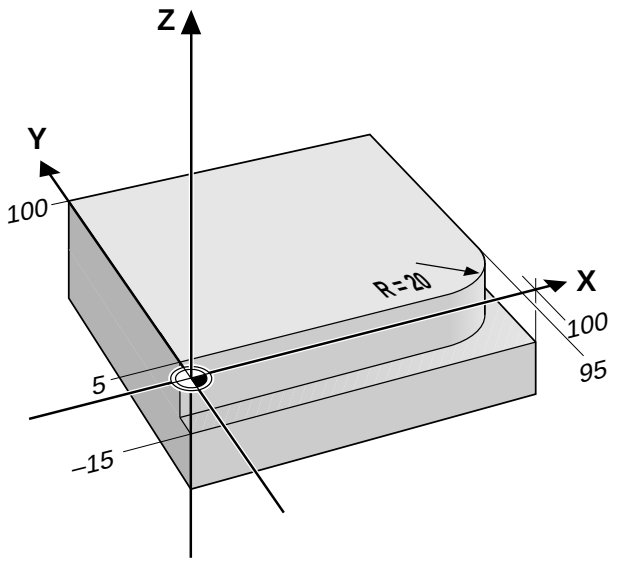


**Part program**

```
0  BEGIN PGM ROUNDING MM ..... Begin the program
1  BLK FORM 0.1 Z X+0 Y+0 Z–20 ..... Define the workpiece blank
2  BLK FORM 0.2 X+100 Y+100 Z+0
3  TOOL DEF 1 L+0 R+10 ..... Define the tool
4  TOOL CALL 1 Z S1500 ..... Call the tool
5  L Z+100 R0 FMAX M6 ..... Insert the tool
6  APPR LN X+0 Y+5 Z-15 LEN+20 RR F100 M3 ... Approach the contour on a straight line perpendicular to the
                                               first contour element
7  L X+95 ..... First straight line for the corner
8  RND R20 ..... Insert a tangential arc with radius R = 20 mm between the
                                               contour elements
9  L Y+100 ..... Second straight line for the corner
10 DEP LT LEN20 F100 ..... Depart the contour tangentially on a straight line
11 L Z+100 F MAX M2
12 END PGM ROUNDING MM
```



Downloaded from www.Manualslib.com manuals search engine

## 5.5 Path Contours – Polar Coordinates

Polar coordinates are useful for programming:

- Positions on circular arcs
- Positions from workpiece drawings showing angular dimensions

Polar coordinates are explained in detail in Section 1.2 "Fundamentals of NC".

Polar coordinates are marked with a P.

### Polar coordinate origin: Pole CC

You can define the pole anywhere in the program before the blocks containing polar coordinates. Enter the pole in Cartesian coordinates as a circle center in a CC block.

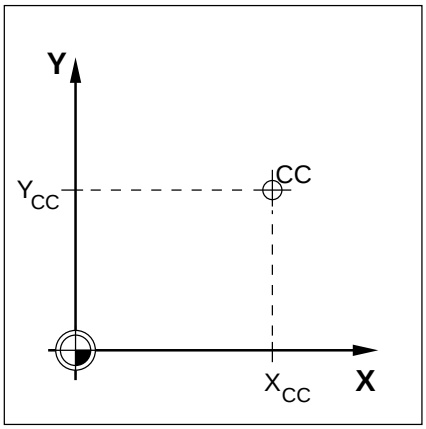


Fig. 5.39: The pole is entered as CC

### Straight line LP

- You can enter any value from -360° to +360° for PA.
- Enter the algebraic sign for PA relative to the angle reference axis:

  For an angle from the reference axis counterclockwise to PR: PA>0

  For an angle from the reference axis clockwise to PR: PA<0

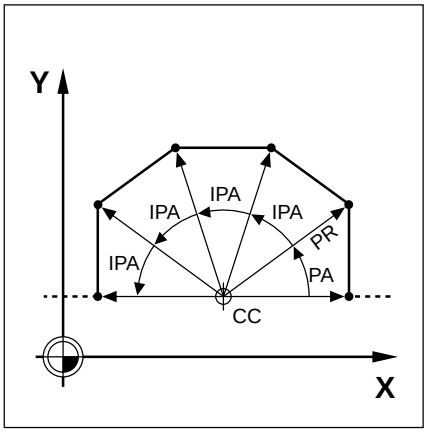


Fig. 5.40: Contour consisting of straight lines with polar coordinates



Downloaded from www.Manualslib.com manuals search engine

| COORDINATES ? | |
|---|---|
| P | Select polar coordinates. |

| POLAR COORDINATES-RADIUS PR ? | |
|---|---|
| e.g. 5 ENT | Enter the radius from the pole to the straight line end point, for example PR = 5 mm. |

| POLAR COORDINATES-ANGLE PA ? | |
|---|---|
| e.g. 3 0 ENT | Enter the angle from the reference axis to PR, for example PA = 30°. |

If necessary, enter:

Radius compensation R
Feed rate F
Miscellaneous function M

*Resulting NC block: LP PR+5 PA+30*



Downloaded from www.Manualslib.com manuals search engine

**Example for exercise: Milling a hexagon**

Corner point coordinates:

| | | | |
|---|---|---|---|
| ① | PA = 180° | PR = 45 mm |
| ② | PA = 120° | PR = 45 mm |
| ③ | PA = 60° | PR = 45 mm |
| ④ | PA = 0° | PR = 45 mm |
| ⑤ | PA = 300° | PR = 45 mm |
| ⑥ | PA = 240° | PR = 45 mm |

Milling depth: Z = –10 mm

Tool radius: R = 5 mm

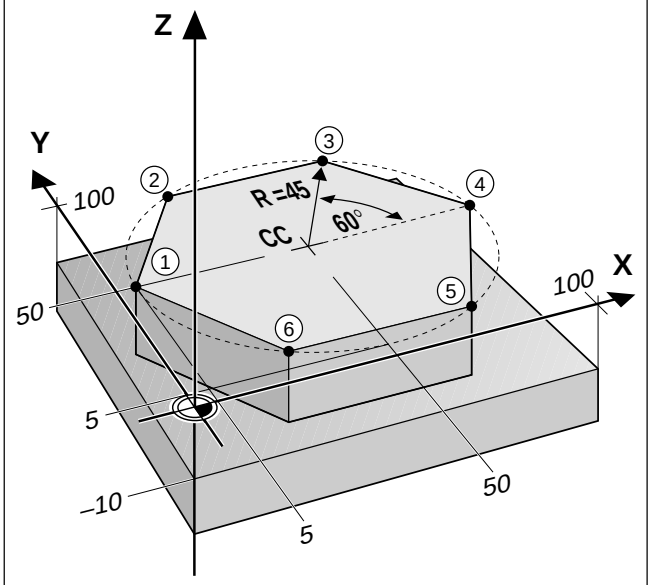


**Part program**

```
0  BEGIN PGM HEXAGON MM
1  BLK FORM 0.1 Z X+0 Y+0 Z–20
2  BLK FORM 0.2 X+100 Y+100 Z+0
3  TOOL DEF 1 L+0 R+5
4  TOOL CALL 1 Z S1000
5  CC X+50 Y+50
6  L Z+100 X-20 Y+50 R0 F MAX M6
7  L Z–10 F MAX
8  APPR PCT PR+45 PA+180 CCA180 R+20 RL F100 M3
```

} General data and first contour point (corner point ①)

```
9  LP PA+120
10 LP PA+60
11 LP IPA+0
12 LP PA–60
13 LP PA–-120
14 LP PA–-180
```

} Corner points ② to ⑥ and last contour point at ①; absolute and incremental programming

```
15 DEP CT CCA135 R+20 F100 ..... Depart the contour tangentially on an arc
16 L Z+100 F MAX M2
17 END PGM HEXAGON MM
```



Downloaded from www.Manualslib.com manuals search engine

## Circular path CP around pole CC

The polar coordinate radius is also the radius of the arc. It is already defined by the distance from the pole CC to the starting point Ⓢ .

**Input**

- Polar coordinate angle PA for arc end point
- Direction of rotation DR

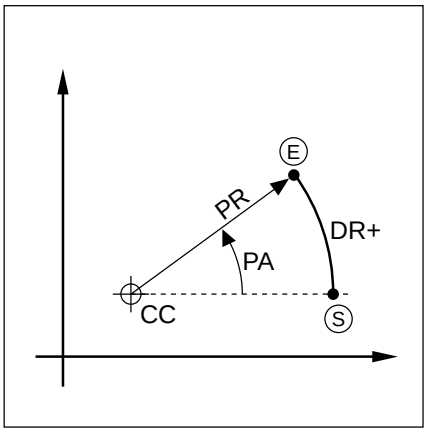


Fig. 5.41: Circular path around a pole

- For incremental values, enter the same sign for DR and PA.
- You can enter values from -5400° to +5400° for PA.

| | |
|---|---|
| **COORDINATES ?** | |
| P | Select polar coordinates. |
| **POLAR COORDINATES-ANGLE PA ?** | |
| e.g. 1 0 ENT | Enter the angle PA of the arc end point = 10°. |
| **ROTATION CLOCKWISE: DR- ?** | |
| −/+ ENT | Set the direction of rotation for the tool path, for example negative for clockwise rotation. |

**If necessary, enter:**

Radius compensation R
Feed rate F
Miscellaneous function M

*Resulting NC block: CP PA+10 DR–*



Downloaded from www.Manualslib.com manuals search engine

**Example exercise: Milling a full circle**

| | | | |
|---|---|---|---|
| Circle center coordinates: | X | = | 50 mm |
| | Y | = | 50 mm |
| Radius: | R | = | 50 mm |
| Milling depth: | Z | = | –5 mm |
| Tool radius: | R | = | 15 mm |

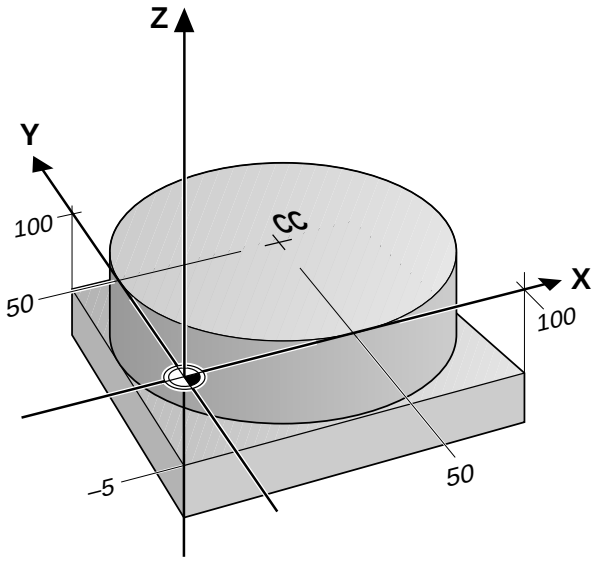


**Part program**

```
0  BEGIN PGM POLCIRC MM
1  BLK FORM 0.1 Z X+0 Y+0 Z–20
2  BLK FORM 0.2 X+100 Y+100 Z+0
3  TOOL DEF 1 L+0 R+15
4  TOOL CALL 1 Z S1000
5  CC X+50 Y+50
6  L Z+100 R0 F MAX M6
7  APPR LN X+50 Y+0 Z-5 LEN+20 RL F100 M3
```

} General data and first contour point

```
8  CP PA+270 DR– ..... Circle to end point PA = 270°, negative direction of rotation
```

```
9  DEP CT CCA180 R+20 F100
10 L Z+100 F MAX M2
11 END PGM POLCIRC MM
```

} Retract tool and end program



Downloaded from www.Manualslib.com manuals search engine

## Circular path CTP with tangential connection

The tool moves on a circular path, starting tangentially (at ②) from a preceding contour element (① to ②).

**Input:**

- Polar coordinate angle PA of the arc end point Ⓔ
- Polar coordinate radius PR of the arc end point Ⓔ

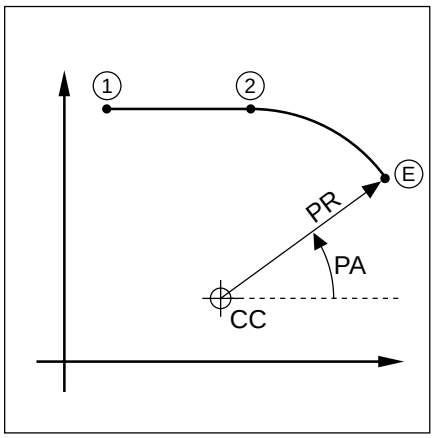


Fig. 5.42: Circular path around a pole, tangential connection

- The transition points must be defined exactly.
- The pole is not the center of the contour arc.

| CT | COORDINATES ? | |
|---|---|---|
| | P | Select polar coordinates. |
| | **POLAR COORDINATES-RADIUS PR ?** | |
| | 1 0 ENT | Enter the distance from the pole to the arc end point, for example PR = 10 mm. |
| | **POLAR COORDINATES-ANGLE PA ?** | |
| | 8 0 ENT | Enter the angle from the reference axis to PR, for example PA = 80°. |

**If necessary, enter:**

Radius compensation R
Feed rate F
Miscellaneous function M

*Resulting NC block: CTP PR +10 PA +80*



Downloaded from www.Manualslib.com manuals search engine

## Helical interpolation

A helix is a combination of a circular movement in a main plane and a linear movement perpendicular to this plane.

A helix is programmed only in polar coordinates.

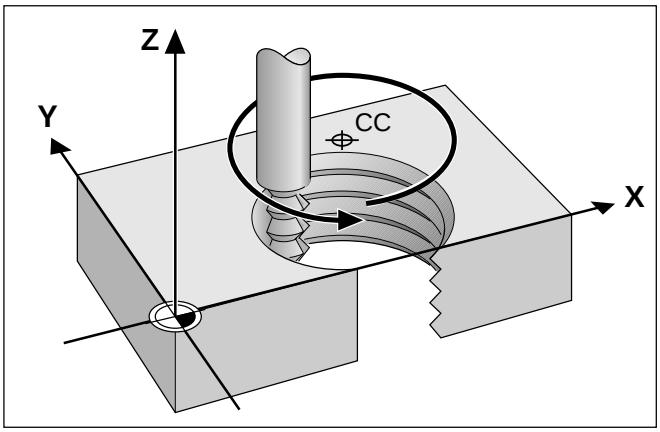


Fig. 5. 43: Helix: a combination of circular and linear paths

### Applications:

You can use helical interpolation with form cutters to machine:

- Large-diameter internal and external threads
- Lubrication grooves

### Input

- Total incremental angle of tool traverse on the helix
- Total height of the helix

### Input angle

Always enter the same sign for the rotation as for the incremental input angle. Otherwise the TNC may move the tool along the wrong path.

Calculate the incremental polar coordinate angle IPA as follows:

IPA = n · 360°; where
n = number of revolutions of the helical path.

For IPA you can enter any value from –5400° to +5400° (n = 15). If your thread has more than 15 revolutions, program the helical interpolation in a program section repeat (see page 5-40).

### Input height

Enter the helix height H in the tool axis. The height is calculated as:

H = n x P,
n = number of thread revolutions
P = thread pitch

### Radius compensation

Enter the radius compensation for the helix according to the table at right.

| Internal thread | Work direction | Direction | Radius comp. |
|---|---|---|---|
| Right-hand | Z+ | DR+ | RL |
| Left-hand | Z+ | DR- | RR |
| Right-hand | Z- | DR- | RR |
| Left-hand | Z- | DR+ | RL |

| External thread | Work direction | Direction | Radius comp. |
|---|---|---|---|
| Right-hand | Z+ | DR+ | RR |
| Left-hand | Z+ | DR- | RL |
| Right-hand | Z- | DR- | RL |
| Left-hand | Z- | DR+ | RR |

Fig. 5.44: The shape of the helix determines the direction of rotation and the radius compensation



Downloaded from www.Manualslib.com manuals search engine

**To program a helix:**

| | |
|---|---|
| **COORDINATES ?** | |
| P | Select polar coordinates. |
| **POLAR COORDINATES-ANGLE PA ?** | |
| I | Enter PA incrementally. |
| e.g. 1 0 8 0 | Enter the total angle of tool traverse along the helix, for example PA = 1080°. |
| e.g. Z | Enter the tool axis, for example Z. |
| **COORDINATES ?** | |
| if necessary I | Identify the height entry as incremental. |
| e.g. 5 | Enter the helix height, for example H = 5 mm. |
| ENT | Terminate coordinate input. |
| **ROTATION CLOCKWISE: DR- ?** | |
| 1 x −/+ or 2 x −/+ ENT | Clockwise helix: DR– or counterclockwise: DR+. |
| **TOOL RADIUS COMP.: RL/RR/NO COMP.?** | |
| RL or RR | Enter radius compensation according to the table. |

**If necessary, enter:**

Feed rate F
Miscellaneous function M

*Resulting NC block: CP IPA+1080 IZ+5 DR–RL*



Downloaded from www.Manualslib.com manuals search engine

**Example for exercise: Tapping**

**Given Data**

Thread:
Right-hand internal thread M64 × 1.5

| | |
|---|---|
| Pitch P: | 1.5 mm |
| Start angle $A_S$ | 0° |
| End angle $A_E$: | 360° = 0° at $Z_E$ = 0 |
| Thread revolutions $n_R$: | 8 |
| Thread overrun: | |
| • at start of thread $n_S$: | 0.5 |
| • at end of thread $n_E$: | 0.5 |
| Number of cuts: | 1 |

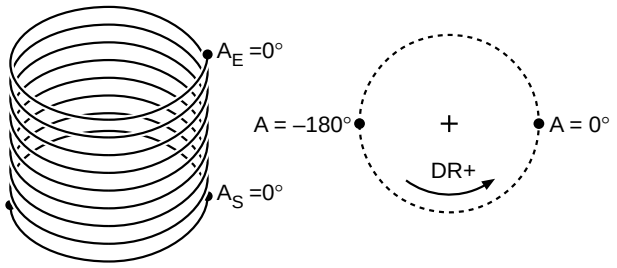


**Calculating the input values**

- Total height H: H = P · n
  P = 1.5 mm
  n = $n_R$ + $n_S$ + $n_E$ = 9
  H = 13.5 mm
- Incremental polar coordinate angle IPA: IPA = n · 360°
  n = 9 (see total height H)
  IPA = 360° · 9 = 3240°
- Start angle $A_S$ with thread overrun $n_S$: $n_S$ = 0.5

  The starting angle of the helix is advanced by 180° (n=1 corresponds to 360°). With positive rotation this means
  $A_S$ with $n_S$ = $A_S$ – 180° = –180°
- Starting coordinate: Z = P · ($n_R$ + $n_S$)
  = –1.5 · 8.5 mm
  = –12.75 mm

  The thread is being cut in an upward direction towards $Z_E$ = 0; therefore $Z_S$ is negative.

**Part program**

```
0   BEGIN PGM THREAD MM
1   BLK FORM 0.1 Z X+0 Y+0 Z–20
2   BLK FORM 0.2 X+100 Y+100 Z+0
3   TOOL DEF 1 L+0 R+5
4   TOOL CALL 1 Z S 1500
5   L Z+100 R0 F MAX M6
6   L X+50 Y+50 F MAX
7   CC
8   L Z-12.75 R0 F MAX M3
9   APPR PCT PR+32 PA–180 CCA180 R+20 RL F100
10  CP IPA +3240 IZ+13.5 DR+ F200
11  DEP CT CCA180 R+10
12  L Z+100 FMAX M2
13  END PGM THREAD MM
```

**Part program for more than 15 revolutions (see also Chapter 6)**

```
•
8   L Z-12.75 R0 F MAX M3
9   APPR PCT PR+32 PA–180 CCA180 R+20 RL F100
10  LBL 1 ..... Label the starting block for a program section repetition
11  CP IPA +360 IZ+1.5 DR+ F200 ..... Enter the pitch directly as an IZ value
12  CALL LBL 1 REP 24 ..... Program the number of revolutions
13  DEP CT CCA180 R+10
•
```



Downloaded from www.Manualslib.com manuals search engine

## 5.6 Contours – FK Free Contour Programming

Workpiece drawings often contain unconventional coordinate data that cannot be entered with the gray path function keys. You can enter such dimensional data directly on the TNC by using its FK free contour programming feature.

FK programming allows you to define a contour element through

- Auxiliary points on the contour element
- Auxiliary points in its proximity
- A reference to another contour element
- Directional data
- Data regarding the course of the contour

FK programming is supported with soft keys.

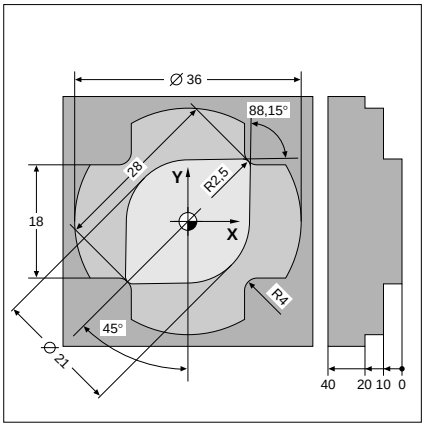


Fig. 5.45: These dimensions can be programmed with FK

### Programming contour elements with FK

FK contour elements must lie in the working plane perpendicular to the spindle axis as it was defined in the first BLK FORM of a program.

You must enter all available data for every contour element. Even data that does not change must be entered in every block – otherwise it is not recognized.

After you have entered all known data for a contour element, close the block with END.

If both FK blocks and conventional blocks are entered in a program, the FK contour must be fully defined before you can return to conventional programming.

#### Pre-positioning

You must first pre-position the tool with a gray path function key. The programmed position must be near a well-defined contour element. If the coordinates of the first contour point are known, you can pre-position the tool with the traversing function.



Downloaded from www.Manualslib.com manuals search engine

### Initiating FK contour programming

You can program free contour elements with the following soft keys:

| Contour element | Soft key |
|---|---|
| • Straight line with tangential connection FLT | 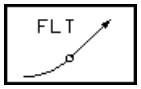 |
| • Straight line without tangential connection FL | 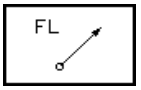 |
| • Circular arc with tangential connection FCT | 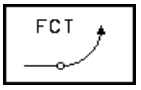 |
| • Circular arc without tangential connection FC | 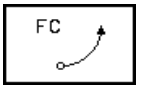 |

FPOL defines the pole for FK polar coordinates.

FPOL is set with Cartesian coordinates and remains effective until it is redefined.

| | |
|---|---|
| • Pole for programming FK coordinates FPOL | 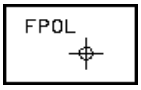 |



Downloaded from www.Manualslib.com manuals search engine

## Interactive graphics during FK programming

You can use two-dimensional contour-line graphics as an aid during FK programming. The screen shows the contour elements as you program them and offers you possible solutions when the contour is not yet fully defined.

The programmed contour elements are displayed in various colors (see fold-out of the front cover):

White: The contour element is fully defined.
Green: The entered data describes a limited number of possible solutions.
Red: The entered data could describe an infinite number of possible solutions.

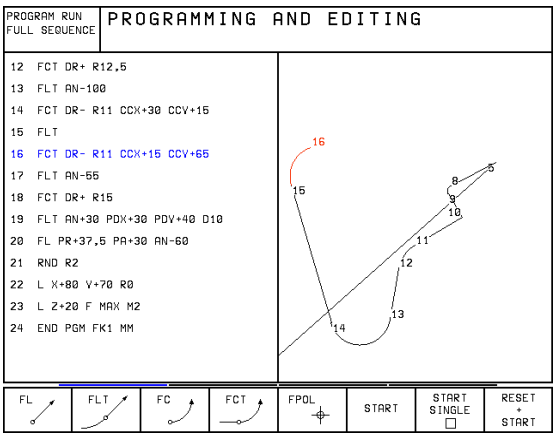


Fig. 5.46: FK programming with interactive graphics

- The machine tool builder may use other colors for the interactive graphics.
- NC blocks from a program that you called with PGM CALL (see page 6-8) are displayed in another color, which is defined by machine parameter.

The following soft key row appears if the entered data permit a limited number of possible solutions:

| | |
|---|---|
| SHOW | Show the possible solutions described by the entered data. |
| FSELECT | Select the solution that matches the drawing. |

Use the SHOW and FSELECT functions to choose a proposed (green) contour element. The element then appears white on the screen.

Select the green contour elements (ambiguous data) as soon as possible. In this way you can reduce the ambiguity of subsequent elements.

If you do not yet wish to select an element, press the EDIT soft key:

| | |
|---|---|
| EDIT | Enter data for subsequent contour elements. |



Downloaded from www.Manualslib.com manuals search engine

## FK Functions

| Known data | Soft key |
|---|---|
| Cartesian coordinates for the end point of a straight line or circular arc | 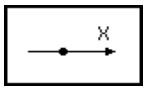  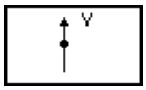  |
| Polar coordinates for the end point of a straight line or circular arc | 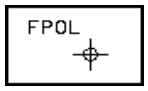  with 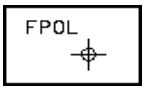  with 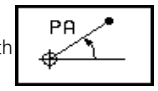  |
| Gradient angle of a straight line or entry tangent to a circular arc | 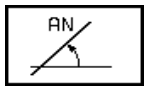  / 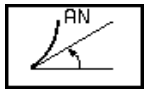  |
| Length of a straight line or arc | 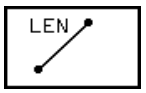  / 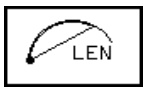  |
| Parallel path of a straight line to another straight line or to a tangent approaching an arc/ Distance between the parallel contour elements | 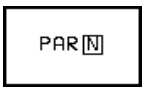  / |
| Beginning or end of a closed contour | 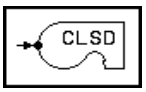  |
| Cartesian coordinates of auxiliary points:<br>• on or in the direction of a straight line<br>• on an arc | 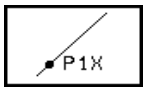  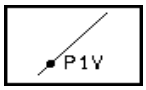  etc.<br> 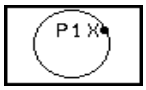  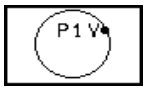  etc. |
| Cartesian coordinates of an auxiliary point at distance D from a contour element | 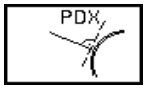  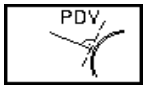  / 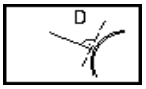  |
| Cartesian coordinates of a circle center | 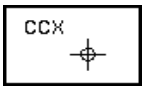  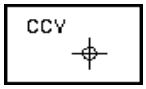  |
| Polar coordinates of a circle center | 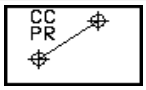  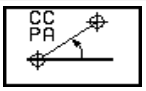  |
| Radius of an arc<br>Rotational direction of a circular path | 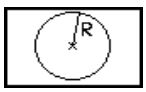  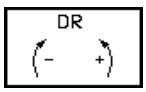  |
| Reference angle for the end of an arc | 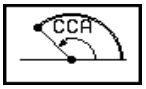  |

**Incremental values**

Incremental values are marked with an "I", just as they are in conventional programming.



Downloaded from www.Manualslib.com manuals search engine

### Values given relative to another contour element

Data whose values are based on another contour element are called incremental. You use an additional soft key to enter the number of the block on which the incremental value is based. The soft keys for such entries begin with the letter R for “relative.”

| Incremental data | Designate | Soft key for reference block N |
|---|---|---|
| Cartesian coordinates X, Y | I | RX N  RY N |
| Polar coordinates PR, PA | I | RPR N  RPA N |
| Gradient angle AN | I | RAN N |
| Circle center CC | | |
| • Cartesian coordinates for CC | I | RCCX N  RCCY N |
| • Polar coordinates for CC | I | RCCPR N  RCCPA N |



Downloaded from www.Manualslib.com manuals search engine

## Free programming of straight lines

**Direct data for straight lines or end points of straight lines**

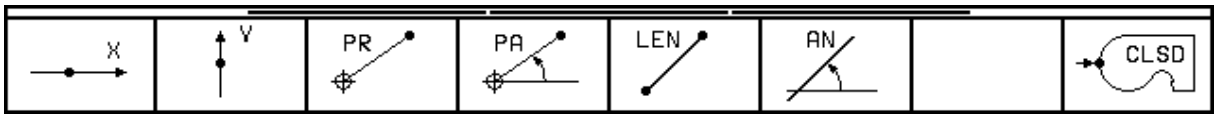


| Known data | Dialog | Soft key |
|---|---|---|
| X coordinate | X-COORDINATE ? | X |
| Y coordinate | Y-COORDINATE ? | Y |
| Polar coordinate radius | POLAR COORDINATES RADIUS ? | PR |
| Polar coordinate angle | POLAR COORDINATES ANGLE ? | PA |
| Length of a straight line | LENGTH OF EDGE ? | LEN |
| Gradient angle of a straight line | SLOPE ? | AN |
| Begin/End of a closed contour | CLOSED CONTOUR: BEGIN/END = +/– | CLSD |



Downloaded from www.Manualslib.com manuals search engine

**Example for exercise: Angle between two lines, length**

Known data for line G1:

G1 forms the angle IAN=45° with the previous contour element E1 and has the length LEN=20 mm.

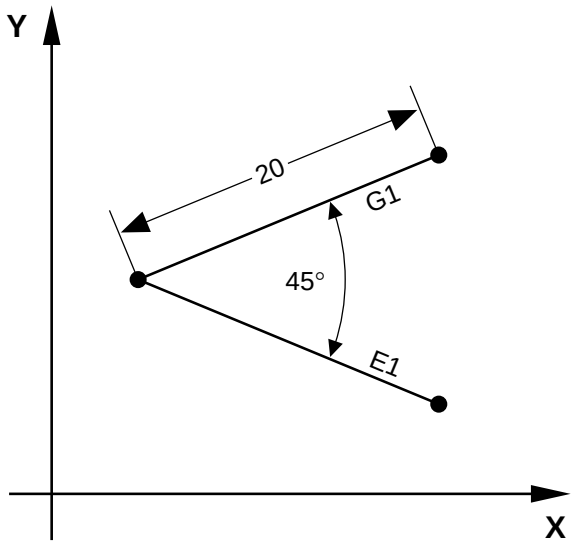


Initiate the dialog:

FL

Straight line without tangential connection

Enter angle:

AN

| SLOPE ? | |
|---|---|
| I 4 5 | Enter incremental angle IAN=45°. |

Enter length of straight line:

LEN

| LENGTH OF EDGE ? | |
|---|---|
| 2 0 | Enter length, LEN=20 mm. |

Close the block:

END

*Resulting NC block: FL IAN+45 LEN 20*



Downloaded from www.Manualslib.com manuals search engine

**Values given relative to another contour element or contour position**

| Known data | Dialog | Soft key |
|---|---|---|
| X coordinate relative to an end point of block N | IX DATUM: ENDPOINT OF BLOCK? | RX N |
| Y coordinate relative to an end point of block N | IY DATUM: ENDPOINT OF BLOCK? | RV N |
| Polar-coordinate change of radius relative to block N | IPR DATUM = BLOCK ? | RPR N |
| Polar-coordinate change of angle relative to block N | IPA DATUM = BLOCK ? | RPA N |
| Angle from a straight line and another element | IAN DATUM = BLOCK ? | RAN N |
| Straight line parallel to another contour element | STRAIGHT LINE PARALLEL TO BLCK? | PAR N |
| Distance from a straight line and a parallel element | DIST BETWN PARALLEL STRAIGHTS? | DP |

Data relative to another contour element are entered as incremental values.



Downloaded from www.Manualslib.com manuals search engine

**Example for exercise: Cartesian coordinates based on the end point of another contour element**

Known data for line G1:

Distance in the X axis from the end point of the contour element E1 to the end point of the line G1 is IX = 8 mm.

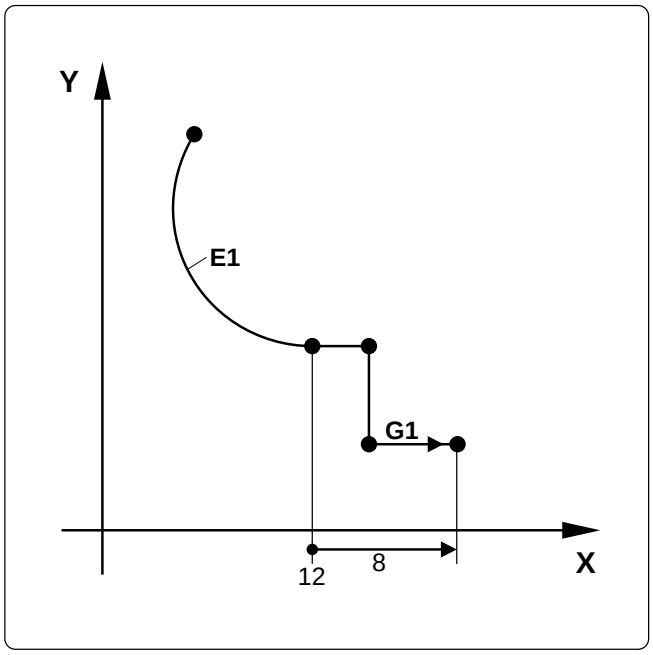


Initiate the dialog:

FL

Straight line without tangential connection

Enter the incremental value in the X axis:

X

| X-COORDINATE ? | |
|---|---|
| I 8 | Enter the distance between the elements, IX = 8 mm. |

Enter the datum as end point of element E1:

RX N

| IX DATUM = ENDPOINT OF BLOCK ? | |
|---|---|
| e.g. 5 | Enter the number of the block in which the element E1 is programmed, for example 5. |

Close the block:

END

*Resulting NC block: FL IX+8 RX5*



Downloaded from www.Manualslib.com manuals search engine

**Auxiliary points**

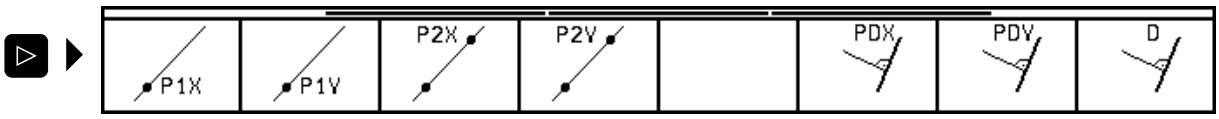


- Auxiliary points on a straight line or on the extension of a straight line

| Known data | Dialog | Soft key |
|---|---|---|
| X coordinate of an auxiliary point 1 | AUXILIARY POINT 1 X-COORDINATE ? | P1X |
| Y coordinate of an auxiliary point 1 | AUXILIARY POINT 1 Y-COORDINATE ? | P1Y |
| X coordinate of an auxiliary point 2 | AUXILIARY POINT 2 X-COORDINATE ? | P2X |
| Y coordinate of an auxiliary point 2 | AUXILIARY POINT 2 Y-COORDINATE ? | P2Y |

- Auxiliary point at a distance D from a straight line

| Known data | Dialog | Soft key |
|---|---|---|
| X coordinate of the auxiliary point | DIST AUXIL POINT PD X-COORDINATE | PDX |
| Y coordinate of the auxiliary point | DIST AUXIL POINT PD Y-COORDINATE | PDY |
| Distance auxiliary point/straight line | DISTANCE FROM AUXILIARY POINT ? | D |



Downloaded from www.Manualslib.com manuals search engine

**Example for exercise: Auxiliary point at a distance from a straight line**

Known data for G1:

Auxiliary point PD with the coordinates PDX = 15 mm and PDY = 20 mm lies at the distance D = 5 mm from G1.

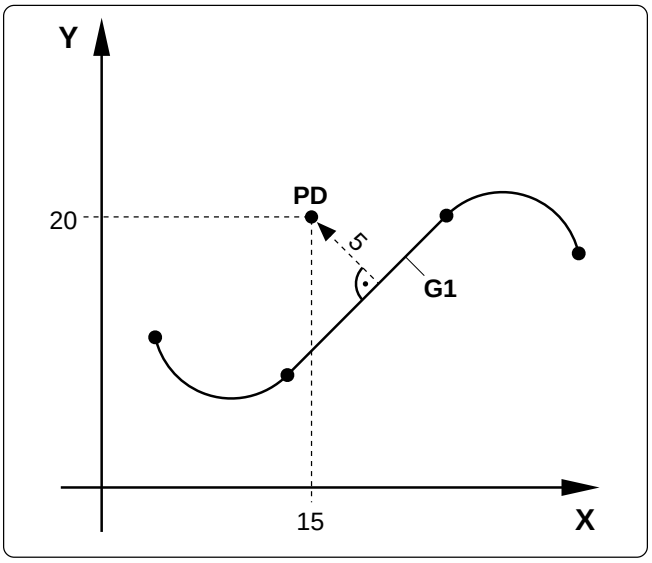


Initiate the dialog:

FLT

Straight line with tangential connection

Enter the X coordinate of the auxiliary point:

PDX

| DIST AUXIL POINT PD X-COORDINATE | |
|---|---|
| 1 5 | Enter the X coordinate of auxiliary point PD, X=15 mm. |

Enter the Y coordinate of the auxiliary point:

PDY

| DIST AUXIL POINT PD Y-COORDINATE | |
|---|---|
| 2 0 | Enter the Y coordinate of auxiliary point PD, Y=20 mm. |

Enter the distance from the auxiliary point to the straight line:

D

| DISTANCE FROM AUXILIARY POINT ? | |
|---|---|
| 5 | Enter the distance from the auxiliary point PD to the straight line G1, D=5 mm. |

Close the block:

END

*Resulting NC block: FLT PDX+15 PDY+20 D5*



Downloaded from www.Manualslib.com manuals search engine

## Free programming of circular arcs

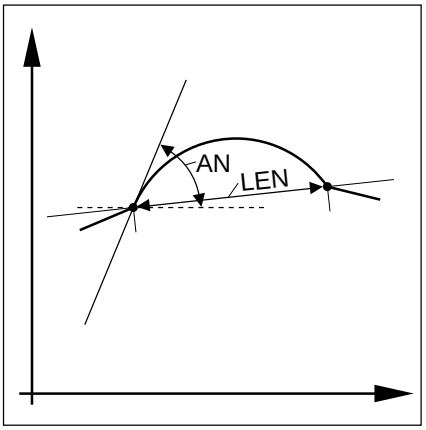


Fig. 5.47: Gradient angle and chord length of an arc

### Gradient angle of an arc

The gradient angle AN of an arc is defined by the entry tangent.

### Chord length of an arc

The chord length LEN of an arc is the linear distance between its end points.

### Center of free-programmed circles

The TNC calculates a circle center for free-programmed arcs (FC and FCT blocks). This makes is possible to program full circles in an FK program block.

A circle center that was previously entered or calculated is then no longer valid.

If, for example, you enter conventional polar coordinates that refer to a pole from a CC block preceding an FC or FCT block, then you must enter the pole again.

Input procedures and soft keys not described here have the same functions as for straight lines.

### Direct input for an arc or arc end point

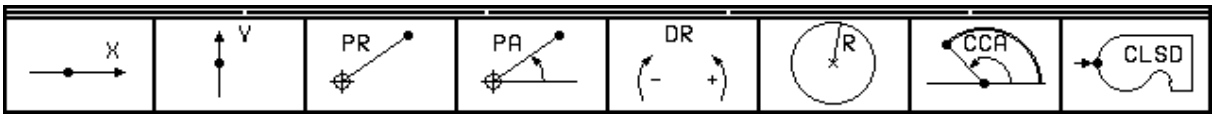


| Known data | Dialog | Soft key |
|---|---|---|
| Rotational direction of the arc | ROTATION CLOCKWISE: DR-? | DR |
| Radius of the arc | CIRCLE RADIUS? | R |
| Angle of leading axis to arc end point | ANGLE FOR ENDPOINT OF CIRCLE ? | CCA |



Downloaded from www.Manualslib.com manuals search engine

**Data on the circle center**

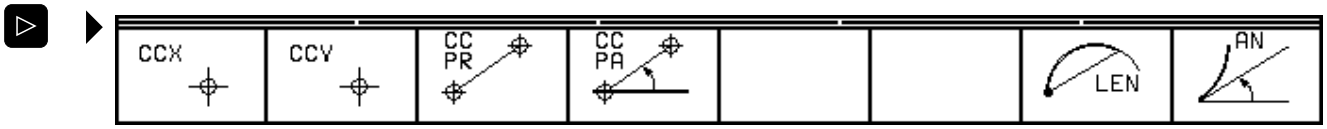


| Known data | Dialog | Soft key |
|---|---|---|
| X coordinate of the circle center | CIRCLE CENTER X COORDINATE ? | CCX |
| Y coordinate of the circle center | CIRCLE CENTER Y COORDINATE ? | CCV |
| Polar coordinate radius of the circle center | CIRCLE CENTER POLAR RADIUS ? | CC PR |
| Polar coordinate angle of the circle center | CIRCLE CENTER POLAR ANGLE ? | CC PA |

**Data that refer to another contour element or another contour position**

Circle end points and circle centers can be entered incrementally relative to another contour element. For the meanings of the soft keys, see “Free programming of straight lines” .

**Relative data for coordinates of an arc**

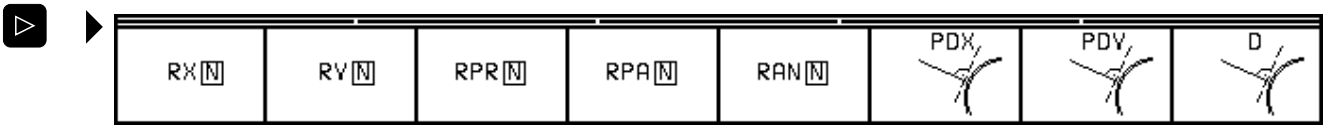


**Relative data for circle center coordinates**

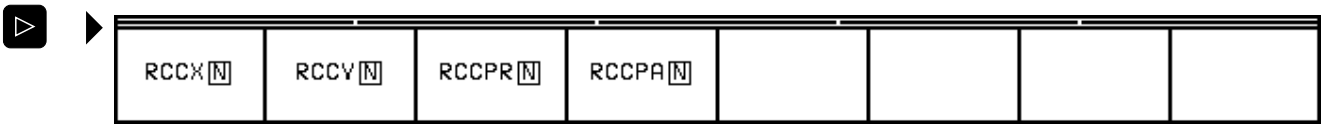




Downloaded from www.Manualslib.com manuals search engine

**Example for exercise: Circle center in polar coordinates related to the end point of another contour element**

Known data for CC:

- Cartesian coordinates of FPOL:
  X = 13, Y = 17 mm
- Polar coordinate radius
  is 20 mm shorter than the distance from FPOL to the end point of E1:
  IPR = –20 mm
- Polar coordinate angle is 33° greater than the corresponding angle for the end point of E2:
  IPA = 33°

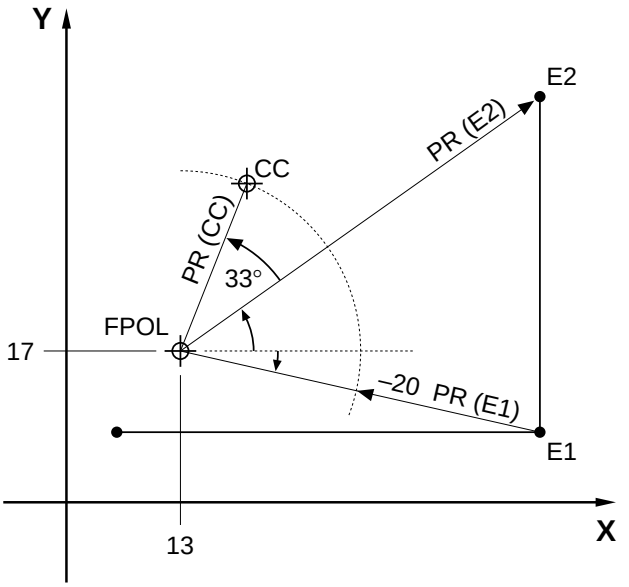


Initiate the dialog for FPOL:

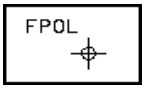


Enter the X coordinate of FPOL:

| FPOL: COORDINATES ? | |
|---|---|
| 1 3 | Enter the X coordinate, X=13 mm. |

Enter the Y coordinate of FPOL:

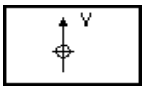


| FPOL: COORDINATES ? | |
|---|---|
| 1 7 | Enter the Y coordinate, Y=17 mm. |

Close the block:

END

*Resulting NC block: FPOL X+13 Y+17*



Downloaded from www.Manualslib.com manuals search engine

Initiate dialog for CC:

CC is valid for an arc without tangential connection.

Enter incremental polar coordinate radius for CC:

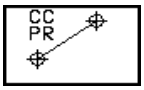


| CIRCLE CENTER POLAR RADIUS ? | |
|---|---|
| I −/+ 2 0 | Enter difference in polar radius, IPR = –20 mm. |

Enter incremental polar coordinate angle for CC:

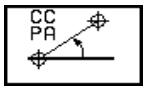


| CIRCLE CENTER POLAR ANGLE ? | |
|---|---|
| I 3 3 | Enter change in the polar coordinate angle, IPA = 33°. |

Enter reference for PR:

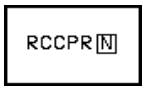


| IPR DATUM = BLOCK ? | |
|---|---|
| e.g. 1 8 | Enter the number of the block in which the element E1 is programmed, for example 18. |

Enter reference for PA:

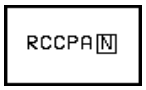


| IPA DATUM = BLOCK ? | |
|---|---|
| e.g. 2 1 | Enter the number of the block in which the element E1 is programmed, for example 21. |

Close the block:

END

*Resulting NC block:*
*FC ICCPR–20 ICCPA+33 RCCPR18 RCCPA21*



Downloaded from www.Manualslib.com manuals search engine

**Auxiliary points**

Auxiliary points are entered for arcs in the same way as for straight lines. You can program a third auxiliary point for an arc.

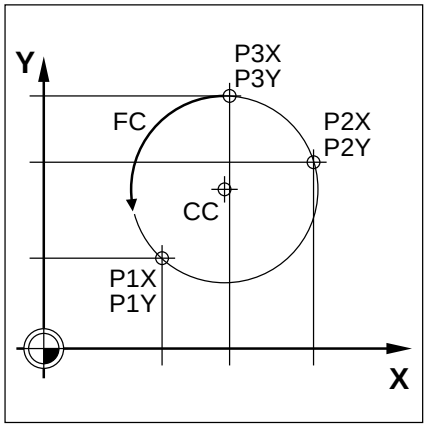


Fig. 5.48: Auxiliary points on a free arc

**Example for exercise: Auxiliary points on an arc**

Known data for circular arc C1:

Auxiliary points P1, P2 with the coordinates for

P1 : P1X = 5 mm P1Y = 5 mm
P2 : P2X = 15 mm P2Y = 20 mm

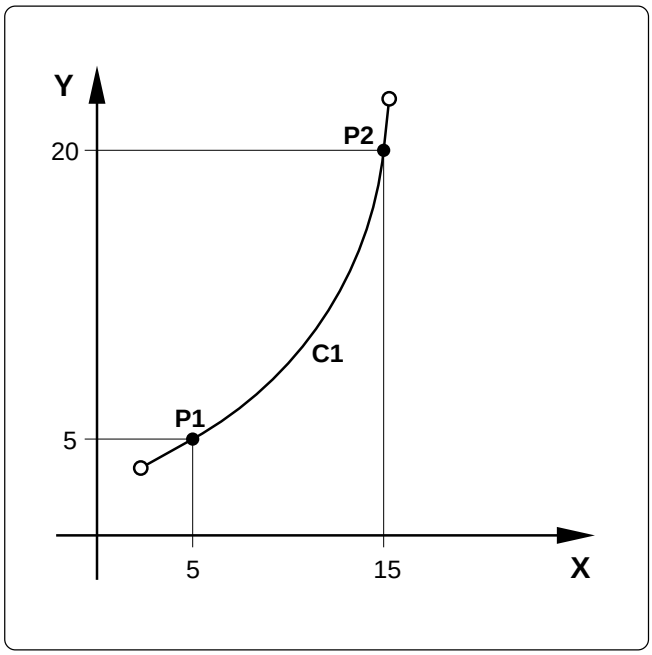


For clarity, the drawing contains only the data described above.

Initiate the dialog:

Circular arc without tangential connection

Enter the coordinates of the first auxiliary point:

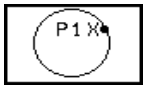


| AUXILIARY POINT 1 X-COORDINATE ? | |
|---|---|
| 5 | Enter the X-coordinate of the auxiliary point P1, P1X = 5 mm. |

. . .



Downloaded from www.Manualslib.com manuals search engine

. . .

P1Y

| AUXILIARY POINT 1 Y-COORDINATE ? | |
|---|---|
| 5 | Enter the Y coordinate of the point P1, P1Y = 5 mm. |

Enter the coordinates of the second auxiliary point:

P2X

| AUXILIARY POINT 2 X-COORDINATE ? | |
|---|---|
| 1 5 | Enter the X coordinate of the auxiliary point P2, P2X = 15 mm. |

P2Y

| AUXILIARY POINT 2 Y-COORDINATE ? | |
|---|---|
| 2 0 | Enter the Y coordinate of the auxiliary point P2, P2Y = 20 mm. |

Close the block:

END

*Resulting NC block: FC P1X+5 P1Y+5 P2X+15 P2Y+20*

## Identifying closed contours

You can identify the beginning and end of a closed contour with the CLSD soft key. This reduces the number of possible solutions for the last contour element.

Enter CLSD as an addition to another contour data entry.

The closed contour results from the geometric context, for example from a tangential transition.

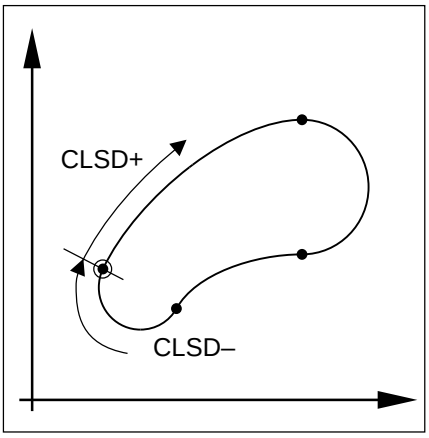


Fig. 5.49: Beginning and end of a closed contour

**To program a closed contour:**

CLSD

| CLOSED CONTOUR: BEGIN/END = +/- | |
|---|---|
| 2x -/+ or 1x -/+ | The contour element is the beginning of a closed contour, or the end of a closed contour whose beginning was identified with CLSD+. |



Downloaded from www.Manualslib.com manuals search engine

## Converting FK programs

You can convert an FK program so that all the F blocks are changed to HEIDENHAIN dialog blocks (see page 1-36).

You therefore may have to redefine circle centers in the converted program that were entered in the FK program before the FK blocks were entered.

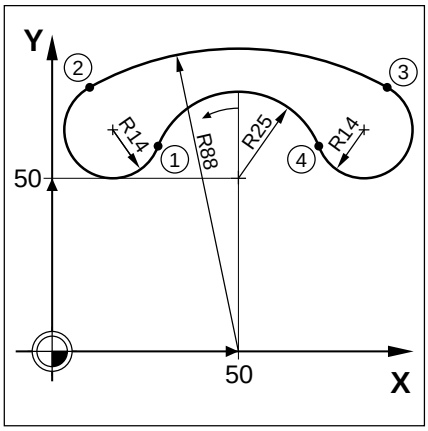


Fig. 5.50: Drawing for the program FKYOKE

**FK program**

```
0  BEGIN PGM FKYOKE MM
1  BLK FORM 0.1 Z X+0 Y+0 Z–20
2  BLK FORM 0.2 X+100 Y+100 Z+0
3  TOOL DEF 1 L+0 R+2
4  TOOL CALL 1 Z S500
5  L Z+100 R0 F MAX M6
6  APPR LN X+50 Y+75 Z–10 LEN+20 RL F100 M3
7  FC DR+ R25 CCX+50 CCY+50  ①
8  FCT DR– R14               ②
9  FCT DR– R88 CCX+50 CCY+0  ③
10 FCT DR–R14                ④
11 FCT X+50 Y+75 DR+ R25 CCX+50 CCY+50
12 FSELECT 2

13 DEP LCT X+50 Y+30 Z+100 R20 F2000 M2
14 END PGM FKYOKE MM
```

**Converted program**

```
0  BEGIN PGM YOKE MM
1  BLK FORM 0.1 Z X+0 Y+0 Z–20
2  BLK FORM 0.2 X+100 Y+100 Z+0
3  TOOL DEF 1 L+0 R+2
4  TOOL CALL 1 Z S500
5  L Z+100 R0 F MAX M6
6  APPR LN X+50 Y+75 Z–10 LEN+20 RL F100 M3

7  CC X+50 Y+50
8  CX+26.805 Y+59.3269 DR+
9  CC X+13.8158 Y+64.55
10 C X+6.9701 Y+76.7622 DR–
11 CC X+50 Y+0
12 C X+93.0299 Y+76.7622 DR–
13 CC X+86.1842 Y+64.55
14 C X+73.195 Y+59.3269 DR–
15 CC X+50 Y+50
16 C X+50 Y+75 DR+

17 DEP LCT X+50 Y+30 Z+100 R20 F2000 M2
18 END PGM YOKE MM
```



Downloaded from www.Manualslib.com manuals search engine

**Example 1 for exercise in FK free contour programming**

**Part program**

```
0   BEGIN PGM FKEXAMP1 MM
1   BLK FORM 0.1 Z X+0 Y+0 Z–20
2   BLK FORM 0.2 X+100 Y+100 Z+0
3   TOOL DEF 1 L+0 R+2
4   TOOL CALL 1 Z S100
5   L Z+100 R0 F MAX M6
6   APPR LT X+0 Y+0 Z–15 LEN10 RL F100 M3
7   FPOL X+50 Y+20
8   FL LEN64.5 CLSD+ P1X+15 P1Y+35
9   FL PR+67 AN+21
10  FL IX+70 IY+0 RX8 RY9
11  FL LEN 40 PAR 8
12  FSELECT 2
13  FL X+75 Y+20
14  FL CLSD–
15  DEP LT LEN20 F1000 M2
16  END PGM FKEXAMP1 MM
```

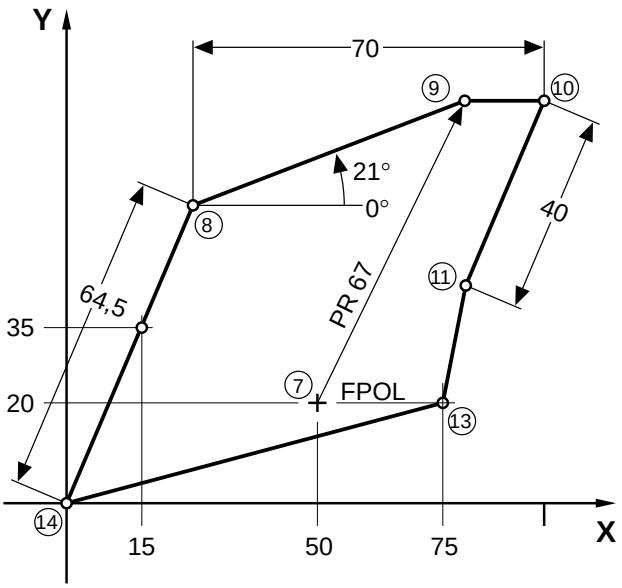


| Program block | Contour element | Known data | FK input |
|---|---|---|---|
| 7 | FPOL | • Cartesian coordinates | X,Y |
| 8 | Straight line FL | • Length<br>• Contour beginning<br>• Auxiliary point on the straight line | LEN<br>CLSD+<br>P1X, P1Y |
| 9 | Straight line FL | • Polar coordinate radius<br>• Gradient angle | PR<br>AN |
| 10 | Straight line FL | • X coordinate relative to block 8<br>• Y coordinate relative to block 9 | IX with RX N<br>IY with RY |
| 11 | Straight line FL | • Length<br>• Parallel to block 8 | LEN<br>PAR N |
| 13 | Straight line FL | • Cartesian coordinates | X, Y |
| 14 | Straight line FL | • End of contour | CLSD– |



Downloaded from www.Manualslib.com manuals search engine

**Example 2 for exercise in FK free contour programming**

**Part program**

```
0   BEGIN PGM FKEXAMP2 MM
1   BLK FORM 0.1 Z X+0 Y+0 Z–20
2   BLK FORM 0.2 X+100 Y+100 Z+0
3   TOOL DEF 1 L+0 R+5
4   TOOL CALL 1 Z S1000
5   L Z+100 R0 F MAX M6
6   APPR CT X+0 Y+30 Z–10
    CCA90 R+20 RR F100 M3
7   FPOL X+30 Y+30
8   FC DR– R30 CCX+30 CCY+30
9   FL AN+60 PDX+30 PDY+30 D+10
10  FSELECT 3
11  FC DR– R20 CCPR+55 CCPA+60
12  FSELECT 2
13  FL AN–120 PDX+30 PDY+30 D+10
14  FSELECT 3
15  FC X+0 Y+30 DR– CCX+30 CCY+30
16  FSELECT 2
17  DEP CT CCA180 R+10 F100
18  L Z+100 R0 F MAX M2
19  END PGM FKEXAMP2 MM
```

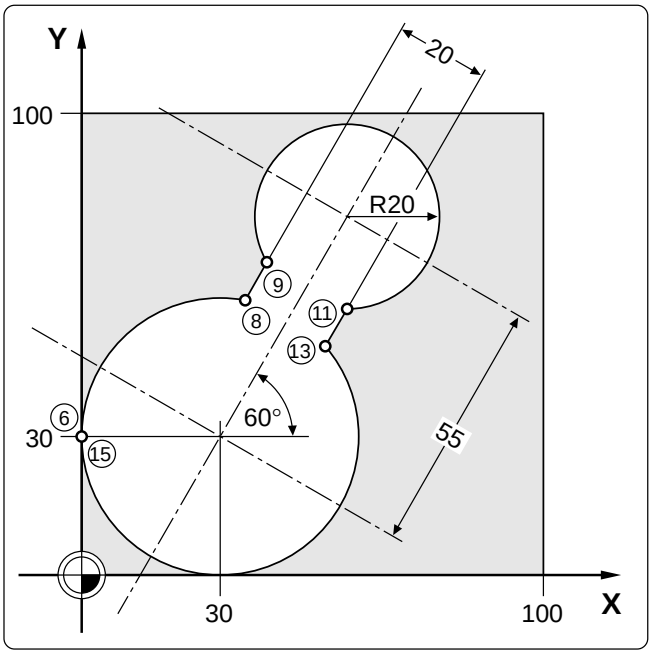


| Program block | Contour element | Known data | FK input |
|---|---|---|---|
| 7 | FPOL | • Cartesian coordinates | X,Y |
| 8 | Circular arc FC | • Direction of rotation<br>• Radius<br>• Cartesian circle center coordinates | DR<br>R<br>CCX, CCY |
| 9 | Straight line FL | • Gradient angle<br>• Auxiliary point outside of a straight line<br>• Distance straight line - aux. point | AN<br>PDX, PDY<br>D |
| 11 | Circular arc FC | • Direction of rotation<br>• Radius<br>• Polar circle center coordinates | DR<br>R<br>CCPA, CCPR |
| 13 | Straight line FL | • Gradient angle<br>• Auxiliary point outside of a straight line<br>• Distance straight line - aux. point | AN<br>PDX, PDY<br>D |
| 15 | Circular arc FC | • Cartesian coordinates of the end point<br>• Direction of rotation<br>• Cartesian circle center coordinates | X, Y<br>DR<br>CCX, CCY |



Downloaded from www.Manualslib.com manuals search engine

**Example 3 for exercise in FK free contour programming**

**Part program**

```
0   BEGIN PGM FKEXAMP3 MM
1   BLK FORM 0.1 Z X+0 Y+0 Z–20
2   BLK FORM 0.2 X+100 Y+100 Z+0
3   TOOL DEF 1 L+0 R+2
4   TOOL CALL 1 Z S100
5   L Z+100 R0 F MAX M6
6   APPR LN X+0 Y+10 Z-10 LEN+20
    RR F100 M3
7   FL X+90.65 PDX+75 PDY +7.5 D+2.5
8   FSELECT 1
9   FL IAN–135
10  FC DR+ R12.7 CCX+84.3 CCY+16.35
11  FLT PAR7
12  FSELECT 2
13  FCT DR –R10
14  FLT
15  FCT DR+ R7.94 CCX+76.2 ICCY+44.45
    RCCY10
16  FLT PAR14
17  FCT DR+ R12.7 CCX+12.7 CCY+22.7
18  FLT X+0 Y+10
19  DEP LN LEN+15 F100
20  L Z+100 F MAX M2
21  END PGM FKEXAMP3 MM
```

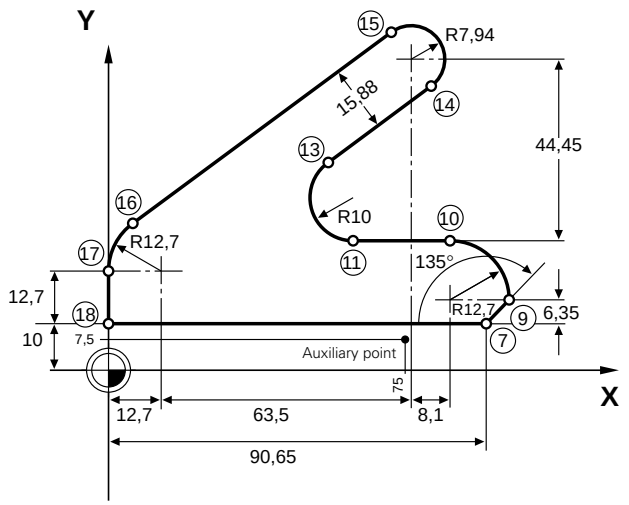


| Program block | Contour element | Known data | FK input |
|---|---|---|---|
| 7 | Straight line FL | • Cartesian X coordinate of the straight-line end point<br>• Auxiliary point outside of the straight line<br>• Distance between straight line and auxiliary point | X<br>PDX, PDY<br>D |
| 9 | Straight line FL | • Gradient angle relative to reference axis | IAN |
| 10 | Circular arc FC | • Direction of rotation<br>• Radius<br>• Cartesian coordinates of circle center | DR<br>R<br>CCX, CCY |
| 11 | Straight line FLT | • Parallel to element from block 7 | PAR N |
| 13 | Circular arc FCT | • Direction of rotation<br>• Radius | DR<br>R |
| 14 | Straight line FLT | • None | |
| 15 | Circular arc FCT | • Direction of rotation<br>• Radius<br>• Cartesian coordinates of circle center | DR<br>R<br>CCX, CCY |
| 16 | Straight line FLT | • Parallel to element from block 14 | PAR N |
| 17 | Circular arc FCT | • Direction of rotation<br>• Radius<br>• Cartesian coordinates of circle center | DR<br>R<br>CCX, CCY |
| 18 | Straight line FLT | • Cartesian coordinates of a straight-line end point | X, Y |



Downloaded from www.Manualslib.com manuals search engine

## 5.7 M Functions for Contouring Behavior and Coordinate Data

The following miscellaneous functions enable you to change the TNC's standard contouring behavior in certain situations:

- Smoothing corners
- Inserting rounding arcs between straight lines at non-tangential transitions
- Machining small contour steps
- Machining open contour corners
- Entering machine-referenced coordinates

### Smoothing corners: M90

**Standard behavior – without M90**

At angular transitions such as internal corners and contours with R0, the TNC stops the axes briefly.

Advantages:

- Reduces wear on the machine
- High definition of corners (outside)

**Note:**

In program blocks with radius compensation (RR/RL) at external corners the TNC automatically inserts a transition arc.

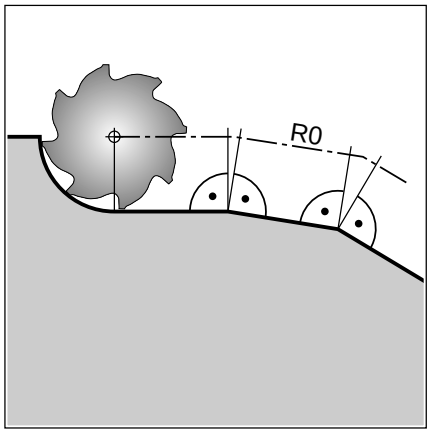


Fig. 5.51: Standard contouring behavior at R0 without M90

**Smoothing corners with M90**

The tool moves at corners with constant speed.

Advantages:

- Provides a smoother, more continuous surface
- Reduced machining time

Example application:
Surfaces consisting of several straight line segments.

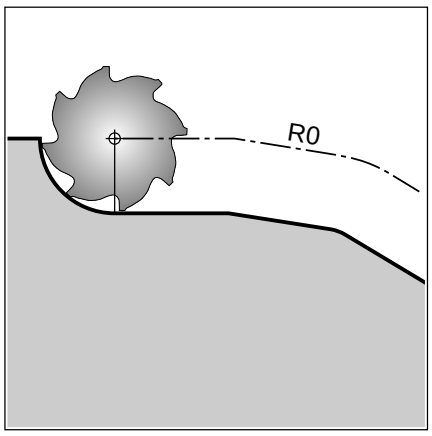


Fig. 5.52: Contouring behavior at R0 with M90

**Duration of effect**

The miscellaneous function M90 is effective only in the blocks in which it is programmed. Operation with servo lag must be active.

A limit value can be set in machine parameter MP7460 (see page 12-12) below which the tool will move at constant feed rate (valid for operation both with servo lag and with feed precontrol). This value is valid regardless of M90.



Downloaded from www.Manualslib.com manuals search engine

## Machining small contour steps: M97

### Standard behavior – without M97

The TNC inserts a transition arc at outside corners. At very short contour steps this would cause the tool to damage the contour. In such cases the TNC interrupts the program run and shows the error message TOOL RADIUS TOO LARGE.

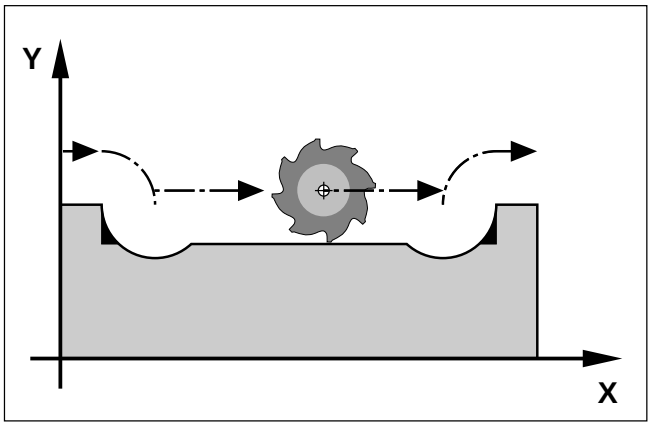


Fig. 5.53: Standard contouring behavior without M97 if the block were executed as programmed

### Machining contour steps with M97

The TNC calculates the contour intersection Ⓢ (see figure) of the contour elements – as at inside corners – and moves the tool over this point. M97 is programmed in the same block as the outside corner point.

### Duration of effect

The miscellaneous function M97 is effective only in the blocks in which it is programmed.

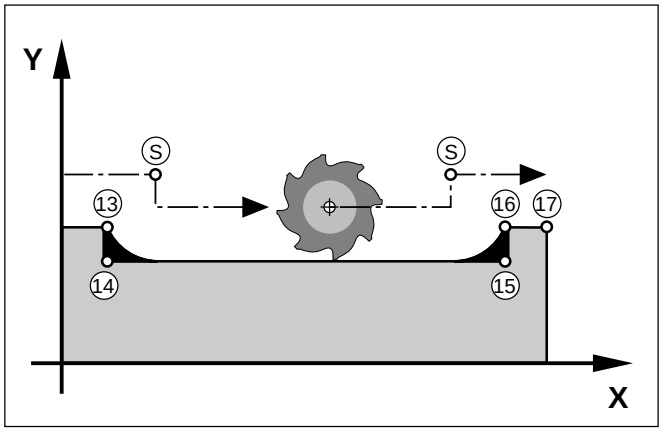


Fig. 5.54: Contouring behavior with M97

A contour machined with M97 is less complete than one without. You may wish to rework the contour with a smaller tool.

### Program example

```
.
.
.
5    TOOL DEF L ... R+20 ..... Large tool radius
.
.
.
13   L X ... Y ... R.. F .. M97 ..... Move to contour point 13
14   L IY–0.5 .... R .. F.. ..... Machine the small contour step 13-14
15   L IX+100 ... ..... Move to contour point 15
16   L IY+0.5 ... R .. F.. M97 ..... Machine the small contour step 15-16
17   L X .. Y ... ..... Move to contour point 17
.
.
.
```

The outer corners are programmed in blocks 13 and 16: these are the blocks in which you program M97.



Downloaded from www.Manualslib.com manuals search engine

## Machining open corners: M98

### Standard behavior – without M98

The TNC calculates the intersections Ⓢ of the radius-compensated tool paths and changes traverse direction at these points. If the corners are open on one side, however, machining is incomplete.

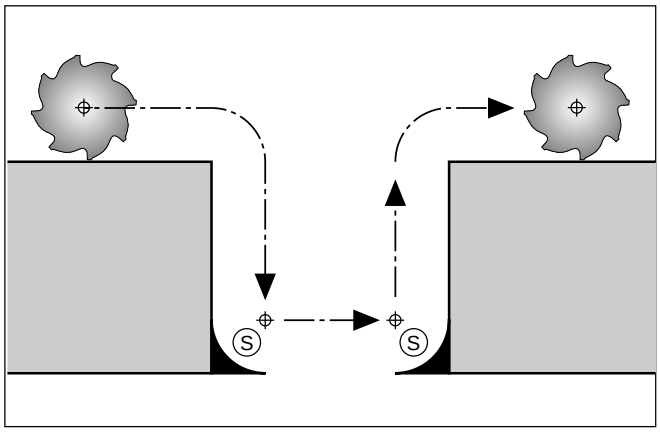


Fig. 5.55: Path without M98

### Machining open corners with M98

With the miscellaneous function M98 the TNC temporarily suspends radius compensation to ensure that both corners are completely machined.

### Duration of effect

The miscellaneous function M98 is effective only in the blocks in which it is programmed.

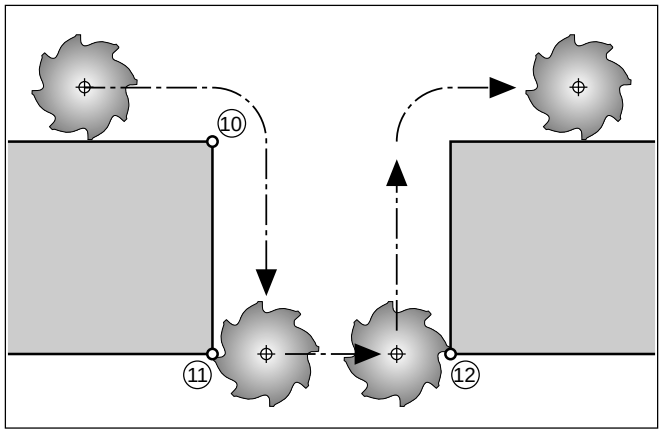


Fig. 5.56: Path with M98

### Program example

```
.
.
.
10  L X ... Y ... RL F .. ..... Move to contour point 10
11  L X .. IY–.. ... M98 ..... Machine contour point 11
12  L IX + .. ... ..... Move to contour point 12
.
.
.
```



Downloaded from www.Manualslib.com manuals search engine

## Programming machine-referenced coordinates M91/M92

### Standard setting

Coordinates are referenced to the workpiece datum (see page 1-13).

### Scale reference point

The position feedback scales are provided with one or more reference marks. Reference marks are used to indicate the position of the scale reference point. If the scale has only one reference mark, its position is the scale reference point. If the scale has several – distance-coded – reference marks, then the scale reference point is indicated by the left-most reference mark (at the beginning of the measuring range).

### Machine zero – miscellaneous function M91

The machine zero point is required for the following tasks:

- Defining the limits of traverse (software limit switches)
- Moving to machine-referenced positions (e.g. tool-change position)
- Setting the workpiece datum

In the machine parameters the machine tool builder defines the distance for each axis from the scale reference point to the machine zero point.

If you want the coordinates in a positioning block to be referenced to the machine zero point, end the block with the miscellaneous function M91.

Coordinates that are referenced to the machine zero point are indicated in the display with REF.

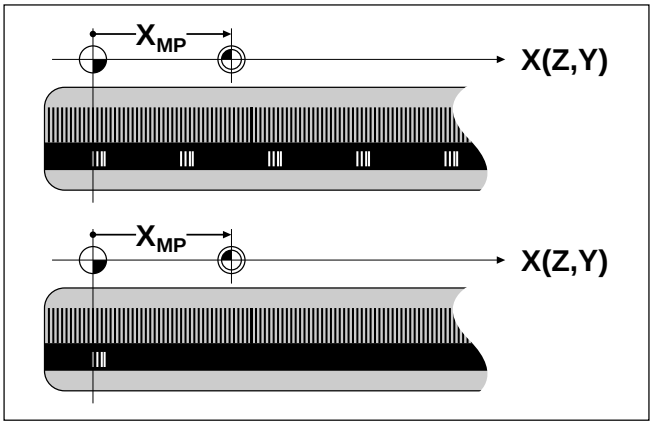


Fig. 5.57: Scale reference point ⌖ and machine zero ⌖ on scales with one or several reference marks

### Machine datum – miscellaneous function M92

In addition to the machine zero point, the machine tool builder can define another machine-referenced position, the machine datum.

The machine tool builder defines the distance for each axis from the machine zero to the machine datum.

If you want the coordinates in a positioning block to be referenced to the machine datum, end the block with the miscellaneous function M92.

Radius compensation remains active in blocks that are programmed with M91 or M92. The tool length is not compensated.



Downloaded from www.Manualslib.com manuals search engine

**Workpiece datum**

The user enters the coordinates of the datum for workpiece machining in the MANUAL OPERATION mode (see page 2-7).

If you want the coordinates to always be referenced to the machine zero point, you can inhibit datum setting for one or more axes.

If datum setting is inhibited for all axes, the TNC no longer displays the DATUM SET soft key in the MANUAL OPERATION mode.

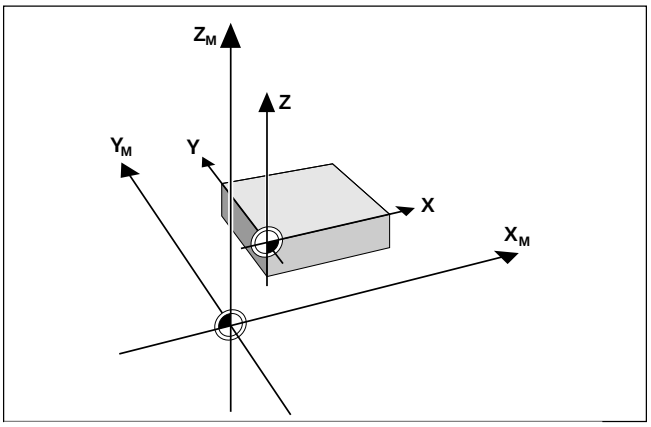


Fig. 5.58: Machine zero and workpiece zero

## Feed rate factor for plunging movements: M103 F...

**Standard behavior – without M103 F...**

The TNC moves the tool at the last programmed feed rate, regardless of the direction of movement.

**Reducing feed rate during plunging – with M103 F...**

The TNC reduces the feed rate for movement in the negative direction of the tool axis to a given percentage of the last programmed feed rate:

FZMAX = FPROG * F%

FZMAX: Maximum feed fate in the negative tool axis direction

FPROG: Last programmed feed rate

F%: Programmed factor behind M103 in %

**Duration of effect**

M103 F... is cancelled by programming M103 without a factor.

Example: Enter a feed rate for plunging 20% of the feed rate in the plane

| | Actual feed rate (mm/min) at 100% override |
|---|---|
| . | |
| . | |
| . | |
| L·X+20 Y+20 RL F500 M103 F20 | 500 |
| L Y+50 | 500 |
| L IZ–2.5 | 100 |
| L IY+5 IZ–5 | 316 |
| L IX+50 | 500 |
| L Z+5 | 500 |

M103 F... is activated with machine parameter 7440 (see page 12-12).



Downloaded from www.Manualslib.com manuals search engine

## Feed rate at circular arcs: M109/M110/M111

### Standard behavior – M111

The programmed feed rate refers to the center of the tool path.

### Constant contouring speed at circular arcs (feed rate increase and decrease) – M109

The TNC reduces the feed rate for circular arcs at inside contours such that the feed rate at the tool cutting edge remains constant. At an outside contour the feed rate for circular arcs is correspondingly increased.

### Constant contouring speed at circular arcs (feed rate decrease only) – M110

The TNC reduces the feed rate for circular arcs only at inside contours. At outside contours the feed rate remains unchanged.

## Insert rounding arc between straight lines: M112 T... A...

### Standard behavior – without M112 T... A...

A contour consisting of many short straight lines is normally machined such that the corners are cut as exactly as possible. When executing programs without tool radius compensation, the feed rate is therefore decreased to zero at corners.

### Insert rounding arc between straight lines – with M112 T... A...

The TNC inserts an uncompensated rounding radius between two straight lines. The size of the rounding radius depends on:

- the permissible deviation from the programmed contour entered for T (value entered in mm; if no deviation is entered, the TNC assumes the permissible deviation to be infinite)
- the lengths of the two straight line segments between which the rounding arc is to be inserted
- the programmed feed rate (override setting 100%) and the circular acceleration (defined by the machine tool builder through machine parameters).

From these three criteria, the TNC calculates three rounding arcs and inserts the arc with the smallest radius. If necessary, the contouring feed rate will automatically be reduced to comply with the programmed tolerance. If you have entered a tolerance angle A, the TNC only takes the programmed feed rate into account for calculation of the rounding arc if the direction angle is greater than the programmed tolerance angle.

The permissible deviation T should be less than the programmed distance between points.

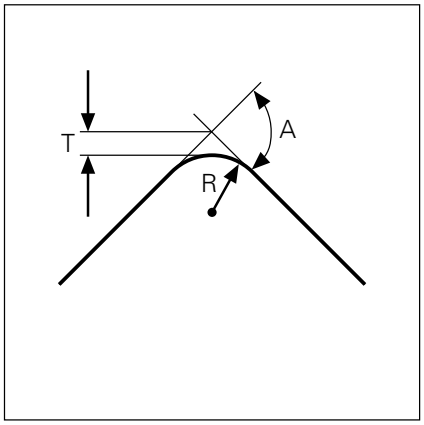

Fig. 5.59 Permissible deviation T from the programmed contour

*NC block: L X+123.723 Y+25.491 R0 FMAX M112 T0.005 A45*

### Parameter programming

You can also define T through Q parameters.

### Duration of effect

M112 T... A... is effective during operation with feed precontrol as well as with servo lag. To cancel M112 T..., enter M113.



Downloaded from www.Manualslib.com manuals search engine

## Ignore points for calculating the rounding arc with M112: M124 T...

### Standard behavior – without M124 T...

All existing points are taken into account for calculating the rounding arc between two straight lines with M112.

### Ignore points – with M124 T...

Particularly when machining digitized 3D surfaces, the distance between contour points at sections with sharp changes in direction may be too small to insert a rounding arc with M112. With the miscellaneous function M124 T..., the TNC filters out such points before calculating the rounding arc. M124 T... is programmed by entering a minimum distance between points for T.

If the distance between two points is less than the programmed value, the TNC automatically ignores the second point and uses the next contour point for calculating the rounding arc with M112.

*NC block: L X+123.723 Y+25.491 R0 FMAX M124 T0.01*

### Parameter programming

You can also define T through Q parameters.

### Duration of effect

M124 T... is effective at the start of block and only if M112 T... A... is active. M124 T... is cancelled by M113.

## Shorter-path traverse of rotary axes : M126

### Standard behavior — without M126

The TNC moves a rotary axis whose display has been reduced to a value less than 360° as follows:

| Actual position | Nominal position | Actual path of traverse |
|---|---|---|
| 350° | 10° | –340° |
| 10° | 340° | +330° |

### Shorter-path traverse of rotary axes — with M126

The TNC moves a rotary axis whose display has been reduced to a value less than 360° as follows:

| Actual position | Nominal position | Actual path of traverse |
|---|---|---|
| 350° | 10° | +20° |
| 10° | 340° | –30° |

*NC block: L C+10 A+340 R0 F500 M126*

### Duration of effect

M126 is effective at the start of block. M126 is cancelled by M127 or automatically at the end of the program.



Downloaded from www.Manualslib.com manuals search engine

## Automatic compensation of machine geometry when working with tilted axes: M114 (not on TNC 407)

### Standard behavior – without M114

The TNC moves the tool to the positions given in the part program. The tool offset resulting from a tilted axis and the machine geometry must be calculated by a postprocessor.

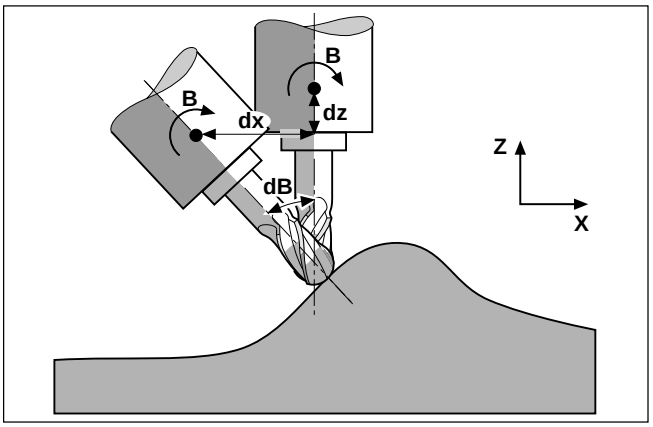


Fig. 5.60: Offsetting the tool datum while swivelling the tool

### Automatically compensating the machine geometry – with M114

The TNC compensates the tool offset resulting from positioning with tilted axes. It calculates a 3D length compensation. The radius compensation must be calculated by a CAD system or by a postprocessor. A programmed radius compensation (RL or RR) results in the error message ILLEGAL NC BLOCK.

If you write the NC program with a postprocessor, it therefore need not calculate the machine geometry.

If the tool length compensation is calculated by the TNC, the programmed feed rate refers to the point of the tool, otherwise it refers to the tool datum.

If you are working with a controlled swivel head you can interrupt the program and change the position of the swivel axis (e.g. with the handwheel). With the RESTORE POS. AT N function (see "Mid-program startup," page 3-8) you can return the tool its previous machining position. The TNC then automatically calculates the new position of the swivel axis.

### Duration of effect

M114 is cancelled by M115 or by an END PGM block.

The machine geometry must be entered in the machine parameters 7510 and following by the machine tool builder.

## Feed rate in mm/min on rotary axes A, B, C: M116

### Standard behavior – without M116

The TNC interprets the programmed feed rate in a rotary axis in degrees/min. The contouring feed rate therefore depends on the distance from the tool center to the center of the rotary axis. The larger this distance becomes, the greater the contouring feed rate is.

### Feed rate in mm/min on rotary axes – with M116

The TNC interprets the programmed feed rate in a rotary axis in mm/min. The contouring feed rate does not depend on the distance from the tool center to the center of the rotary axis.

### Duration of effect

M116 is effective until the program ends (END PGM block) and is then automatically cancelled.

The machine geometry must be entered in the machine parameters 7510 and following by the machine tool builder.



Downloaded from www.Manualslib.com manuals search engine

## Reducing display of the rotary axis to a value less than 360°: M94

**Standard behavior – without M94**

The TNC moves the tool from the current angular value to the programmed angular value.

Example:
| | |
|---|---|
| Current angular value: | 538° |
| Programmed angular value: | 180° |
| Actual path of traverse: | –358° |

**Reducing display of the rotary axis to a value less than 360° – with M94**

At the start of block, the TNC reduces the current angular value to a value less than 360° and then moves the tool to the programmed value. If several rotary axes are active, the miscellaneous function M94 will reduce the displayed values of all rotary axes. If you enter a specific rotary axis after M94, the TNC will only reduce the display for this axis.

Example:

| | |
|---|---|
| L M94 | Reduce the displayed values of all active rotary axes |
| L M94 C | Reduce the displayed value of the C axis only |
| L C+180 FMAX M94 | Reduce the displayed values of all rotary axes and then move the tool in the C axis to the programmed value. |

Current angular value: 538°
Programmed angular value: 180°
Actual path of traverse: +2°

**Duration of effect**

M94 is effective at the start of block and only in the blocks in which it is programmed.

## Superimposing handwheel positioning during program run: M118 X... Y... Z...

**Standard behavior – without M118**

In the program run modes, the TNC moves the tool as defined in the part program.

**Superimposing handwheel positioning – with M118 X... Y... Z...**

M118 permits manual corrections by handwheel during program run. The range of this superimposed movement is entered behind M118 (in mm) in axis-specific values for X, Y and Z.

**Duration of effect**

M118 X... Y... Z... is cancelled by entering M118 without the values X, Y and Z.

Example: You wish to be able to use the handwheel during program run to move the tool in the working plane X/Y by ±1 mm.

*Example NC block: L X+0 Y+38.5 RL F125 M118 X1 Y1*

M118 X.. Y.. Z.. is also effective in the POSITIONING WITH MDI mode.



Downloaded from www.Manualslib.com manuals search engine

## 5.8 M Functions for Laser Cutting Machines

The TNC can control the cutting efficiency of a laser by transferring voltage values through the S-analog output. Apart from the positioning blocks you can also influence laser efficiency through the miscellaneous functions M200 to M204.

### Output the programmed voltage directly: M200 V...

The TNC outputs the value programmed after M200 V... as voltage.

**Input range**

0 to 9.999 V

**Duration of effect**

M200 V... is effective at the start of block and remains in effect until a new voltage is output through M200, M201, M202, M203 or M204.

### Output voltage as a function of distance: M201 V...

The TNC outputs the voltage in dependence on the distance to be covered. Depending on the active voltage, the TNC increases or decreases the voltage linearly to the value programmed after M210 V... .

**Input range**

0 to 9.999 V

**Duration of effect**

M201 V... is effective at the start of block and remains in effect until a new voltage is output through M200, M201, M202, M203 or M204.

### Output voltage as a function of speed: M202 FNR.

The TNC outputs the voltage as a function of speed. In the machine parameters, the machine tool builder defines up to three characteristic curves in which specific feed rates are assigned to specific voltages. Use miscellaneous function M202 FNR to select the curve from which the TNC is to determine the output voltage.

**Input range**

1 to 3

**Duration of effect**

M202 FNR. is effective at the start of block and remains in effect until a new voltage is output through M200, M201, M202, M203 or M204.



Downloaded from www.Manualslib.com manuals search engine

## Output voltage as a function of time (time-dependent ramp): M203 V... TIME...

The TNC output the voltage as a function of time. Depending on the active voltage the TNC increases or decreases the voltage linearly to the value programmed after V... within the time programmed for TIME.

### Input range

Voltage V: 0 to 9.999 volts
TIME: 0 to 1.999 seconds

### Duration of effect

M203 V... TIME... is effective at the start of block and remains in effect until a new voltage is output through M200, M201, M202, M203 or M204.

## Output voltage as a function of time (time-dependent pulse): M204 V... TIME...

The TNC outputs the voltage programmed after V... as a pulse. The duration of the pulse is defined by TIME.

### Input range

Voltage V: 0 to 9.999 volts
TIME: 0 to 1.999 seconds

### Duration of effect

M204 V... TIME... is effective at the start of block and remains in effect until a new voltage is output through M200, M201, M202, M203 or M204.



Downloaded from www.Manualslib.com manuals search engine

## 5.9 Positioning with Manual Data Input (MDI)

In the POSITIONING WITH MDI mode you can:

- Program the system file $MDI.H (or $MDI.I) for immediate execution.
- Generate contour point tables for defining the digitizing range.

### Programming the system file $MDI

**Applications:**

- Pre-positioning
- Face milling

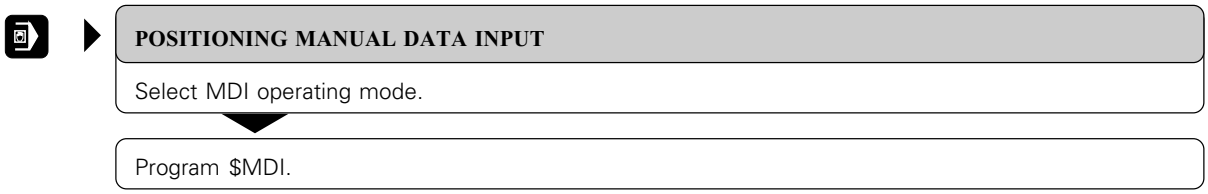


**To execute the system file $MDI**

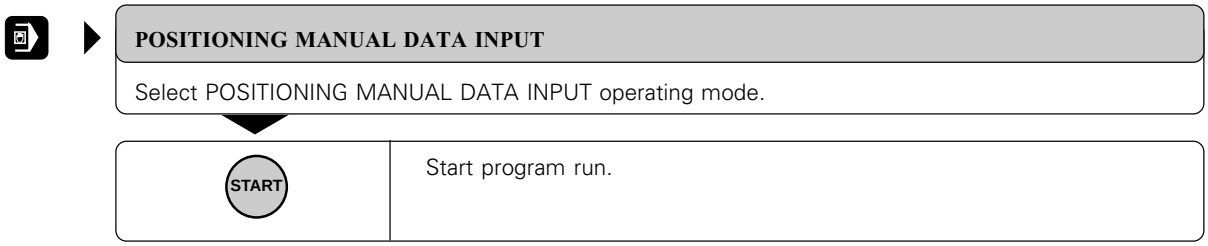


The system file $MDI must not contain a PGM CALL block or a cycle call.



Downloaded from www.Manualslib.com manuals search engine

**Example application**

Correcting workpiece misalignment on machines with rotary tables

Make a basic rotation with the 3D touch probe; write down the ROTATION ANGLE and remove the basic rotation again.

- Change the operating mode

**POSITIONING MANUAL DATA INPUT**

Open the system file $MDI.

- Program the rotation

**COORDINATES ?**

- Select the rotary axis.
- Enter the ROTATION ANGLE that you previously wrote down.
- Enter the FEED RATE.

Close the block.

Start the program: the rotary axis corrects the misalignment.



Downloaded from www.Manualslib.com manuals search engine

## Contour point tables for defining the digitizing range

If you are using the measuring touch probe system, you can create point tables to define the contour of the desired digitizing range in the POSITIONING WITH MDI mode of operation. You can enter the points in the table by:

- Capturing the points by teach-in programming, or
- Having the TNC generate the points automatically.

- You can enter up to 893 points in a contour point table.
- The digitizing range is defined by straight lines connecting the programmed points. The last point in the table is again connected to the first point in the table by a straight line.

### Capturing points manually by teach-in programming

After inserting the measuring touch probe into the spindle and locking it mechanically, press the PNT soft key to select a point table:

PNT

**FILE NAME =**

Enter any desired file name.

**MM=ENT / INCH=NOENT**

ENT

Indicate whether the dimensions will be entered in millimeters or inches.

PROBE MAN

Capture the points manually.

F

If necessary, enter the feed rate at which the measuring touch probe should react to a stylus deflection.

**FEED RATE = 200**

e.g. 7 5 0 END

Enter the feed rate, for example 750 mm/min.

Move the touch probe to the first point of the digitizing range to be scanned by deflecting the stylus manually in the desired direction.

Press the soft key for actual position capture. The TNC enters the X, Y and Z coordinates in the point table. Only the coordinates of the probing plane are evaluated for determining the digitizing range.

Move the touch probe to the next contour point of the desired range and capture the actual position. Repeat this process until the entire digitizing range has been defined.



Downloaded from www.Manualslib.com manuals search engine

**To generate the points automatically**

After inserting the measuring touch probe into the spindle and locking it mechanically, press the PNT soft key to select a contour point table:

PNT

**FILE NAME =**

Enter any desired file name.

**MM=ENT / INCH=NOENT**

ENT

Indicate whether the dimensions will be entered in millimeters or inches.

PROBE AUTO

Capture the points automatically.

F

If necessary, enter the feed rate at which the measuring touch probe should react to a stylus deflection.

**FEED RATE = 200**

e.g. 7 5 0 END

Enter the feed rate, for example 750 mm/min.

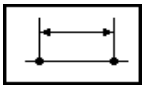

Define the point interval at which the TNC should store the points while you move the touch probe manually around the contour of the desired digitizing range.

**POINT INTERVAL = 5**

e.g. 5 END

Enter the point interval, for example 5 mm.
Maximum point interval: 5 mm.

START

Start automatic capture.

Move the touch probe around the entire contour of the digitizing range to be scanned by deflecting the stylus manually in the desired direction. The TNC automatically generates the points at the programmed probe point interval.

STOP

Stop automatic capture.



Downloaded from www.Manualslib.com manuals search engine

# 6 Subprograms and Program Section Repeats

Subprograms and program section repeats enable you to program a machining sequence once and then run it as often as you desire.

**Labels**

Subprograms and program section repeats are marked by labels.

A label is identified by a number between 0 and 254. Each label (except for label number 0) can be used only once with LABEL SET in a program.

LABEL 0 marks the end of a subprogram.

## 6.1 Subprograms

### Principle

The program is executed up to the block in which a subprogram in called via CALL LBL (①).

The subprogram is then executed from beginning to end (②). The subprogram end is marked with LBL 0.

The main program is then resumed from the block after the subprogram call (③).

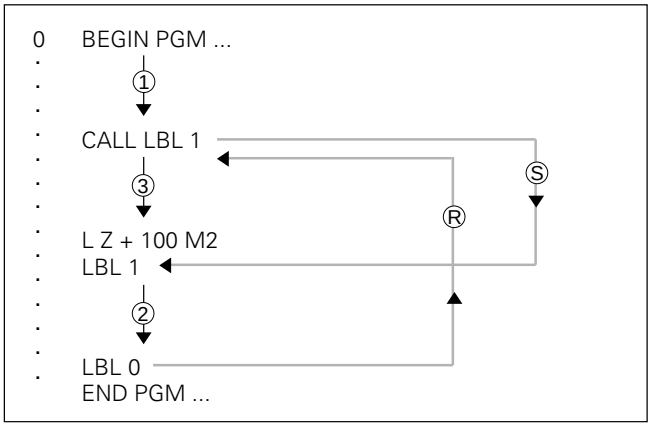


Fig. 6.1: Flow diagram for a subprogram run; Ⓢ = jump Ⓡ = return jump

### Operating limits

- A main program can hold up to 254 subprograms.
- Subprograms can be called in any sequence and as often as desired.
- A subprogram cannot call itself.
- Subprograms should be written at the end of the main program (behind the block with M2 or M30).
- If subprograms are located before the block with M02 or M30, they will be executed at least once, even if they are not called.



Downloaded from www.Manualslib.com manuals search engine

## Programming and calling subprograms

**Mark the beginning:**

| LBL SET | LABEL NUMBER ? | |
|---|---|---|
| | e.g. 5 ENT | The subprogram begins with label number 5. |

*Resulting NC block: LBL 5*

**Mark the end:**

A subprogram always ends with LABEL 0.

| LBL SET | LABEL NUMBER ? | |
|---|---|---|
| | 0 ENT | End of subprogram |

*Resulting NC block: LBL 0*

**Call the subprogram:**

A subprogram is called by its label number.

| LBL CALL | LABEL NUMBER ? | |
|---|---|---|
| | e.g. 5 ENT | Calls the subprogram behind LBL 5. |
| | **REPEAT REP ?** | |
| | NO ENT | The program section is a subprogram: no repetitions. |

*Resulting NC block: CALL LBL 5*

The command CALL LBL 0 is not permitted, because label 0 is used only to mark the end of a subprogram.



Downloaded from www.Manualslib.com manuals search engine

**Example: Group of four holes at three different locations**

The holes are drilled with cycle 1 PECKING. You enter the total hole depth, setup clearance, feed rate etc. once in the cycle. You can then call the cycle with the miscellaneous function M99 (see page 8-3).

Coordinates of the first hole in each group:

| | | |
|---|---|---|
| Group ① | X = 15 mm | Y = 10 mm |
| Group ② | X = 45 mm | Y = 60 mm |
| Group ③ | X = 75 mm | Y = 10 mm |

Spacing of holes: IX = 20 mm
IY = 20 mm

Total hole depth: Z = 10 mm

Hole diameter: Ø = 5 mm

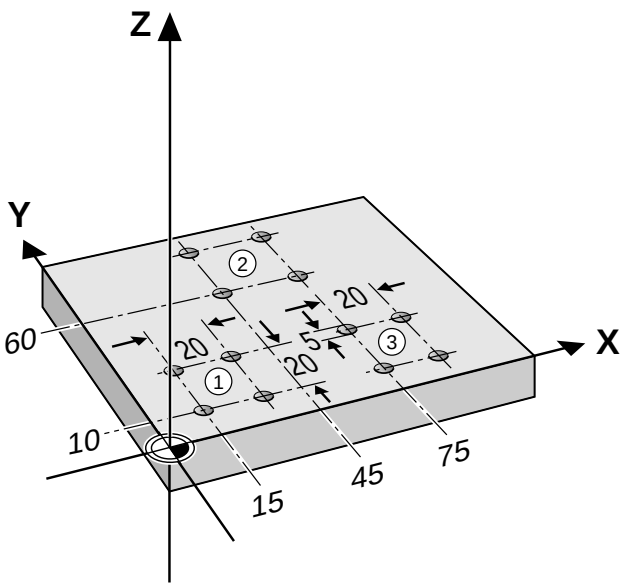


**Part program**

```
0  BEGIN PGM GROUPS MM
1  BLK FORM 0.1 Z X+0 Y+0 Z–20
2  BLK FORM 0.2 X+100 Y+100 Z+0
3  TOOL DEF 1 L+0 R+2.5
4  TOOL CALL 1 Z S1000
5  CYCL DEF 1.0 PECKING
6  CYCL DEF 1.1 SET UP –2
7  CYCL DEF 1.2 DEPTH -10
8  CYCL DEF 1.3 PECKG–10
9  CYCL DEF 1.4 DWELL 0
10 CYCL DEF 1.5 F100
```

} Cycle definition PECKING (see page 8-5)

```
11 L Z+100 F MAX
12 L X+15 Y+10 R0 F MAX M6 ..... Move to hole group 1, insert tool
13 L Z+2 F MAX M3 ..... Pre-position in the infeed axis
14 CALL LBL 1 ..... Subprogram call (with block 14 the subprogram is executed once).
15 L X+45 Y+60 F MAX ..... Move to hole group 2
16 CALL LBL 1 ..... Subprogram call
17 L X+75 Y+10 F MAX ..... Move to hole group 3
18 CALL LBL 1 ..... Subprogram call
19 L Z+100 F MAX M2 ..... Retract tool; return to program block 1 and end main program (M2). The subprogram is entered after M2.
20 LBL 1 ..... Begin the subprogram
21 L M99 ..... Execute the peck drilling cycle for the first hole in the group
22 L IX+20 F MAX M99 ..... Move to the position for the second hole and drill
23 L IY+20 F MAX M99 ..... Move to the position for the third hole and drill
24 L IX–20 F MAX M99 ..... Move to the position for the fourth hole and drill
25 LBL 0 ..... End the subprogram
26 END PGM GROUPS MM
```



Downloaded from www.Manualslib.com manuals search engine

## 6.2 Program Section Repeats

Program section repeats, like subprograms, are identified with labels.

### Principle

The program is executed up to the end of the labeled program section (① and ②), i.e. up to the block with CALL LBL.

Then the program section between the called LBL and the label call is repeated the number of times entered after REP in the CALL LBL command (③, ④).

After the last repetition the program is then continued (⑤).

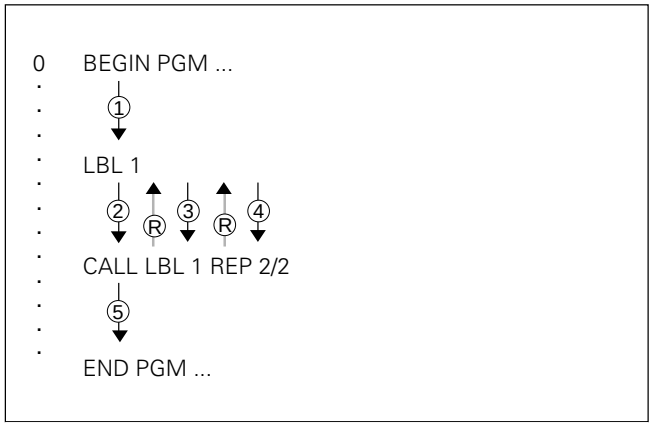


Fig. 6.2: Flow diagram for a program section repeat; Ⓡ = return jump

### Programming notes

- A program section can be repeated up to 65 534 times in succession.
- Behind the slash after REP the TNC counts the number of repetitions yet to be run.
- Altogether, the program section is always executed once more than the number of programmed repeats.

### Programming and calling a program section repetition

**Mark the beginning**

LBL SET ▶

| LABEL NUMBER ? | |
|---|---|
| e.g. 7 ENT | Repeat the program section beginning with LABEL 7. |

*Resulting NC block: LBL 7*

**Call the label and specify the number or repetitions**

Enter the number of desired repetitions in the block that calls the label.
This is also the block that ends the program section.

LBL CALL ▶

| LABEL NUMBER ? | |
|---|---|
| e.g. 7 ENT | Execute the program section beginning with LABEL 7. |

| REPEAT REP ? | |
|---|---|
| e.g. 1 0 ENT | Repeat the program section from LABEL 7 to this block 10 times. The labeled program section will therefore be executed a total of 11 times. |

*Resulting NC block: CALL LBL 7 REP 10/10*



Downloaded from www.Manualslib.com manuals search engine

**Example for exercise: Row of holes parallel to the X axis**

| | | | |
|---|---|---|---|
| Coordinates of the first hole: | X | = | 5 mm |
| | Y | = | 10 mm |
| Spacing between holes: | IX | = | 15 mm |
| Number of holes: | N | = | 6 |
| Depth: | Z | = | 10 |
| Hole diameter: | Ø | = | 5 mm |

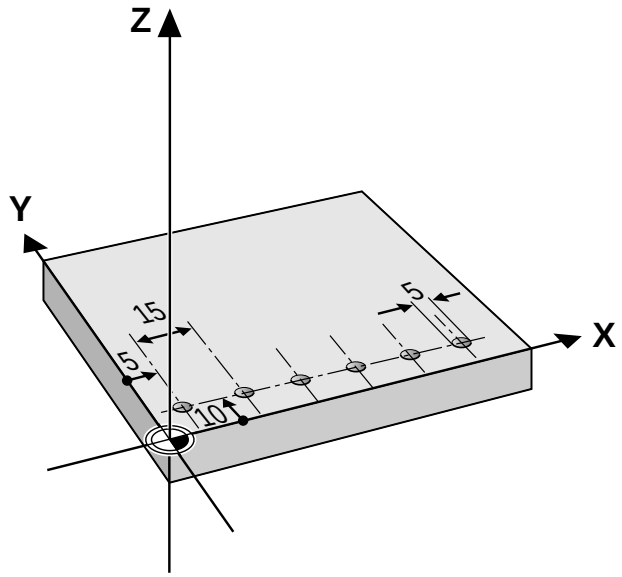


**Part program**

```
0  BEGIN PGM ROW MM
1  BLK FORM 0.1 Z X+0 Y+0 Z–20
2  BLK FORM 0.2  X+100 Y+100 Z+0
3  TOOL DEF 1 L+0 R+2.5
4  TOOL CALL 1 Z S1000
5  L Z+100 R0 F MAX M6
6  L X–10 Y+10 Z+2 F MAX M3 ..... Pre-position in the negative X direction by the hole spacing

7  LBL 1 ..... Beginning of the program section to be repeated
8  L IX+15 F MAX
9  L Z–10 F100
10 L Z+2 F MAX ..... Move to the hole position, drill, retract
11 CALL LBL 1 REP 5/5 ..... Call LABEL 1; Repeat the program section between block 7
                            and block 11 five times (for 6 holes!)
12 L Z+100 R0 F MAX M2
13 END PGM ROW MM
```



Downloaded from www.Manualslib.com manuals search engine

**Example for exercise: Milling without radius compensation using program section repeats**

Machining sequence:

- Upward milling direction
- Machine the area from X=0 to 50 mm (program all X coordinates with the tool radius subtracted) and from Y=0 to 100 mm : LBL 1
- Machine the area from X=50 to X=100 mm (program all X coordinates with the tool radius added) and from Y=0 to 100 mm : LBL 2
- After each upward pass, the tool is moved by an increment of +2.5 mm in the Y axis.

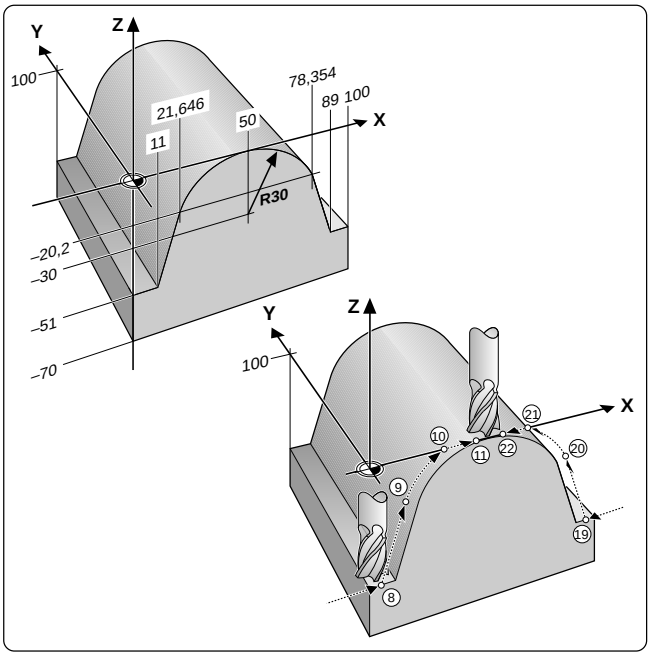


The illustration to the right shows the block numbers containing the end points of the corresponding contour elements.

**Part program:**

```
0   BEGIN PGM BUMP MM
1   BLK FORM 0.1 Z X+0 Y+0 Z–70 ..... Note: the blank form has changed
2   BLK FORM 0.2 X+100 Y+100 Z+0
3   TOOL DEF 1 L+0 R+10
4   TOOL CALL 1 Z S1000
5   L X–20 Y–1 R0 FMAX M3
6   LBL 1                                  }
7   L Z–51 F MAX                           }
8   L X+1 F100                             }
9   L X+11.646 Z–20.2                      }  Program section repeat 1: machining from
10  CT X+40 Z+0                            }  X=0 to 50 mm and from Y=0 to 100 mm
11  L X+41                                 }
12  L Z+10 F MAX                           }
13  L X–20 IY+2.5                          }
14  CALL LBL 1 REP40/40                    }
15  L Z+20 F MAX                           }  Retract, re-position
16  L X+120 Y–1                            }
17  LBL 2                                  }
18  L Z–51 F MAX                           }
19  L X+99 F100                            }
20  L X+88.354 Z–20.2                      }  Program section repeat 2: Machining from X=50 to
21  CT X+60 Z+0                            }  100 mm and from Y=0 to 100 mm
22  L X+59                                 }
23  L Z+10 F MAX                           }
24  L X+120 IY+2.5                         }
25  CALL LBL 2 REP40/40                    }
26  L Z+100 F MAX M2
27  END PGM BUMP MM
```



Downloaded from www.Manualslib.com manuals search engine

## 6.3 Main Program as Subprogram

### Principle

A program is executed (①) up to the block in which another program is called.

Then the other program is run from beginning to end (②).

The first program is then resumed beginning with the block behind the program call (③).

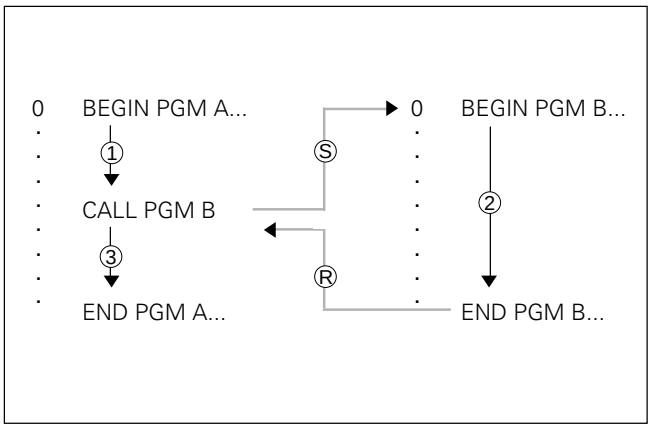


Fig. 6.3: Flow diagram of a main program as subprogram; Ⓢ = jump, Ⓡ = return jump

### Operating limits

- Programs called from an external data medium (e.g., floppy disk) must not contain any subprograms or program section repeats.
- No labels are needed to call main programs as subprograms.
- The called program must not contain the miscellaneous functions M2 or M30.
- The called program must not contain a jump into the calling program.

### Calling a main program as a subprogram

PGM CALL ▶ **PROGRAM NAME ?**

Enter the name of the program that you wish to call from this block.

| Function | Soft key |
|---|---|
| call a plain language program | .H |
| call an ISO program | .I |
| call an externally stored program | EXT |

*Resulting NC block: CALL PGM NAME*

- You can also call a main program with cycle 12: PGM CALL (see page 8-53).
- If an ISO program is called, G50, G70 or G71 may not be part of the program name.



Downloaded from www.Manualslib.com manuals search engine

# 6.4 Nesting

Subprograms and program section repeats can be nested in the following variations:

- Subprograms in a subprogram
- Program section repeats in a program section repeat
- Repeating subprograms
- Program section repeats in a subprogram

## Nesting depth

The "nesting depth" is the number of successive levels for which program sections or subprograms can call further program sections or subprograms.

Maximum nesting depth for subprograms: 8

Maximum nesting depth for calling main programs: 4

## Subprogram in a subprogram

**Program layout**

```
      0   BEGIN PGM SPGMN MM
      .   |
      .   ①
      .   ▼
e.g. 17   CALL LBL 1 ............................................ Call the subprogram marked with LBL1
      .   |
      .   ⑤
      .   ▼
e.g. 35   L Z+100 R0 FMAX M2 ............................ Last program block of the main program (with M2)
     36   LBL 1
      .   |
      .   ②
      .   ▼
e.g.. 39  CALL LBL 2
      .   |
      .   ④
      .   ▼
e.g.. 45  LBL 0 ...................................................... End of subprogram 1
     46   LBL 2
      .   |
      .   ③
      .   ▼
e.g. 62   LBL 0 ...................................................... End of subprogram 2
     63   END PGM SPGMN MM ........................... End of main program
```

Subprogram 1 with program call of subprogram 2

Subprogram 2

**Program execution**

1st Step: The main program SPGMN is executed up to block 17.

2nd Step: Subprogram 1 is called and executed up to block 39.

3rd Step: Subprogram 2 is called and executed up to block 62.
End of subprogram 2 and return jump to the subprogram from which it was called.

4th Step: Subprogram 1 is called and executed from block 40 to block 45.
End of subprogram 1 and return jump to the main program SPGMN.

5th Step: Main program SPGMN is executed from block 18 to block 35.
Return jump to block 1 and end of program.

A subprogram ending with a LBL 0 must not be contained in another subprogram.



Downloaded from www.Manualslib.com manuals search engine

**Example for exercise: Groups of four holes (see page 6-4), and with three different tools**

Machining sequence:

Countersinking - Drilling - Tapping

Essential machining data is entered in the fixed cycle 1: PECK DRILLING (see page 8-5) and cycle 2: TAPPING (see page 8-7). The tool moves to the hole groups in a subprogram, while the machining is performed in a second subprogram.

Coordinates of the first hole in each group:

① X = 15 mm Y = 10 mm

② X = 45 mm Y = 60 mm

③ X = 75 mm Y = 10 mm

Spacing between holes: IX = 20 mm IY = 20 mm

Hole data:

| | | |
|---|---|---|
| Countersinking | ZC = 3 mm | Ø = 7 mm |
| Drilling | ZD = 15 mm | Ø = 5 mm |
| Tapping | ZT = 10 mm | Ø = 6 mm |

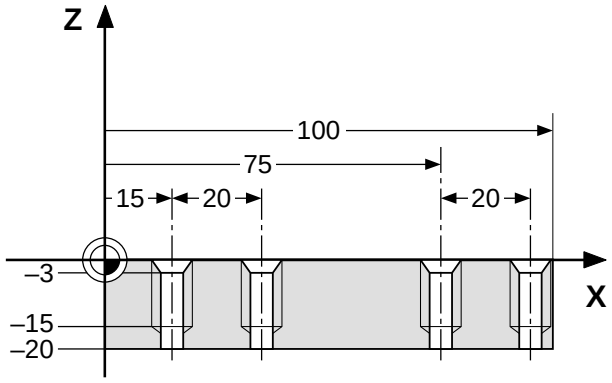


**Part program**

```
0  BEGIN PGM GROUPS2 MM
1  BLK FORM 0.1 Z X+0 Y+0 Z–20
2  BLK FORM 0.2 X+100 Y+100 Z+0
3  TOOL DEF 25 L+0 R+2.5
4  TOOL DEF 30 L+0 R+3
5  TOOL DEF 35 L+0 R+3.5
```
} Tool definition for countersinking (T35), peck drilling (T25) and tapping (T30)

```
6  CYCL DEF 1.0 PECKING
7  CYCL DEF 1.1 SET UP–2
8  CYCL DEF 1.2 DEPTH–3
9  CYCL DEF 1.3 PECKG–3 .....
10 CYCL DEF 1.4 DWELL0
11 CYCL DEF 1.5 F100
12 TOOL CALL 35 Z S 500
```
} Cycle definition PECKING for countersinking

```
13 CALL LBL 1 ..... Call subprogram 1
```

```
14 CYCL DEF 1.0 PECKING
15 CYCL DEF 1.1 SET UP–2
16 CYCL DEF 1.2 DEPTH–25
17 CYCL DEF 1.3 PECKG–6
18 CYCL DEF 1.4 DWELL0
19 CYCL DEF 1.5 F50
20 TOOL CALL 25 Z S 1000
```
} Cycle definition PECKING

```
21 CALL LBL 1 ..... Call subprogram 1
```

```
22 CYCL DEF 2.0 TAPPING
23 CYCL DEF 2.1 SET UP–2
24 CYCL DEF 2.2 DEPTH–15
25 CYCL DEF 2.3 DWELL0
26 CYCL DEF 2.4 F100
27 TOOL CALL 30 Z S 250
```
} Cycle definition TAPPING

```
28 CALL LBL 1 ..... Call subprogram 1
29 L Z+100 R0 FMAX M2 ..... End program, return to block 1
```

Continued...



Downloaded from www.Manualslib.com manuals search engine

```
30  LBL 1
31  L X+15 Y+10 R0 FMAX M3
32  L Z+2 FMAX
33  CALL LBL 2
34  L X+45 Y+60 FMAX
35  CALL LBL 2
36  L X+75 Y+10 FMAX
37  CALL LBL 2
38  LBL 0
39  LBL 2
40  L M99
41  L IX+20 F9999 M99
42  L IY+20 M99
43  L IX–20 M99
44  LBL 0
45  END PGM GROUPS2 MM
```

Move to the first hole position of each group, then call subprogram 2

Machine first hole using cycle call, then move to and machine the other three holes using the same cycle

## Repeating program section repeats

### Program layout

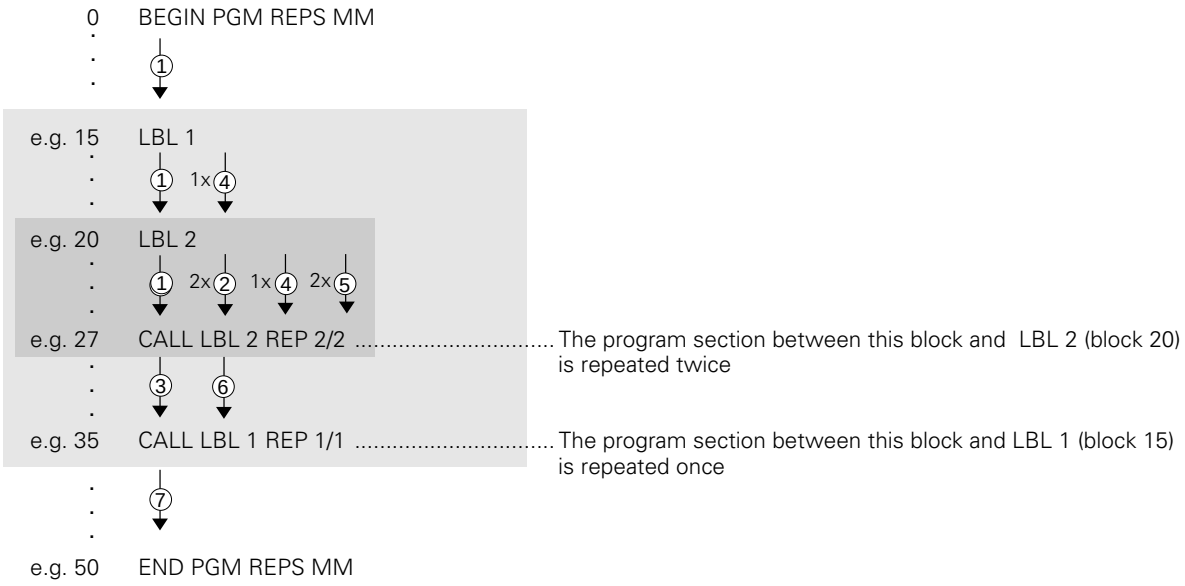


The program section between this block and LBL 2 (block 20) is repeated twice

The program section between this block and LBL 1 (block 15) is repeated once

### Program execution

1st Step: The main program REPS is executed up to block 27.

2nd Step: The program section between block 27 and block 20 is repeated twice.

3rd Step: The main program REPS is executed from block 28 to block 35.

4th Step: The program section from block 35 and block 15 is repeated once.

5th Step: Repetition of the second step within step ④.

6th Step: Repetition of the third step within step ④.

7th Step: The main program REPS is executed from block 36 to block 50, end of program.



Downloaded from www.Manualslib.com manuals search engine

## Repeating a subprogram

**Program layout**

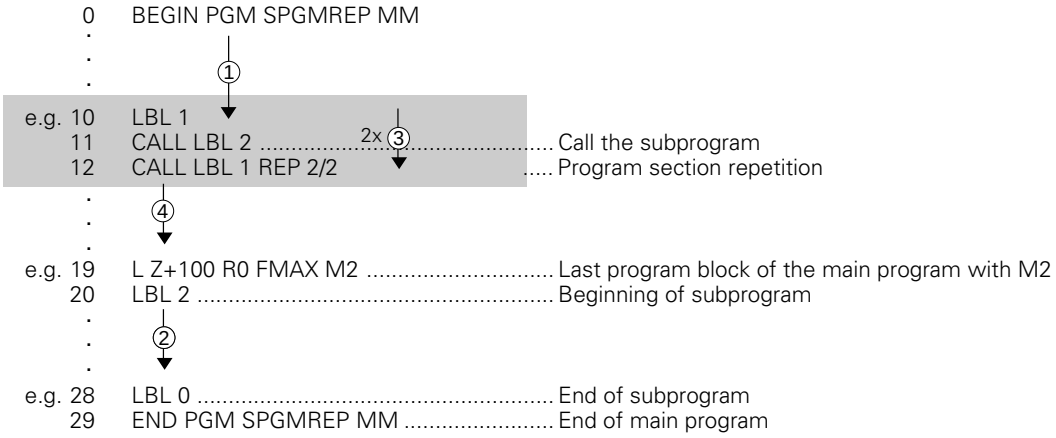


**Program execution**

1st Step: Main program SPGMREP is executed up to block 11.

2nd Step: Subprogram 2 is called and executed.

3rd Step: Program section between block 12 and block 10 is repeated twice. This means that subprogram 2 is repeated twice.

4th Step: Main program SPGMREP is executed from block 13 to block 19. End of program.



Downloaded from www.Manualslib.com manuals search engine

**Q Parameters are used for:**

- **programming families of parts**
- **defining contours through mathematical functions**

An entire **family of parts** can be programmed on the TNC with **a single part program**. You do this by entering variables – so-called Q parameters – instead of fixed numerical values.

Q parameters can represent, for example:

- coordinate values
- feed rates
- rpm
- cycle data

A Q parameter is designated by the letter Q and a number between 0 and 119.

Q parameters also enable you to program **contours** that are **defined through mathematical functions**.

With Q parameters you can make the execution of machining steps dependent on **logical conditions**.

**Q parameters** and **fixed numerical values** can be **mixed** within a program.

Q parameters can be assigned numerical values between -99999.9999 and +99999.9999.

You can enter the individual Q parameter functions either blockwise (see pages 7-3 to 7-8) or together in a formula through the ASCII keyboard (see pages 7-14 to 7-16).

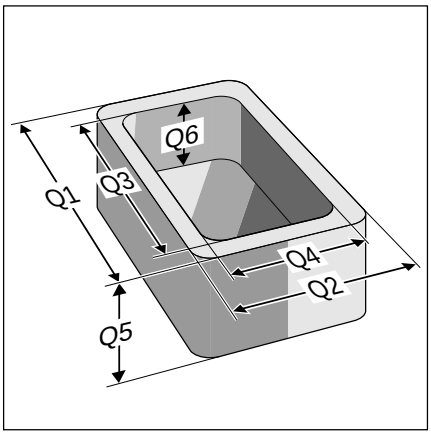


Fig. 7.1: Q parameters as variables

The TNC automatically assigns the same data to certain Q parameters. For example, the Q parameter Q108 is assigned the current tool radius. You will find a list of these parameters in Chapter 12.



Downloaded from www.Manualslib.com manuals search engine

Press the Q key (under the –/+ key in the numeric keypad) to call the Q parameter functions. A soft-key row appears with the following groups of functions:

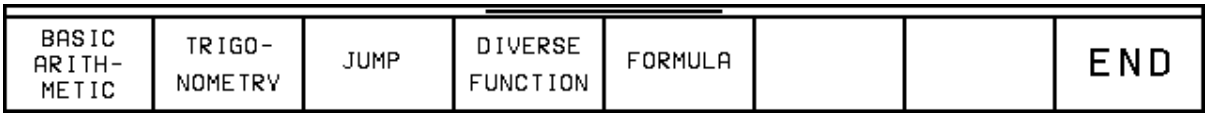


| Group of functions | Soft key |
|---|---|
| Assign, addition, subtraction, multiplication, division, square root | BASIC ARITH-METIC |
| Sine, cosine, root sum of squares, angle | TRIGO-NOMETRY |
| If equal, not equal, greater then, less than: jump; unconditional jump | JUMP |
| Other functions | DIVERSE FUNCTION |
| Enter formula via ASCII keyboard | FORMULA |



Downloaded from www.Manualslib.com manuals search engine

## 7.1 Part Families – Q Parameters Instead of Numerical Values

The Q parameter function FN0: ASSIGN is for assigning numerical values to Q parameters.
Example: Q10 = 25

This enables you to enter variable Q parameters in the program instead of fixed numerical values.
Example: L X + Q10 (= L X + 25)

You write one program for a whole family of parts, entering the characteristic dimensions as Q parameters. To program a specific part you then need only assign the fitting values to the individual Q parameters.

**Example**

Cylinder with Q parameters

| | | |
|---|---|---|
| Cylinder radius | R | = Q1 |
| Cylinder height | H | = Q2 |
| Cylinder Z1: | Q1 | = +30 |
| | Q2 | = +10 |
| Cylinder Z2: | Q1 | = +10 |
| | Q2 | = +50 |

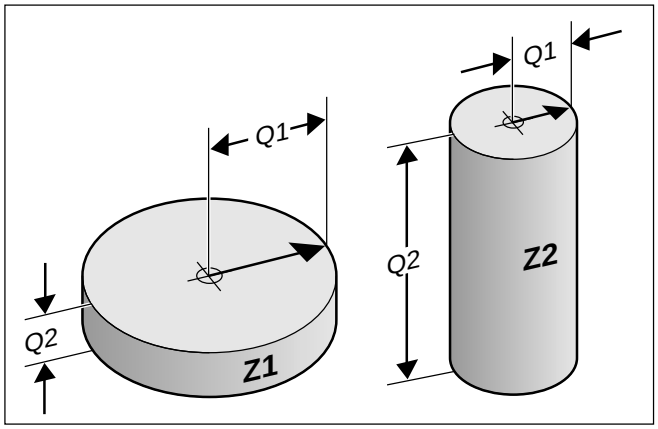

Fig. 7.2: Part dimensions as Q parameters

**To assign numerical values to Q parameters:**

| | |
|---|---|
| Q ▶ BASIC ARITH-METIC | Select “basic arithmetic”. |
| FN0 X = Y | Open a new block with function FN0. |
| **PARAMETER NUMBER FOR RESULT ?** | |
| e.g. 5 ENT | Enter the Q parameter number. |
| **FIRST VALUE / PARAMETER ?** | |
| e.g. 6 ENT | Enter a value or another Q parameter whose value should be assigned to Q5. |

*Resulting NC block: FN0: Q5 = 6*

The value to the right of the equal sign is assigned to the Q parameter to its left.



Downloaded from www.Manualslib.com manuals search engine

**Example for exercise: Full circle**

| | | | |
|---|---|---|---|
| Circle Center CC: | X | = | 50 mm |
| | Y | = | 50 mm |
| Beginning and end of the circular arc C: | X | = | 50 mm |
| | Y | = | 0 mm |
| Milling depth: | $Z_M$ | = | –5 mm |
| Tool Radius: | R | = | 15 mm |

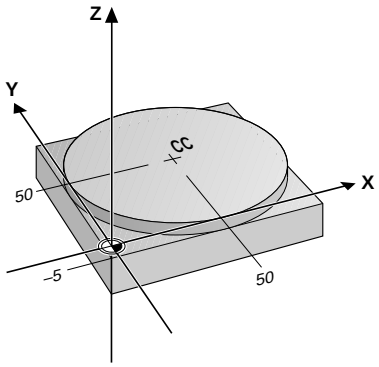


**Part program without Q parameters**

```
0  BEGIN CIRCLE MM ..... Begin program
1  BLK FORM 0.1 Z X+0 Y+0 Z–20 ..... Define the workpiece blank
2  BLK FORM 0.2 X+100 Y+100 Z+0
3  TOOL DEF 6 L+0 R+15 ..... Define the tool
4  TOOL CALL 6 Z S500 ..... Call the tool data
5  CC X+50 Y+50 ..... Coordinates of the circle center CC
6  L Z+100 R0 F MAX M6 ..... Insert the tool
7  APPR CT X+50 Y+0 Z–5 CCA90 R+20 RR F100 M3 .... Approach the contour
8  C X+50 Y+0 DR+ ..... Mill circular arc C around circle center CC; end point at
                        X = +50 mm and Y = 0; positive direction of rotation
9  DEP CT CCA180 R+30 F100..... ..... Depart the contour
10 L Z +100 F MAX M2
11 END PGM CIRCLE MM ..... Retract the tool and end the program
```

**Part program with Q parameters**

```
0  BEGIN PGM CIRCLEQP MM
1  FN 0: Q1 = +100 ..... Clearance height
2  FN 0: Q2 = +30 ..... Start position X
3  FN 0: Q3 = –20 ..... Start-End pos. Y
4  FN 0: Q4 = +70 ..... End position X
5  FN 0: Q5 = –5 ..... Milling depth
6  FN 0: Q6 = +50 ..... Center point X
7  FN 0: Q7 = +50 ..... Center point Y
8  FN 0: Q8 = +50 ..... Circle starting point X
9  FN 0: Q9 = +0 ..... Circle starting point Y
10 FN 0: Q10 = +0 ..... Tool length L
11 FN 0: Q11 = +15 ..... Tool radius R
12 FN 0: Q20 = +100 ..... Milling feed rate F
```

Blocks 1 to 12: Assign numerical values to the parameters

```
13 BLK FORM 0.1.Z X+0 Y+0 Z–20
14 BLK FORM 0.2 X+100 Y+100 Z+0
15 TOOL DEF 1 L+Q10 R+Q11
16 TOOL CALL 1 Z S1000
17 CC X+Q6 Y+Q7
18 L Z+Q1 R0 FMAX
19 APPR CT X+Q8 Y+Q9 Z+Q5 CCA90 R+20 RR F100 M3
20 C X+Q8 Y+Q9 DR+
21 DEP CT CCA180 R+30 F100
22 L Z+Q1 FMAX M2
23 END PGM CIRCLEQP MM
```

Blocks 13 to 22: corresponding to blocks 1 to 12 in the program CIRCLE.H



Downloaded from www.Manualslib.com manuals search engine

## 7.2 Describing Contours Through Mathematical Functions

Press the "basic arithmetic" soft key to call the following functions:

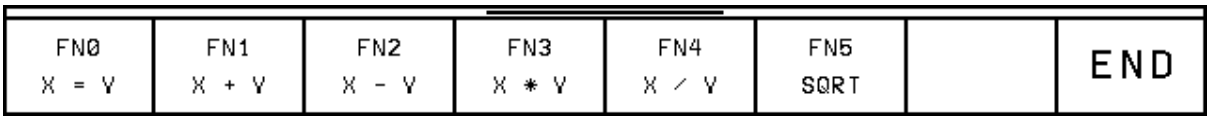


### Overview

The mathematical functions assign the result of one of the following operations to a Q parameter:

| | Soft key |
|---|---|
| **FN0: ASSIGN**<br>e.g. FN0: Q5 = +60<br>Assigns a fixed numerical value. | FN0<br>X = V |
| **FN1: ADDITION**<br>e.g. FN1: Q1 = –Q2 + -5<br>Calculates and assigns sum of two values. | FN1<br>X + V |
| **FN2: SUBTRACTION**<br>e.g. FN2: Q1 = +10 - +5<br>Calculates and assigns difference between two values. | FN2<br>X - V |
| **FN3: MULTIPLICATION**<br>e.g. FN3: Q2 = +3 * +3<br>Calculates and assigns product of two values. | FN3<br>X * V |
| **FN4: DIVISION**<br>e.g. FN4: Q4 = +8 DIV +Q2<br>Calculates and assigns quotient of two values.<br>**Division by 0 is not permitted** | FN4<br>X / V |
| **FN5: SQUARE ROOT**<br>e.g. FN5: Q20 = SQRT 4<br>Calculates and assigns the root of a number.<br>**Square root of a negative number is not permitted** | FN5<br>SQRT |

In the above table, "values" can be:

- two numbers
- two Q parameters, or
- a number and a Q parameter

The Q parameters and numerical values in the equations can be entered with positive or negative signs.

**To select a mathematical operation:**

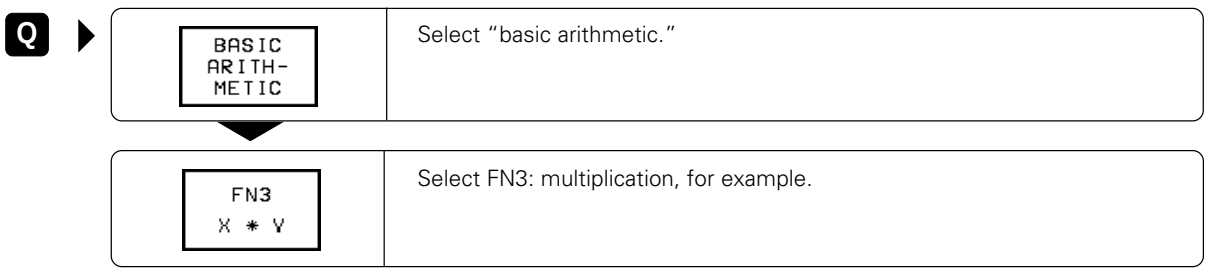




Downloaded from www.Manualslib.com manuals search engine

**Programming example for fundamental operations**

Assign the value 10 to parameter Q5, and assign the product of Q5 and 7 to Q12.

| | |
|---|---|
| Q ▶ BASIC ARITH- METIC | Select "basic arithmetic." |
| FN0 X = Y | Open a new block with FN0 (assign). |
| **PARAMETER NUMBER FOR RESULT ?** | |
| 5 ENT | Enter a parameter number, for example Q5. |
| **FIRST VALUE / PARAMETER ?** | |
| 1 0 ENT | Assign a numerical value to Q5. |
| Q ▶ BASIC ARITH- METIC | Select "basic arithmetic." |
| FN3 X * Y | Open a new block with FN3 (multiplication). |
| **PARAMETER NUMBER FOR RESULT ?** | |
| 1 2 ENT | Enter a parameter number, for example Q12. |
| **FIRST VALUE / PARAMETER ?** | |
| Q 5 ENT | Enter Q5 (=10) and confirm. |
| **SECOND VALUE / PARAMETER ?** | |
| 7 ENT | Enter the value 7 and confirm. |

*Resulting NC blocks:*

*FN0: Q5 = +10*
*FN3: Q12 = +Q5 ✻+7*



Downloaded from www.Manualslib.com manuals search engine

## 7.3 Trigonometric Functions

Sine, cosine and tangent are terms for the ratios of the sides of right triangles. The TNC can save you a lot of time spent searching in handbooks of trigonometric functions by calculating these functions for you.

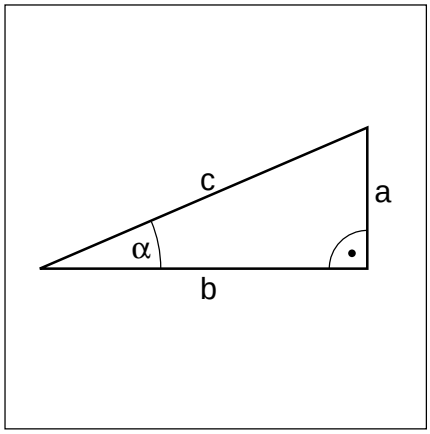


Fig. 7.3: Sides and angles on a right triangle

For a right triangle:

Sine: $\sin \alpha = a / c$

Cosine: $\cos \alpha = b / c$

Tangent: $\tan \alpha = a / b = \sin \alpha / \cos \alpha$

Where:

- c is the side opposite the right angle
- a is the side opposite the angle $\alpha$
- b the third side

The angle can be found from the tangent:

$\alpha = \arctan \alpha = \text{arc tan } (a / b) = \text{arc tan } (\sin \alpha / \cos \alpha)$

Example: a = 10 mm
b = 10 mm
$\alpha$ = arc tan (a / b) = arc tan 1 = 45°

furthermore: $a^2 + b^2 = c^2$ $(a^2 = a \cdot a)$

$c = \sqrt{a^2 + b^2}$

Press the “trigonometric functions” soft key to call the following options:

| FN6 SIN(X) | FN7 COS(X) | FN8 X LEN Y | FN13 X ANG Y | | | | END |
|---|---|---|---|---|---|---|---|

### Overview

| | Soft key |
|---|---|
| **FN6: SINE**<br>e.g. FN6: Q20 = SIN–Q5<br>Calculate sine of an angle in degrees (°) and assign it to a parameter | FN6 SIN(X) |
| **FN7: COSINE**<br>e.g. FN7: Q21 = COS–Q5<br>Calculate cosine of an angle in degrees (°) and assign it to a parameter | FN7 COS(X) |
| **FN8: ROOT-SUM OF SQUARES**<br>e.g. FN8: Q10 = +5 LEN +4<br>Take the square root of the sum of two squares and assign it to a parameter | FN8 X LEN Y |
| **FN13: ANGLE**<br>e.g. FN13: Q20 = +10 ANG–Q1<br>Calculate the angle from the arc tangent of two sides or from the sine and cosine of the angle (0° – angle – 360°) and assign it to a parameter | FN13 X ANG Y |



Downloaded from www.Manualslib.com manuals search engine

## 7.4 If-Then Decisions with Q Parameters

The TNC can compare a Q parameter with another Q parameter or with a numerical value for "if-then" decisions.

### Jumps

The jump target is specified in the decision block through a label number. If the programmed condition is fulfilled, the TNC continues the program at the specified label. If it is not fulfilled, it continues with the next block.

To jump to another program, enter PGM CALL (see page 6-8) after the block with the target label.

Abbreviations used:

| | |
|---|---|
| **IF** | If |
| **EQU** | Equals |
| **NE** | Not equal |
| **GT** | Greater than |
| **LT** | Less than |
| **GOTO** | Go to |

#### Unconditional jumps

An unconditional jump is programmed by entering a conditional jump whose condition is always met, e.g.:

FN 9: IF+10 EQU+10 GOTO LBL1

Press the “jump” soft key to call the following options:

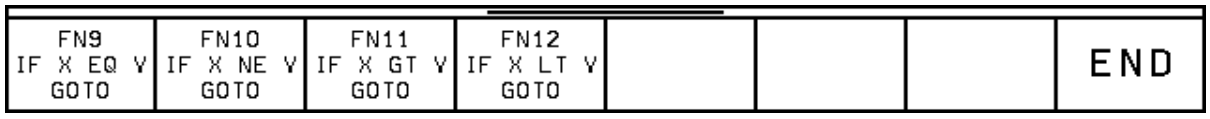




Downloaded from www.Manualslib.com manuals search engine

## Overview

| | Soft key |
|---|---|
| **FN9: IF EQUAL, JUMP**<br>e.g. FN9: IF +Q1 EQU +Q3 GOTO LBL 5<br>If the two values or parameters are equal, jump to the given label. | FN9<br>IF X EQ Y<br>GOTO |
| **FN10: IF NOT EQUAL, JUMP**<br>e.g. FN10: IF +10 NE –Q5 GOTO LBL 10<br>If the two values or parameters are unequal, jump to the given label. | FN10<br>IF X NE Y<br>GOTO |
| **FN11: IF GREATER THAN, JUMP**<br>e.g. FN11: IF+Q1 GT+10 GOTO LBL 5<br>If the first value or parameter is greater than the second value or parameter, jump to the given label. | FN11<br>IF X GT Y<br>GOTO |
| **FN12: IF LESS THAN, JUMP**<br>e.g. FN12: IF+Q5 LT+0 GOTO LBL 1<br>If the first value or parameter is less than the second value or parameter, jump to the given label. | FN12<br>IF X LT Y<br>GOTO |

**Jump example**

You want to jump to program 100.H as soon as Q5 becomes negative.

```
 .
 .
 .
5    FN0: Q5 = +10 ..... Assign a value, e.g. +10, to parameter Q5
 .
 .
 .
9    FN 2: Q5 = +Q5 – +12 ..... Make Q5 smaller
10   FN 12: IF +Q5 LT +0 GOTO LBL 5 ..... Jump to label 5, if +Q5 < 0
 .
 .
 .
15   LBL 5 ..... Label 5
16   PGM CALL 100 ..... Jump to program 100.H
 .
 .
 .
```



Downloaded from www.Manualslib.com manuals search engine

## 7.5 Checking and Changing Q Parameters

Q parameters can be checked and – if necessary – changed during a program run or program test.

**Preparation:**

- If you are in a program run, interrupt it, for example by pressing the machine STOP key and the INTERNAL STOP soft key.
- If you are doing a test run, interrupt it.

**To call the Q parameter:**

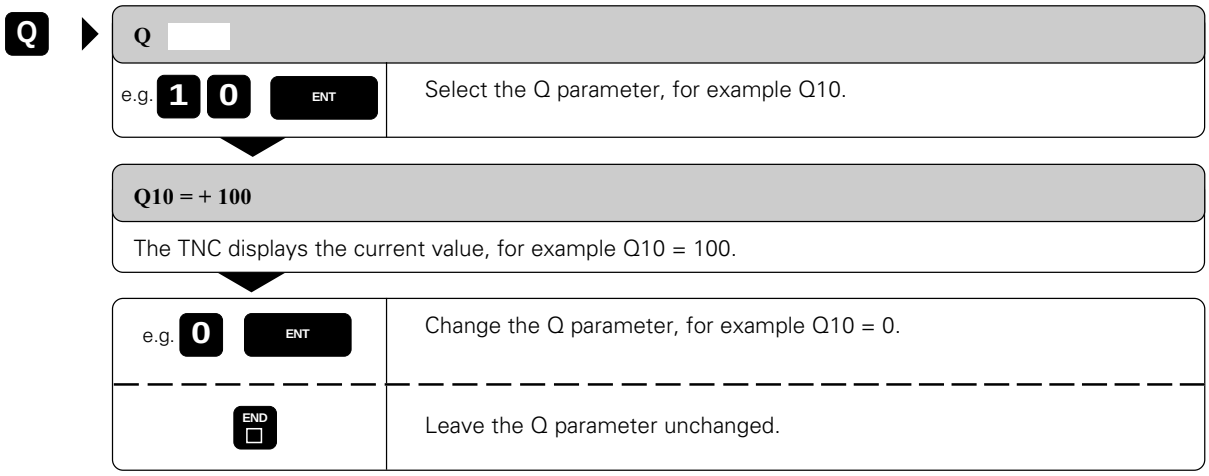




Downloaded from www.Manualslib.com manuals search engine

## 7.6 Diverse Functions

Press the "diverse function" soft key to call the following options:

### Displaying error messages

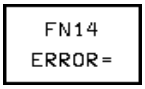


With the function FN14: ERROR you can call messages that were pre-programmed by the machine tool builder.

If the TNC runs into a block with FN 14 during a program run or test run, it will interrupt the run and display an error message. The program must then be restarted.

**Input:**

e.g. FN 14: ERROR = 254

The TNC then displays the text stored under error number 254.

| Error number to be entered | Prepared dialog text |
|---|---|
| 0 ... 299 | FN 14: ERROR CODE 0 .... 299 |
| 300 ... 399 | PLC: ERROR 0 ... 99 |
| 400 ... 499 | CYCLE PARAMETER 0 .... 99 |

Your machine tool builder may have programmed a dialog text that differs from the above.



Downloaded from www.Manualslib.com manuals search engine

## Output through an external data interface

FN15
PRINT

The function FN15: PRINT transfers the values of Q parameters and error messages through the data interface, for example to a printer.

- FN15: PRINT with numerical values up to 200
  - 0 to 99: Dialog texts for manufacturers cycles
  - 100 to 199: PLC error messages
  - 200: ETX character

  e.g. FN15: PRINT 20
  Transfers the corresponding dialog text.
- FN15: PRINT with Q parameter
  e.g. FN15: PRINT Q20
  Transfers the value of the corresponding Q parameter.

You can transfer up to 6 Q parameters and numerical values simultaneously. The TNC separates them with slashes.
e.g. FN15: PRINT 1/Q1/2/Q2

- If you wish to interrupt the part program when FN15 is active, press the CLOSE RS-232-C soft key to close the interface.
- If you wish to transfer values to a PC using FN 15, the TNC will create the file %FN15RUN.A on the PC and the transfered values will be saved there.

## Transfer to the PLC

FN19
PLC=

The function FN19: PLC transfers up to two numerical values or Q parameters to the PLC.

Increments and units: 0.1 µm or 0.0001°

Example FN19: PLC = +10/+Q3

The numerical value 10 means 1 µm or 0.001°.



Downloaded from www.Manualslib.com manuals search engine

## 7.7 Entering Formulas Directly

You can enter mathematical formulas that include several operations either by soft key or directly through the ASCII keyboard. We recommend entering the operations by soft key, since this excludes the possibility of syntax errors.

### Overview of functions

| Mathematical function | Soft key |
|---|---|
| Addition<br>e.g. Q10 = Q1 + Q5 | + |
| Subtraction<br>e.g. Q25 = Q7 – Q108 | – |
| Multiplication<br>e.g. Q12 = 5 * Q5 | * |
| Division<br>e.g. Q25 = Q1 / Q2 | / |
| Open/Close parentheses<br>e.g. Q12 = Q1 * (Q2 + Q3) | ( ) |
| Square<br>e.g. Q15 = SQ 5 | SQ |
| Square root<br>e.g. Q22 = SQRT 25 | SQRT |
| Sine of an angle<br>e.g. Q44 = SIN 45 | SIN |
| Cosine of an angle<br>e.g. Q45 = COS 45 | COS |
| Tangent of an angle<br>e.g. Q46 = TAN 45 | TAN |



Downloaded from www.Manualslib.com manuals search engine

| | |
|---|---|
| Arc sine:<br>Inverse of the sine; Determine the angle from the ratio of the opposite side to the hypotenuse<br>e.g. Q10 = ASIN 0.75 | ASIN |
| Arc cosine:<br>Inverse of the cosine; Determine the angle from the ratio of the adjacent side to the hypotenuse<br>e.g. Q11 = ACOS Q | ACOS |
| Arc tangent:<br>Inverse of the tangent; Determine the angle from the ratio of the opposite to the adjacent side<br>e.g. Q12 = ATAN Q11 | ATAN |
| Powers<br>e.g. Q15 = 3^3 | ^ |
| π (3.14159) | PI |
| Natural logarithm (LN) of a number, base 2.7183<br>e.g. Q15 = LN Q11 | LN |
| Logarithm of a number; base 10<br>e.g. Q33 = LOG 022 | LOG |
| Exponential function (2.7183 to the power of n)<br>e.g. Q1 = EXP Q12 | EXP |
| Negation (multiplication by –1)<br>e.g. Q2 = NEG Q1 | NEG |
| Dropping of trailing zeros (making an integer)<br>e.g. Q3 = INT Q42 | INT |
| Absolute value<br>e.g. Q4 = ABS Q22 | ABS |
| Dropping the values before the decimal point; fractions<br>e.g. Q5 = FRAC Q23 | FRAC |



Downloaded from www.Manualslib.com manuals search engine

## Rules for formulas

- Higher-level operations are performed first (multiplication and division before addition and subtraction)
  e.g. Q1 = 5 x 3 + 2 x 10 = 35 => 1st step: 5 x 3 = 15
  2nd step: 2 x 10 = 20
  3rd step: 15 + 20 = 35
  e.g. Q2 = SQ 10 – 3^3 = 73 => 1st step: 10 squared = 100
  2nd step: 3 to the power of 3 = 27
  3rd step: 100 – 27 = 73
- Law of distribution for calculating with parentheses
  a(b + c) = ab + ac

### Programming example

Calculate an angle with arc tangent as opposite side (Q12) and adjacent side (Q13), then store in Q25.

| | |
|---|---|
| Q ▶ FORMULA | Select the formula entering function. |
| **PARAMETER NUMBER FOR RESULT ?** | |
| 2 5 ENT | Enter the parameter number, e.g. Q25. |
| ▷ ATAN | Shift the soft-key row to the right.<br>Select arc tangent. |
| ◁ ( | Shift the soft-key row back to the left.<br>Open parentheses. |
| Q 1 2 | Enter parameter number Q12. |
| / | Select division. |
| Q 1 3<br>) END | Enter parameter number Q13.<br>Close parentheses; conclude formula entry. |

*Resulting NC block: Q25 = ATAN (Q12 / Q13)*



Downloaded from www.Manualslib.com manuals search engine

## 7.8 Examples for Exercise

### Rectangular pocket with island, corner rounding and tangential approach

| | | | |
|---|---|---|---|
| Pocket center coordinates: | X | = | 50 mm (Q1) |
| | Y | = | 50 mm (Q2) |
| Pocket length | X | = | 90 mm (Q3) |
| Pocket width | Y | = | 70 mm (Q4) |
| Working depth | Z | = | (–)15 mm (–Q5) |
| Corner radius R | R | = | 10 mm (Q6) |
| Milling feed rate | F | = | 200 mm/min (Q7) |

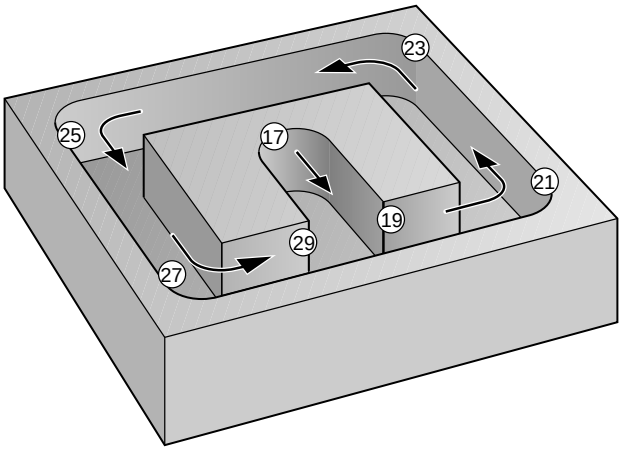


**Part program**

```
0  BEGIN PGM QPEXAMP1 MM
1  BLK FORM 0.1 Z X+0 Y+0 Z–20          } Begin program, define workpiece blank
2  BLK FORM 0.2 X+100 Y+100 Z+0
3  FN 0: Q1 = +50                       } Assign pocket data to the Q parameters
4  FN 0: Q2 = +50
5  FN 0: Q3 = +90
6  FN 0: Q4 = +70
7  FN 0: Q5 = +15
8  FN 0: Q6 = +10
9  FN 0: Q7 = +200
10 TOOL DEF 1 L+0 R+5                   } Define the tool and insert it
11 TOOL CALL 1 Z S1000
12 L Z+100 R0 F MAX M6
13 FN4: Q13 = +Q3 DIV+2                 } The length and width of the pocket are halved for the paths of
14 FN4: Q14 = +Q4 DIV+2                   traverse in blocks 20, 21, 29
15 FN4: Q16 = +Q6 DIV+4 ..... Rounding radius for tangential approach
16 FN4: Q17 = +Q7 DIV+2 ..... Feed rate in corners is half the feed rate for linear traverse
17 L X+Q1 Y+Q2 R0 F MAX M3 ..... Pre-position in X and Y (pocket center), spindle on
18 L Z+2 F MAX ..... Pre-position above the workpiece
19 L Z–Q5 FQ7 ..... Move to working depth – Q5 (= –15 mm) with feed rate Q7
                    (= 100)
20 APPR LN IX+Q13 Y+Q2 LEN+Q14 RL F100 M3 . Approach the pocket
21 L IY+Q14                             } Mill the rectangular pocket
22 RND RQ6 FQ17
23 L IX–Q3
24 RND RQ6 FQ17
25 L IY–Q4
26 RND RQ6 FQ17
27 L IX+Q3
28 RND RQ6 FQ17
29 L IY+Q14
30 DEP LN LEN+20 F1000 ..... Retract to pocket center
31 L Z+100 F MAX M2 ..... Retract tool from workpiece
32 END PGM QPEXAMP1 MM
```



Downloaded from www.Manualslib.com manuals search engine

## Bolt hole circle

Bore pattern distributed over a full circle:

Entry values are listed below in program blocks 1 - 8.

Movements in the plane are programmed with polar coordinates.

Bore pattern distributed over a circle sector:

Entry values are listed below in lines 20 - 24, Q5, Q7 and Q8 remain the same.

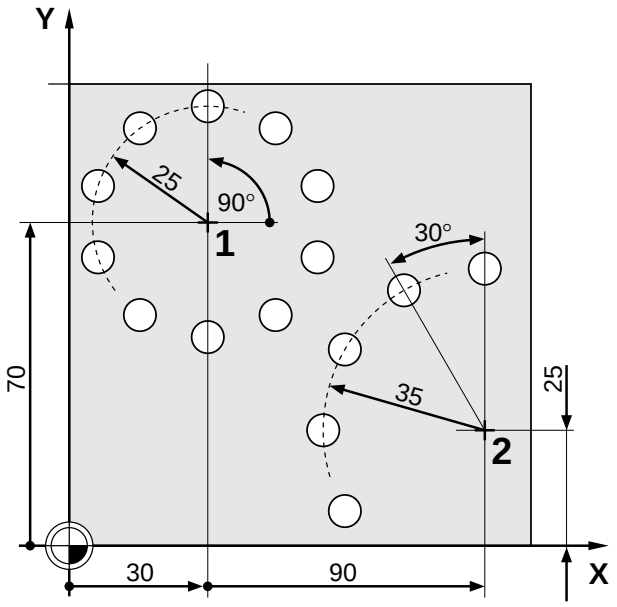


**Part program**

| | |
|---|---|
| 0 BEGIN PGM K71 MM | **Load data for bolt hole circle 1:** |
| 1 FN 0: Q1 = + 30 | Circle center X coordinate |
| 2 FN 0: Q2 = +70 | Circle center Y coordinate |
| 3 FN 0: Q3 = +11 | Number of holes |
| 4 FN 0: Q4 = +25 | Circle radius |
| 5 FN 0: Q5 = +90 | Start angle |
| 6 FN 0: Q6 = +0 | Hole angle increment (0: distribute holes over 360°) |
| 7 FN 0: Q7 = +2 | Setup clearance |
| 8 FN 0: Q8 = +15 | Total hole depth |
| 9 BLK FORM 0.1 Z X+0 Y+0 Z–20 | |
| 10 BLK FORM 0.2 X+100 Y+100 Z+0 | |
| 11 TOOL DEF 1 L+0 R+4 | |
| 12 TOOL CALL 1 Z S2500 | |
| 13 CYCL DEF 1.0 PECKING | Definition of the pecking cycle |
| 14 CYCL DEF 1.1 SET UP +Q7 | Setup clearance |
| 15 CYCL DEF 1.2 DEPTH –Q8 | Total hole depth according to the load data |
| 16 CYCL DEF 1.3 PECKG +5 | |
| 17 CYCL DEF 1.4 DWELL 0 | |
| 18 CYCL DEF 1.5 F250 | |
| 19 CALL LBL 1 | Call bolt hole circle 1, **load data for bolt hole circle 2** (only re-enter changed data): |
| 20 FN 0: Q1 = +90 | New circle center X coordinate |
| 21 FN 0: Q2 = +25 | New circle center Y coordinate |
| 22 FN 0: Q3 = +5 | New number of holes |
| 23 FN 0: Q4 = +35 | New circle radius |
| 24 FN 0: Q6 = +30 | New hole angle increment (not a full circle, 5 holes at 30° intervals) |
| 25 CALL LBL 1 | Call bolt hole circle 2 |
| 26 L Z+200 R0 F MAX M2 | |

Continued ...



Downloaded from www.Manualslib.com manuals search engine

```
27 LBL 1 ..... Subprogram bolt hole circle
28 FN 0: Q10 = +0 ..... Set the counter for finished holes
29 FN 10: IF +Q6 NE +0 GOTO LBL 10 ..... If the hole angle increment has been entered, jump to LBL 10
30 FN 4: Q6 = +360 DIV +Q3 ..... Calculate the hole angle increment, distribute holes over 360°
31 LBL 10
32 FN 1: Q11 = +Q5 + +Q6 ..... Calculate second hole position from the start angle and hole
                                angle increment
33 CC X+Q1 Y+Q2 ..... Set pole at bolt hole circle center
34 LP PR+Q4 PA+Q5 R0 F MAX M3 ..... Move in the plane to 1st hole
35 L Z+Q7 R0 F MAX M99 ..... Move in Z to setup clearance, call cycle
36 FN 1: Q10 = +Q10 + +1 ..... Count finished holes
37 FN 9: IF +Q10 EQU +Q3 GOTO LBL 99 ..... Finished?
38 LBL 2
39 LP PR+Q4 PA+Q11 R0 F MAX M99 ..... Make a second and further holes
40 FN 1: Q10 = +Q10 + +1 ..... Count finished holes
41 FN 1: Q11 = +Q11 + +Q6 ..... Calculate angle for next hole
                                (update)
42 FN 12: IF + Q10 LT + Q3 GOTO LBL 2 ..... Not finished?
43 LBL 99
44 L IZ+200 R0 F MAX ..... Retract in Z
45 LBL 0 ..... End of subprogram
46 END PGM K71 MM
```



Downloaded from www.Manualslib.com manuals search engine

## Ellipse

X coordinate calculation: X = a x cos α
Y coordinate calculation: Y = b x sin α

a, b : Semimajor and semiminor axes of the ellipse
α : Angle between the leading axis and the connecting line from P to the center of the ellipse.
$X_0$, $Y_0$ : Center of the ellipse

Process:
The points of the ellipse are calculated and connected by many short lines. The more points that are calculated and the shorter the lines between them, the smoother the curve.

The machining direction can be varied by changing the entries for start and end angles. The input parameters are listed below in blocks 1–12. Calculations are programmed with the FORMULA function.

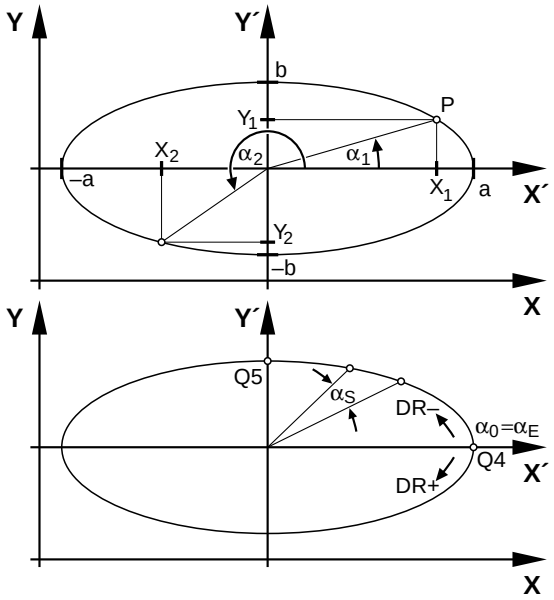


**Part program**

```
0 BEGIN PGM K72 MM ..... Load data
1 FN 0: Q1 = +50 ..... X coordinate for center of ellipse
2 FN 0: Q2 = +50 ..... Y coordinate for center of ellipse
3 FN 0: Q3 = +50 ..... Semiaxis in X
4 FN 0: Q4 = +20 ..... Semiaxis in Y
5 FN 0: Q5 = +0 ..... Start angle
6 FN 0: Q6 = +360 ..... End angle
7 FN 0: Q7 = +40 ..... Number of calculating steps
8 FN 0: Q8 = +0 ..... Rotational position
9 FN 0: Q9 = +10 ..... Depth
10 FN 0: Q10 = +100 ..... Plunging feed rate
11 FN 0: Q11 = +350 ..... Milling feed rate
12 FN 0: Q12 = +2 ..... Setup clearance Z
13 BLK FORM 0.1 Z X+0 Y+0 Z–20
14 BLK FORM 0.2 X+100 Y+100 Z+0
15 TOOL DEF 1 L+0 R+2.5
16 TOOL CALL 1 Z S2800
17 L Z+2000 R0 F MAX
18 CALL LBL 10 ..... Call subprogram ellipse
19 L Z+20 R0 F MAX M2 ..... Retract in Z, end of main program
```

Continued ...



Downloaded from www.Manualslib.com manuals search engine

```
20 LBL 10
21 CYCL DEF 7.0 DATUM SHIFT
22 CYCL DEF 7.1 X+Q1
23 CYCL DEF 7.2 Y+Q2 ..... Shift datum to center of ellipse
24 CYCL DEF 10.0 ROTATION
25 CYCL DEF 10.1 ROT +Q8 ..... Activate rotation, if Q8 is loaded
26 Q35 = (Q6 - Q5) / Q7 ..... Calculate angle increment (end angle to start angle
                              divided by number of steps)
27 Q36 = Q5 ..... Current angle for calculation =
                  set start angle
28 Q37 = 0 ..... Set counter for milled steps
29 Q21 = Q3 * COS Q36 ..... Calculate X coordinate of start point
30 Q22 = Q4 * SIN Q36 ..... Calculate Y coordinate of start point
31 L X+Q21 Y+Q22 R0 F MAX M3 ..... Move to start point in the plane
32 L Z+Q12 R0 F MAX ..... Rapid traverse in Z to setup clearance
33 L Z–Q9 R0 FQ10 ..... Plunge to milling depth at plunging feed rate

34 LBL 1
35 Q36 = Q36 + Q35 ..... Update the angle
36 Q37 = Q37 + 1 ..... Update the counter
37 Q21 = Q3 *COS Q36 ..... Calculate the next X coordinate
38 Q22 = Q4 * SIN Q36 ..... Calculate the next Y coordinate
39 L X+Q21 Y+Q22 R0 FQ11 ..... Move to next point
40 FN 12: IF +Q37 LT +Q7 GOTO LBL 1 ..... Unfinished?

41 CYCL DEF 10.0 ROTATION
42 CYCL DEF 10.1 ROT+0 ..... Reset rotation
43 CYCL DEF 7.0 DATUM SHIFT
44 CYCL DEF 7.1 X+0
45 CYCL DEF 7.2 Y+0 ..... Reset datum shift
46 L Z+Q12 R0 F MAX ..... Move in Z to setup clearance
47 LBL 0 ..... End of subprogram
48 END PGM K72 MM
```



Downloaded from www.Manualslib.com manuals search engine

## Hemisphere machined with an end mill

Notes on the program:

- The tool moves upward in the Z/X plane.
- You can enter an oversize in block 12 (Q12) if you want to machine the contour in several steps.
- The tool radius is automatically compensated with parameter Q108.

The program works with the following quantities:

| | | |
|---|---|---|
| • Solid angle: | Start angle | Q1 |
| | End angle | Q2 |
| | Increment | Q3 |
| • Sphere radius | | Q4 |
| • Setup clearance | | Q5 |
| • Plane angle: | Start angle | Q6 |
| | End angle | Q7 |
| | Increment | Q8 |
| • Center of sphere: | X coordinate | Q9 |
| | Y coordinate | Q10 |
| • Milling feed rate | | Q11 |
| • Oversize | | Q12 |

The parameters additionally defined in the program have the following meanings:

- Q15: Setup clearance above the sphere
- Q21: Solid angle during machining
- Q24: Distance from center of sphere to tool center
- Q26: Plane angle during machining
- Q108: TNC parameter with tool radius

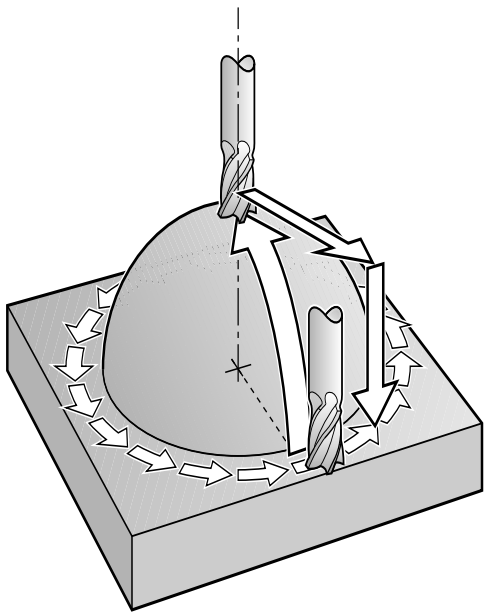

**Part program**

```
0  BEGIN PGM QPEXAMP3 MM
1  FN 0: Q1  =  + 90
2  FN 0: Q2  =  + 0
3  FN 0: Q3  =  + 5
4  FN 0: Q4  =  + 45
5  FN 0: Q5  =  + 2
6  FN 0: Q6  =  + 0
7  FN 0: Q7  =  + 360
8  FN 0: Q8  =  + 5
9  FN 0: Q9  =  + 50
10 FN 0: Q10 =  + 50
11 FN 0: Q11 =  + 500
12 FN 0: Q12 =  + 0 ..... Assign the sphere data to the parameters
13 BLK FORM 0.1 Z X+0 Y+0 Z–50
14 BLK FORM 0.2 X+100 Y+100 Z+0
15 TOOL DEF 1 L+0 R+5
16 TOOL CALL 1 Z S1000
17 L Z + 100 R0 FMAX M6 ..... Define the workpiece blank and tool, insert tool
18 CALL LBL 10 ..... Subprogram call
19 L Z + 100 R0 FMAX M2 ..... Retract tool, end program, return to block 1
```

Continued...



Downloaded from www.Manualslib.com manuals search engine

```
20  LBL 10
21  FN1: Q15 = + Q5 + + Q4
22  FN0: Q21 = + Q1
23  FN1: Q24 = + Q4 + + Q108
24  FN0: Q26 = + Q6                          } Determine starting and calculation values

25  CYCL DEF 7.0 DATUM
26  CYCL DEF 7.1 X + Q9
27  CYCL DEF 7.2 Y + Q10
28  CYCL DEF 7.3 Z – Q4                      } Shift datum to center of sphere

29  CYCL DEF 10.0 ROTATION
30  CYCL DEF 10.1 ROT + Q6                   } Rotation for program start (starting plane angle)

31  CC X + 0 Y + 0
32  LP PR + Q24 PA + Q6 R0 FQ11 ..... Pre-positioning before machining
33  LBL 1
34  CC Z + 0 X + Q 108
35  L Y + 0 Z + 0 FQ11 ..... Pre-positioning at each arc beginning
36  LBL 2

37  LP PR + Q4 PA + Q21 R0 FQ11
38  FN2: Q21 = + Q21 – + Q3
39  FN11: IF + Q21 GT + Q2 GOTO LBL2         } Mill the sphere upward until the highest point is reached

40  LP PR + Q4 PA + Q2
41  L Z + Q15 R0 F1000
42  L X + Q24 R0 FMAX                        } Mill the highest point on the sphere and retract the tool

43  FN1: Q26 = + Q26 + + Q8 ..... Prepare the next rotation increment
44  FN0: Q21 = + Q1 ..... Reset solid angle for machining to the starting value

45  CYCL DEF 10.0 ROTATION
46  CYCL DEF 10.1 ROT + Q26
47  FN12: IF + Q26 LT + Q7 GOTO LBL1
48  FN9: IF + Q26 EQU + Q7 GOTO LBL1         } Rotate the coordinate system around the Z axis until the end plane angle is reached

49  CYCL DEF 10.0 ROTATION
50  CYCL DEF 10.1 ROT + 0
51  CYCL DEF 7.0 DATUM
52  CYCL DEF 7.1 X + 0
53  CYCL DEF 7.2 Y + 0
54  CYCL DEF 7.3 Z + 0                       } Reset rotation and datum shift

55  LBL 0 ..... End of subprogram
56  END PGM QPEXAMP3 MM
```



Downloaded from www.Manualslib.com manuals search engine

# 8.1 General Overview

Frequently recurring machining sequences which comprise several working steps are stored in the control memory as standard cycles. Coordinate transformations and other special functions are also provided as standard cycles.

Cycles are subdivided into:

- **Simple fixed cycles,** such as pecking and tapping as well as the milling operations slot milling, rectangular pocket milling and circular pocket milling.
- **SL (Subcontour List) Cycles,** which allow machining of relatively complex contours composed of several overlapping subcontours.
- **SL Cycles** for contour-oriented machining. During rough-out and finishing, the tool follows the contour as defined in the SL cycles. The cutter infeed positions are determined automatically by the control.
- **Coordinate transformation cycles,** which enable datum shift, rotation, mirror image, enlarging and reducing for various contours.
- **Special cycles,** such as dwell time, program call, oriented spindle stop and tilting the working plane.

## Programming a cycle

### Defining a cycle

Pressing the CYCL DEF key opens the cycle directory. Select the desired cycle and program it in the dialog. The following example illustrates how any cycle can be defined:

| | |
|---|---|
| CYCL DEF | Open cycle directory. |
| **CYCL DEF 1 PECKING** | |
| ↓ ↑ | Select, for example, cycle 17 via the vertical arrow keys. |
| GOTO □ 1 7 ENT | Address the desired cycle directly with GOTO. |
| **CYCL DEF 17 RIGID TAPPING** | |
| ENT | Confirm entry. |

. . .



Downloaded from www.Manualslib.com manuals search engine

The data for the selected cycle is interrogated by the control:

| SETUP CLEARANCE? | |
|---|---|
| e.g. 2 ENT | Enter setup clearance, e.g. +2 mm. |

| TOTAL HOLE DEPTH? | |
|---|---|
| e.g. -/+ 3 0 ENT | Enter total hole depth, e.g. –30 mm. |

| THREAD PITCH? | |
|---|---|
| e.g. 0 . 7 5 ENT | Enter thread pitch, e.g. +0.75 mm. |

*Resulting NC block*

*17.0 RIGID TAPPING*
*17.1 SET UP +2*
*17.2 DEPTH –30*
*17.3 PITCH +0.75*

**Cycle call**

The following cycles become effective automatically by being defined in the part program:

- coordinate transformation cycles,
- the dwell time cycle, and
- the SL cycles which determine the contour and the global parameters.

The remaining cycles must be called-up separately. Further information on cycle call is provided in the descriptions of the individual cycles.

If the cycle is to be executed after the block in which it was called-up, program the cycle call

- with CYCL CALL

CYCL CALL ▶

| MISCELLANEOUS FUNCTION | |
|---|---|
| e.g. 3 ENT | Cycle call with miscellaneous function M3. |

- with miscellaneous function M99.

If the cycle is to be executed after every positioning block, the cycle must be called-up with miscellaneous function M89 (depending on machine parameter MP7440).

The effect of M89 is cancelled with
- M99
- CYCL CALL
- CYCL DEF.

**Prerequisites:**

The following data must be programmed before a cycle call :

- BLK FORM for graphic display
- Tool call
- Positioning block for starting position X, Y (machining level) with radius compensation R0
- Positioning block for starting position Z (tool axis, safety distance)
- Direction of rotation of the spindle (additional functions M3/M4; exception: cycle 18)
- Cycle definition (CYCLE DEF).



Downloaded from www.Manualslib.com manuals search engine

## Dimensions in the tool axis

The dimensions for the tool axis are always referenced to the position of the tool at the time of the cycle call and interpreted by the control as incremental dimensions. The incremental key does not have to be pressed. The algebraic sign programmed for depth determines the working direction.

The control assumes that the workpiece is located at clearance height over the workpiece at the beginning of the cycle (except for SL cycles of group II).

## Cycles preset by the manufacturer (OEM cycles)

The machine manufacturer can store additional cycles in the control memory. These cycles can be called-up via cycle numbers 68 to 99. See your machine tool manual.



Downloaded from www.Manualslib.com manuals search engine

# 8.2 Simple Fixed Cycles

## PECKING (Cycle 1)

**Process:**

- The tool drills from the starting point to the first pecking depth at the programmed feed rate.
- After reaching the first pecking depth, the tool retracts in rapid traverse FMAX to the starting position and advances again to the first pecking depth, minus the advanced stop distance t (see calculations).
- The tool advances with another infeed at the programmed feed rate.
- Drilling and retracting are performed alternately until the programmed total hole depth is reached.
- After a dwell time at the hole bottom, the tool is retracted to the starting position in rapid traverse FMAX for chip breaking.

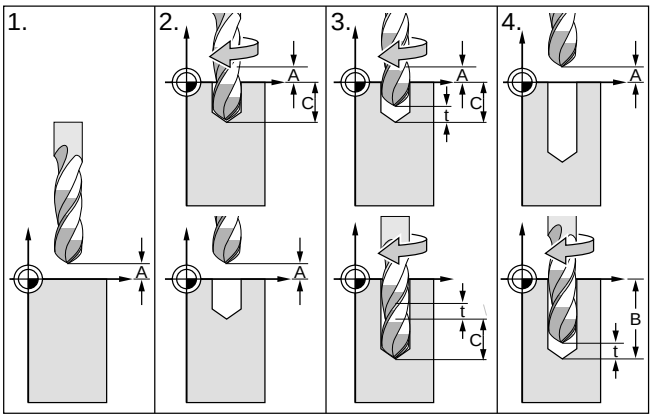


Fig. 8.1: PECKING cycle

**Input data**

- SETUP CLEARANCE Ⓐ:
  Distance between tool tip (at starting position) and workpiece surface
- TOTAL HOLE DEPTH Ⓑ:
  Distance between workpiece surface and bottom of hole (tip of drill taper). The algebraic sign determines the working direction (a negative value means negative working direction).
- PECKING DEPTH Ⓒ:
  Infeed per cut.
  If the TOTAL HOLE DEPTH equals the PECKING DEPTH, the tool will drill to the programmed total hole depth in one operation.
  The PECKING DEPTH does not have to be a multiple of the TOTAL HOLE DEPTH.
  If the PECKING DEPTH is programmed greater than the TOTAL HOLE DEPTH, the tool only advances to the specified TOTAL HOLE DEPTH.
- DWELL TIME IN SECONDS:
  Amount of time the tool remains at the total hole depth for chip breaking.
- FEED RATE F:
  Traversing speed of the tool while drilling

**Calculations**

The advanced stop distance t is automatically calculated by the control:

- At a total hole depth of up to 30 mm: t = 0.6 mm
- At a total hole depth exceeding 30 mm: t = total hole depth / 50
  maximum advanced stop distance: 7 mm



Downloaded from www.Manualslib.com manuals search engine

**Example: Pecking**

Hole coordinates:

① X = 20 mm Y = 30 mm

② X = 80 mm Y = 50 mm

| | | |
|---|---|---|
| Hole diameter: | 6 | mm |
| Setup clearance: | 2 | mm |
| Total hole depth: | 15 | mm |
| Pecking depth: | 10 | mm |
| Dwell time: | 1 | s |
| Feed rate: | 80 | mm/min |

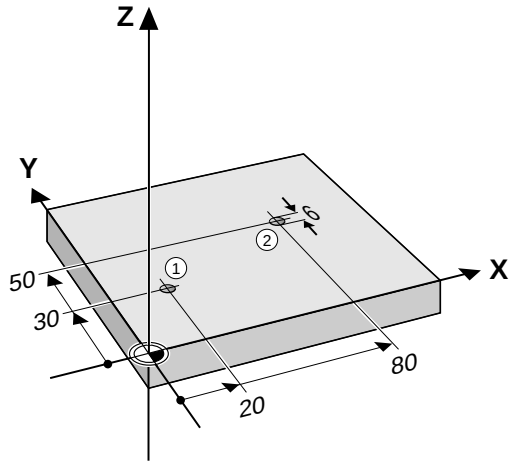


**PECKING cycle in a part program**

```
0  BEGIN PGM PECKING MM
1  BLK FORM 0.1 Z X+0 Y+0 Z–20
2  BLK FORM 0.2 X+100 Y+100 Z+0
3  TOOL DEF 1 L+0 R+3
4  TOOL CALL 1 Z S1000
5  CYCL DEF 1.0 PECKING
6  CYCL DEF 1.1 SET UP +2 ..... Setup clearance
7  CYCL DEF 1.2 DEPTH –15 ..... Total hole depth
8  CYCL DEF 1.3 PECKG +10 ..... Pecking depth
9  CYCL DEF 1.4 DWELL 1 ..... Dwell time
10 CYCL DEF 1.5 F 80 ..... Feed rate
11 L Z+100 R0 FMAX M6 ..... Approach tool change position
12 L X+20 Y+30 FMAX M3 ..... Pre-positioning for first hole, spindle ON
13 L Z+2 FMAX M99 ..... Pre-positioning in Z, 1st hole, cycle call
14 L X+80 Y+50 FMAX M99 ..... Approach 2nd hole, cycle call
15 L Z+100 FMAX M2
16 END PGM PECKING MM
```



Downloaded from www.Manualslib.com manuals search engine

## TAPPING with floating tap holder (Cycle 2)

### Process

- The tread is cut in one pass.
- Once the tool has reached the total hole depth, the direction of spindle rotation is reversed and the tool is retracted to the starting position at the end of the dwell time.
- At the starting position, the direction of spindle rotation is reversed once again.

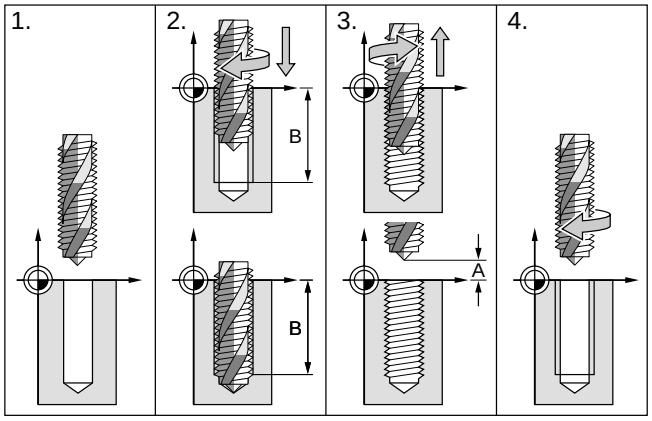


Fig. 8.2: TAPPING cycle

### Required tool

A floating tap holder is required for tapping. It must compensate the tolerances between feed rate and spindle speed during the tapping process.

### Input data

- SETUP CLEARANCE Ⓐ:
  Distance between tool tip (at starting position) and workpiece surface.
  Standard value: approx. 4 x thread pitch
- TOTAL HOLE DEPTH Ⓑ (thread length):
  Distance between workpiece surface and end of thread. The algebraic sign determines the working direction (a negative value means negative working direction).
- DWELL TIME:
  Enter a dwell time between 0 and 0.5 seconds to avoid wedging of the tool when retracted (further information is available from the machine manufacturer).
- FEED RATE F:
  Traversing speed of the tool during tapping.

### Calculations

The feed rate is calculated as follows:

$F = S \times p$

F: Feed rate (mm/min)
S: Spindle speed (rpm)
p: Thread pitch (mm)

- When a cycle is being run, the spindle speed override knob is disabled. The feed rate override knob is only active within a limited range (preset by the machine manufacturer).
- For tapping right-hand threads activate the spindle with M3, for left-hand threads use M4.



Downloaded from www.Manualslib.com manuals search engine

**Example: Tapping with a floating tap holder**

Cutting an M6 thread at 100 rpm

Tapping coordinates:

X = 50 mm Y = 20 mm

Pitch p = 1 mm

$F = S \times p \Rightarrow F = 100 \cdot 1 = 100$ mm/min

| | | |
|---|---|---|
| Setup clearance: | 3 | mm |
| Thread depth: | 20 | mm |
| Dwell time: | 0.4 | s |
| Feed rate: | 100 | mm/min |

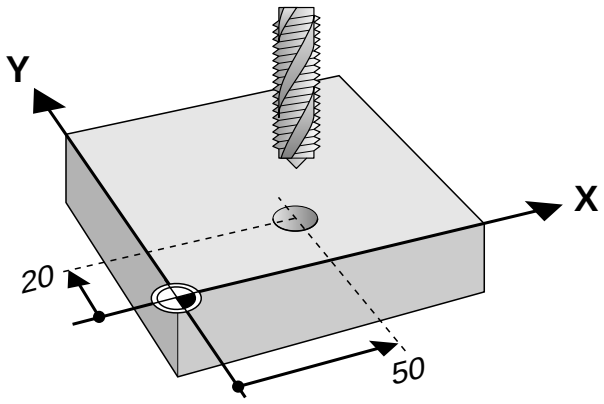


**TAPPING cycle in a part program**

```
0  BEGIN PGM TAPPING MM
1  BLK FORM 0.1 Z X+0 Y+0 Z–20
2  BLK FORM 0.2 X+100 Y+100 Z+0
3  TOOL DEF 1 L+0 R+3
4  TOOL CALL 1 Z S1000
5  CYCL DEF 2.0 TAPPING
6  CYCL DEF 2.1 SET UP +3 ..... Setup clearance
7  CYCL DEF 2.2 DEPTH –20 ..... Thread depth
8  CYCL DEF 2.3 DWELL 0.4 ..... Dwell time
9  CYCL DEF 2.4 F 100 ..... Feed rate
10 L Z+100 R0 F MAX M6 ..... Approach tool change position
11 L X+50 Y+20 F MAX M3 ..... Pre-positioning, spindle on, clockwise
12 L Z+3 F MAX M99 ..... Pre-positioning in Z, cycle call
13 L Z+100 F MAX M2
14 END PGM TAPPING MM
```



Downloaded from www.Manualslib.com manuals search engine

## RIGID TAPPING (Cycle 17)

The machine and control must be specially prepared by the machine manufacturer to enable rigid tapping.

Process
The thread is cut without a floating tap holder in one or more passes.

Rigid tapping offers the following benefits over tapping with a floating tap holder:

- Higher machining speeds
- Repeated tapping of the same thread; repetitions are made possible via spindle orientation to the 0° position during cycle call (depending on machine parameter 7160; see p.12-12).
- Increased traverse range of the spindle axis due to absence of a floating tap holder

- The TNC calculates the feed rate depending on the rpm. If the rpm override control is used during tapping, the feed rate will be automatically adjusted.
- The feed rate override control is not active.

**Input data**

- SETUP CLEARANCE Ⓐ:
  Distance between tool tip (at starting position) and workpiece surface.
- TAPPING DEPTH Ⓑ:
  Distance between workpiece surface (beginning of thread) and end of thread. The algebraic sign determines the working direction: a negative value means negative working direction.
- THREAD PITCH Ⓒ:
  The sign differentiates between right-hand and left-hand threads:
  + = right-hand thread
  – = left-hand thread

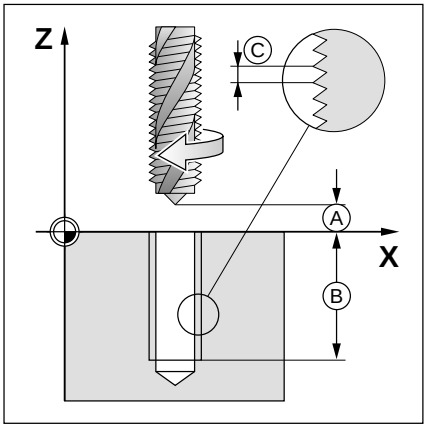


Fig. 8.3: Input data for RIGID TAPPING cycle



Downloaded from www.Manualslib.com manuals search engine

## THREAD CUTTING (Cycle 18)

The machine and control must be specially prepared by the machine manufacturer to enable thread cutting.

### Process

Cycle 18 THREAD CUTTING moves the tool with controlled spindle from the current position at the current rpm to the entered depth. The spindle is stopped at the floor of the hole. Approach and departure moves should be entered separately – preferably in an OEM cycle. Your machine manufacturer can give you more information on this.

### Input data:

- DEPTH Ⓐ:
  Distance between current tool position and end of thread.
  The sign of the depth determines the working direction
  (– means negative tool axis direction).
- PITCH Ⓑ:
  The sign determines right-hand and left-hand threads:
  + = Right-hand thread (M3 with negative DEPTH)
  – = Left-hand thread (M4 with negative DEPTH)

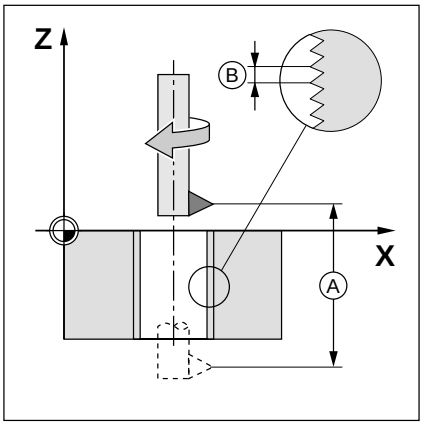


Fig. 8.4: Input data for THREAD CUTTING cycle

- The TNC calculates the feed rate depending on the rpm. If the rpm override control is used during thread cutting, the feed rate will be automatically adjusted.
- The feed rate override control is not active.
- The spindle is turned on and off automatically, so you don't have to program M3/M4 before the cycle call.



Downloaded from www.Manualslib.com manuals search engine

**Example: Thread cutting with single-point tool**

Cut thread M12 upwards in a through hole.

Coordinates of the holes:

X = 20 mm Y = 20 mm
X = 70 mm Y = 70 mm

| | | |
|---|---|---|
| Workpiece thickness: | 20 | mm |
| Pitch p: | 1.75 | mm |
| Speed: | 100 | rpm |
| Setup clearance above: | 5 | mm |
| Setup clearance below: | 5 | mm |

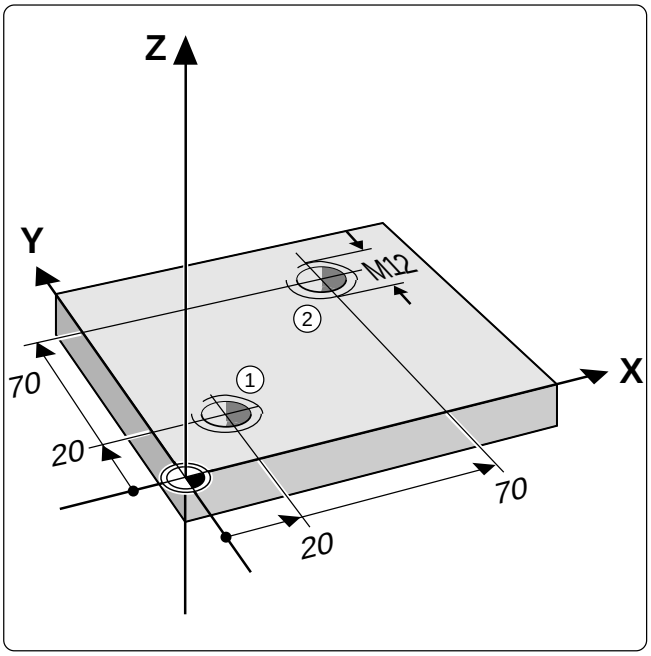


**THREAD CUTTING cycle in a part program**

```
0  BEGIN PGM C18 MM
1  BLK FORM 0.1 Z X+0 Y+0 Z–20
2  BLK FORM 0.2 X+100 Y+100 Z+0
3  TOOL DEF 1 L+0 R+6
4  TOOL CALL 1 Z S100
5  L Z+50 R0 FMAX
6  CYCL DEF 18.0 THREAD CUTTING
7  CYCL DEF 18.1 DEPTH +30 ..... Thread depth, positive direction
8  CYCL DEF 18.2 PITCH –1.75 ..... Thread pitch (since cutting direction is upwards)
9  L X+20 Y+20 R0 FMAX ..... Move to first hole in plane
10 CALL LBL 1 ..... Call subprogram
11 L X+70 Y+70 R0 FMAX ..... Move to second hole in plane
12 CALL LBL 1 ..... Call subprogram
13 L Z+100 R0 F MAX M2 ..... End of main program
14 LBL 1
15 CYCL DEF 13.0 ORIENTATION
16 CYCL DEF 13.1 ANGLE +0 ..... Orient spindle to 0° to allow repeated cutting
17 L IX–2 R0 F 1000 ..... Offset tool in plane for collision-free plunging (depending on
                          core diameter)
18 L Z+5 R0 F MAX ..... Pre-position at rapid traverse in tool axis to setup clearance
                        above workpiece
19 L Z–30 R0 F 1000 ..... Pre-position at rapid traverse in tool axis to starting point
                          below
20 L IX+2 ..... Move tool in plane to center of hole again
21 CYCL CALL ..... Call cycle
22 LBL 0 ..... End of subprogram
23 END PGM C18 MM
```



Downloaded from www.Manualslib.com manuals search engine

## SLOT MILLING (Cycle 3)

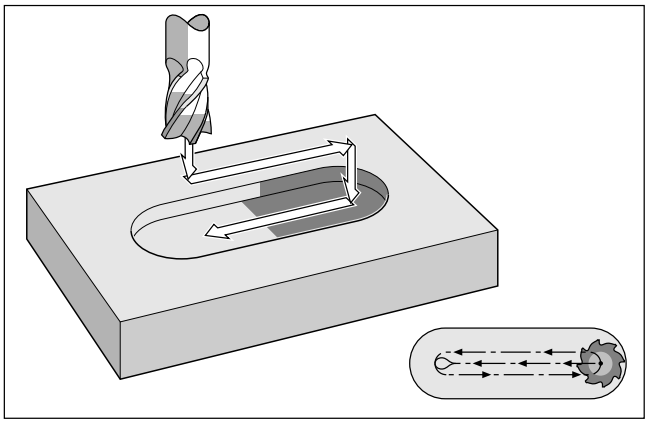

Fig. 8.5: SLOT MILLING cycle

### Process

Roughing process:

- The tool penetrates the workpiece from the starting position, offset by the oversize, then mills in the longitudinal direction of the slot.
- The oversize is calculated as: (slot width – tool diameter) / 2.
- After downfeed at the end of the slot, milling is performed in the opposite direction.
  This process is repeated until the programmed milling depth is reached.

Finishing process:

- The control advances the tool at the bottom of the slot on a tangential arc to the outside contour. The tool subsequently climb mills the contour (with M3).
- At the end of the cycle, the tool is retracted in rapid traverse to the setup clearance.
  If the number of infeeds was odd, the tool returns to the starting position at the level of the setup clearance in the main plane.

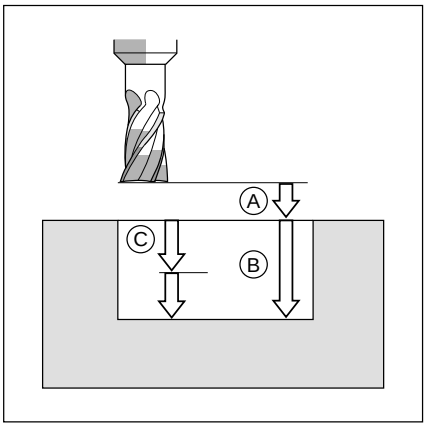


Fig. 8.6: Infeeds and distances for the SLOT MILLING cycle

### Required tool

This cycle requires a center-cut end mill (ISO 1641). The cutter diameter must be smaller than the slot width and larger than half the slot width. The slot must be parallel to an axis of the current coordinate system.

### Input data

- SETUP CLEARANCE Ⓐ
- MILLING DEPTH Ⓑ: Slot depth.
  The algebraic sign determines the working direction (a negative value means negative working direction).
- PECKING DEPTH Ⓒ
- FEED RATE FOR PECKING:
  Traversing speed of the tool during penetration
- FIRST SIDE LENGTH Ⓓ:
  Slot length, specify the sign to determine the first milling direction
- SECOND SIDE LENGTH Ⓔ:
  Slot width
- FEED RATE F:
  Traversing speed of the tool in the machining plane.

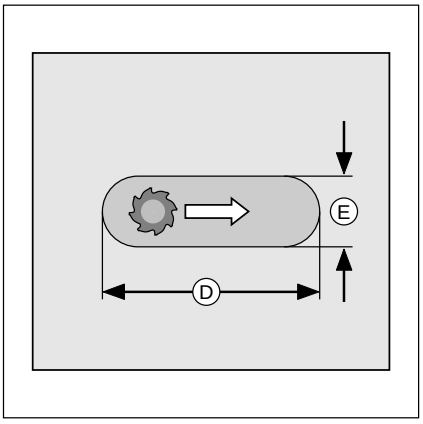


Fig. 8.7: Side lengths of the slot

### Starting point

At cycle call with **radius compensation R0,** the tool must be positioned:

- at setup clearance over the workpiece surface in the tool axis
- at the center of the slot (second side length) and offset by the tool radius within the slot in the working plane.



Downloaded from www.Manualslib.com manuals search engine

**Example: Slot milling**

A 50 mm x 10 mm horizontal slot and an 80 mm x 10 mm vertical slot are to be milled.

The tool radius in the length direction of the slot is taken into account for the starting position.

Starting position slot ①:
X = 76 mm Y = 15 mm

Starting position slot ②:
X = 20 mm Y = 14 mm

SLOT DEPTHS: 15 mm

Setup clearances: 2 mm

Milling depths: 15 mm

Pecking depths: 5 mm

Feed rates for pecking: 80 mm/min

| | ① | ② |
|---|---|---|
| Slot length | 50 mm | 80 mm |
| 1st milling direction | – | + |

Slot widths: 10 mm

Feed rates: 120 mm/min

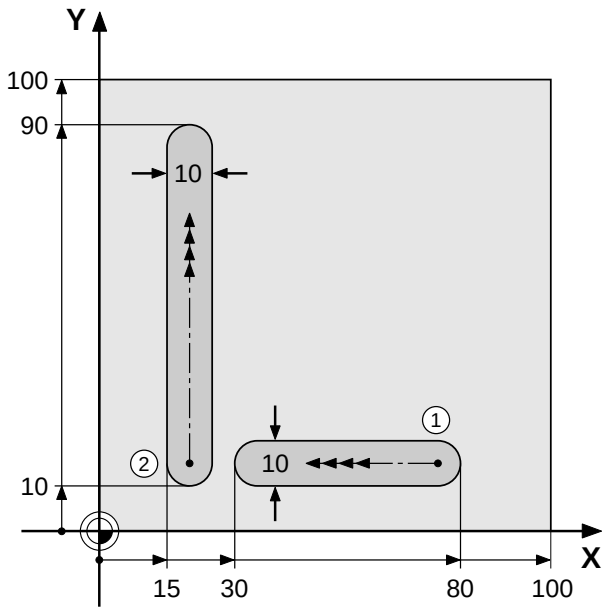


**SLOT MILLING cycle in a part program**

```
0  BEGIN PGM SLOTS MM
1  BLK FORM 0.1 Z X+0 Y+0 Z–20
2  BLK FORM 0.2 X+100 Y+100 Z+0
3  TOOL DEF 1 L+0 R+4
4  TOOL CALL 1 Z S1000
5  CYCL DEF 3.0 SLOT MILLING ..... Horizontal slot
6  CYCL DEF 3.1 SET UP –2 ..... Setup clearance
7  CYCL DEF 3.2 DEPTH –15 ..... Milling depth
8  CYCL DEF 3.3 PECKG –5 F80 ..... Pecking depth, feed rate for pecking
9  CYCL DEF 3.4 X–50 ..... Slot length and first milling direction (–)
10 CYCL DEF 3.5 Y+10 ..... Slot width
11 CYCL DEF 3.6 F120 ..... Feed rate
12 L Z+100 R0 F MAX M6
13 L X+76 Y+15 F MAX M3 ..... Approach starting position, spindle on
14 L Z+2 F1000 M99 ..... Pre-positioning Z, cycle call
15 CYCL DEF 3.0 SLOT MILLING ..... Vertical slot
16 CYCL DEF 3.1 SET UP +2 ..... Setup clearance
17 CYCL DEF 3.2 DEPTH –15 ..... Milling depth
18 CYCL DEF 3.3 PECKG –5 F80 ..... Pecking depth, feed rate for pecking
19 CYCL DEF 3.4 Y+80 ..... Slot length and first milling direction (+)
20 CYCL DEF 3.5 X+10 ..... Slot width
21 CYCL DEF 3.6 F120 ..... Feed rate
22 L X+20 Y+14 F MAX ..... Approach starting position
23 CYCL CALL ..... Cycle call
24 L Z+100 F MAX M2
25 END PGM SLOTS MM
```



Downloaded from www.Manualslib.com manuals search engine

## POCKET MILLING (Cycle 4)

### Process

The rectangular pocket milling cycle is a roughing cycle, in which

- the tool penetrates the workpiece at the starting position (pocket center)
- the tool subsequently follows the programmed path at the specified feed rate (see Fig. 8.9)

The cutter begins milling in the positive direction of the axis of the longer side. The cutter always starts in the positive Y direction on square pockets. At the end of the cycle, the tool is retracted to the starting position.

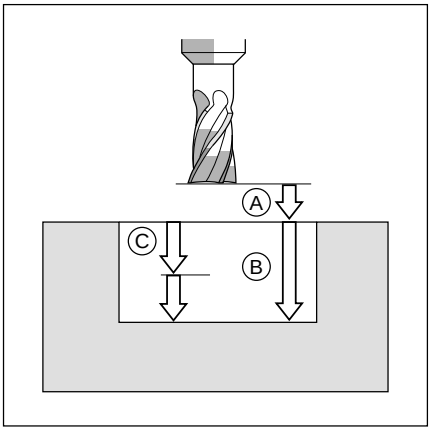


Fig. 8.8: Infeeds and distances for the POCKET MILLING cycle

### Required tool/limitations

The cycle requires a center-cut end mill (ISO 1641), or pilot drilling at the pocket center. The pocket sides are parallel to the axes of the coordinate system.

### Input data

- SETUP CLEARANCE Ⓐ
- MILLING DEPTH Ⓑ:
  The algebraic sign determines the working direction (a negative value means negative working direction).
- PECKING DEPTH Ⓒ
- FEED RATE FOR PECKING:
  Traversing speed of the tool during penetration.
- FIRST SIDE LENGTH Ⓓ:
  Pocket length, parallel to the first main axis of the machining plane.
- SECOND SIDE LENGTH Ⓔ:
  Pocket width
  The signs of the side lengths are always positive.
- FEED RATE F:
  Traversing speed of the tool in the machining plane.
- DIRECTION OF THE MILLING PATH:
  DR + : climb milling with M3
  DR – : up-cut milling with M3
- ROUNDING-OFF RADIUS:
  RADIUS for the pocket corners.
  If RADIUS = 0 is entered, the pocket corners will be rounded with the radius of the cutter.

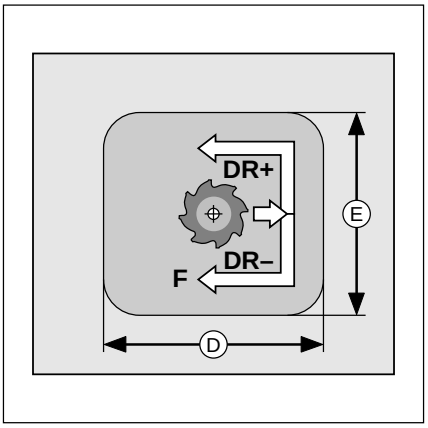


Fig. 8.9: Side lengths of the pocket

### Calculations

The stepover factor k is calculated as follows:

k = K x R

K: Overlap factor (preset by the machine manufacturer)
R: Cutter radius

Because of the roughing process the following condition must be met for the second side length:

2nd SIDE LENGTH > [(2 * ROUNDING RADIUS) + stepover factor k]

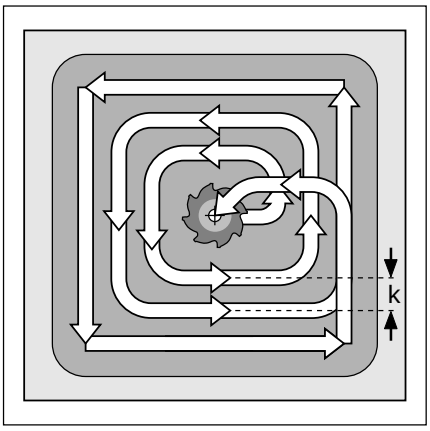


Fig. 8.10: Tool path for roughing-out

### Starting Point

At cycle call with **radius compensation R0,** the tool must be positioned:

- at setup clearance over the workpiece surface in the tool axis
- at the center of the pocket in the working plane



Downloaded from www.Manualslib.com manuals search engine

**Example: Rectangular pocket milling**

Pocket center coordinates:

X = 60 mm Y = 35 mm

| | | |
|---|---|---|
| Setup clearance: | 2 | mm |
| Milling depth: | 10 | mm |
| Pecking depth: | 4 | mm |
| Feed rate for pecking: | 80 | mm/min |
| First side length: | 80 | mm |
| Second side length: | 40 | mm |
| Milling feed rate: | 100 | mm/min |
| Direction of cutter path: | | + |

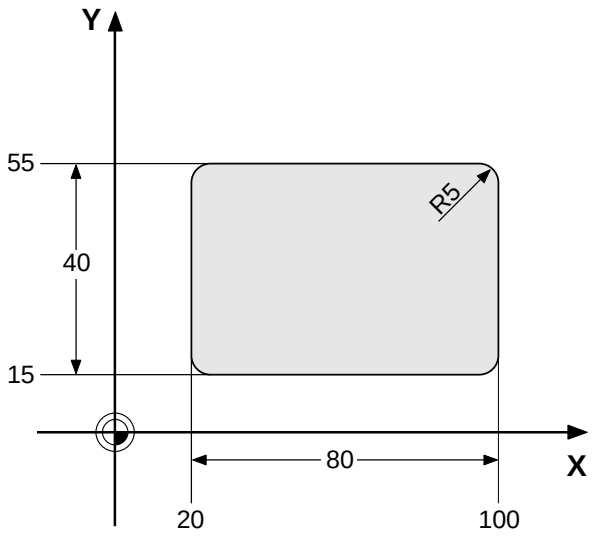


**POCKET MILLING cycle in a part program**

```
0  BEGIN PGM POCKET MM
1  BLK FORM 0.1 Z X+0 Y+0 Z–20
2  BLK FORM 0.2 X+110 Y+100 Z+0.....Note: BLK FORM has been changed!
3  TOOL DEF 1 L+0 R+5
4  TOOL CALL 1 Z S1000
5  CYCL DEF 4.0 POCKET MILLING
6  CYCL DEF 4.1 SET UP +2 ..... Setup clearance
7  CYCL DEF 4.2 DEPTH –10 ..... Milling depth
8  CYCL DEF 4.3 PECKG +4 F80 ..... Pecking depth and feed rate for pecking
9  CYCL DEF 4.4 X+80 ..... First side length of pocket
10 CYCL DEF 4.5 Y+40 ..... Second side length of pocket
11 CYCL DEF 4.6 F100 DR+ RADIUS 0 ..... Feed rate and direction of cutter path
12 L Z+100 R0 F MAX M6
13 L X+60 Y+35 F MAX M3 ..... Pre-positioning X and Y (pocket center), spindle on
14 L Z+2 F MAX ..... Pre-positioning Z
15 CYCL CALL ..... Cycle call
16 L Z+100 F MAX M2
17 END PGM POCKET MM
```



Downloaded from www.Manualslib.com manuals search engine

## CIRCULAR POCKET MILLING (Cycle 5)

### Process

- Circular pocket milling is a roughing cycle, in which the tool penetrates the workpiece from the starting position (pocket center).
- The cutter subsequently follows a spiral path (shown in Fig. 8.10) at the programmed feed rate. The stepover factor is determined by the value k (see Cycle 4, RECTANGULAR POCKET MILLING: Calculations).
- The process is repeated until the programmed milling depth is reached.
- At the end of the cycle, the tool is retracted to the starting position.

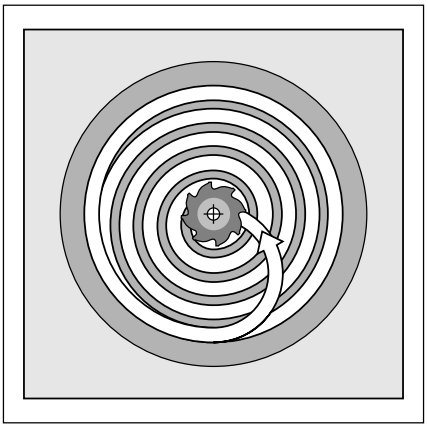

Fig. 8.11: Cutter path for roughing-out

### Required tool

The cycle requires a center-cut end mill (ISO 1641), or pilot drilling at the pocket center.

### Input data

- SETUP CLEARANCE Ⓐ
- MILLING DEPTH Ⓑ: pocket depth.
  The algebraic sign determines the working direction (a negative value means negative working direction).
- PECKING DEPTH Ⓒ
- FEED RATE FOR PECKING:
  Traversing speed of the tool during penetration
- CIRCLE RADIUS Ⓡ:
  Radius of the circular pocket
- FEED RATE F:
  Traversing speed of the tool in the machining plane
- DIRECTION OF THE MILLING PATH:
  DR + : climb milling with M3
  DR – : up-cut milling with M3

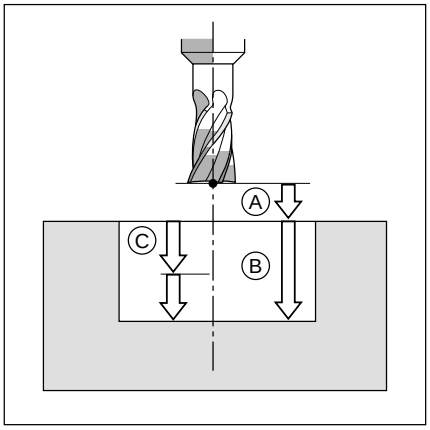


Fig. 8.12: Distances and infeeds for CIRCULAR POCKET MILLING

### Starting Point

At cycle call with **radius compensation R0,** the tool must be positioned:

- at setup clearance over the workpiece surface in the tool axis
- at the center of the pocket in the working plane

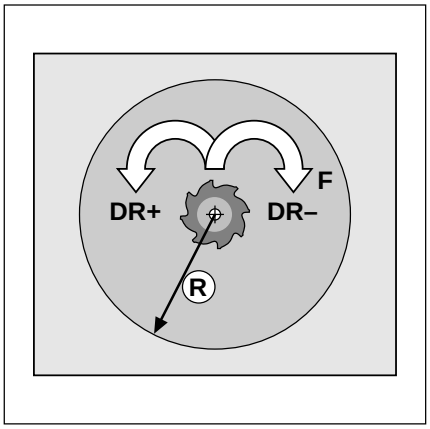


Fig. 8.13: Direction of the cutter path



Downloaded from www.Manualslib.com manuals search engine

**Example: Milling a circular pocket**

Pocket center coordinates:

X = 60 mm Y = 50 mm

| | | |
|---|---|---|
| Setup clearance: | 2 | mm |
| Milling depth: | 12 | mm |
| Pecking depth: | 6 | mm |
| Feed rate for pecking: | 80 | mm/min |
| Circle radius: | 35 | mm |
| Milling feed rate: | 100 | mm/min |
| Direction of the cutter path: | – | |

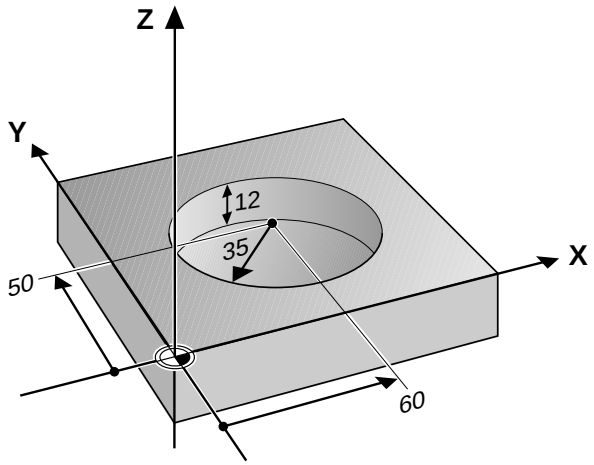


**CIRCULAR POCKET MILLING cycle in a part program**

```
0  BEGIN PGM CIRCULAR MM
1  BLK FORM 0.1 Z X+0 Y+0 Z–20
2  BLK FORM 0.2 X+100 Y+100 Z+0
3  TOOL DEF 1 L+0 R+10
4  TOOL CALL 1 Z S2000
5  CYCL DEF 5.0 CIRCULAR POCKET
6  CYCL DEF 5.1 SET UP +2 ..... Setup clearance
7  CYCL DEF 5.2 DEPTH –12 ..... Milling depth
8  CYCL DEF 5.3 PECKG +6 F80 ..... Pecking depth and feed rate for pecking
9  CYCL DEF 5.4 RADIUS 35 ..... Circle radius
10 CYCL DEF 5.5 F 100 DR– ..... Milling feed rate and direction of cutter path
11 L Z+100 R0 F MAX M6
12 L X+60 Y+50 F MAX M3 ..... Pre-positioning X and Y (pocket center), spindle on
13 L Z+2 F MAX M99 ..... Starting position in Z, cycle call
14 L Z+100 F MAX M2
15 END PGM CIRCULAR MM
```



Downloaded from www.Manualslib.com manuals search engine

## 8.3 SL Cycles (Group I)

SL cycles are highly efficient cycles that allow machining of any required contour. SL cycles have the following characteristics:

- A contour can be composed of several overlapping subcontours. Any islands or pockets can form a subcontour.
- The subcontours are defined in subprograms.
- The control automatically superimposes the subcontours and calculates the points of intersection formed by overlapping.

The term **SL** cycles is derived from the characteristic **S**ubcontour **L**ist of cycle 14, CONTOUR GEOMETRY. Since this is purely a geometry cycle, no intersection data or feed values are defined.

The machining data are specified in the following cycles:
- PILOT DRILLING (cycle 15)
- ROUGH-OUT (cycle 6)
- CONTOUR MILLING (cycle 16)

The SL cycles of group II offer further, contour-oriented machining processes and are described in the following section.

Each subprogram defines whether RL or RR radius compensation applies. The sequence of points determines the direction of rotation in which the contour is to be machined. The control deduces from these data whether the specific subprogram describes a pocket or an island:

- The control recognizes a pocket if the tool path lies inside the contour,
- and an island if the tool path lies outside the contour.

- The machining of the SL contour is determined by MP 7420.
- Please be sure to run a graphic simulation before executing a program to see whether the contours were correctly defined
- Memory is limited for SL cycles. In one SL cycle, for example, 128 straight line blocks can be programmed.
- All coordinate transformations are allowed in programming the subcontours.
- Any words starting with F or M in the subprograms for the subcontours are ignored.

For easier familiarization, the following examples begin with only the rough-out cycle and then proceed progressively to the full range of functions provided by this group of cycles.

**Programming parallel axes**

Machining operations can also be programmed in parallel axes as SL cycles. (In this case, graphic simulation is not available). The parallel axes must lie in the machining plane.

**Input data**

Parallel axes are programmed in the first coordinate block (positioning block, CC block) of the first subprogram called in cycle 14 CONTOUR GEOMETRY. Coordinate axes entered subsequently will be ignored.



Downloaded from www.Manualslib.com manuals search engine

## CONTOUR GEOMETRY (Cycle 14)

### Application

All subprograms that are superimposed to define the contour are listed in cycle 14 CONTOUR GEOMETRY.

### Input data

Enter the LABEL numbers of the subprograms. Up to 12 label numbers can be defined.

### Activation

Cycle 14 is immediately effective upon definition.

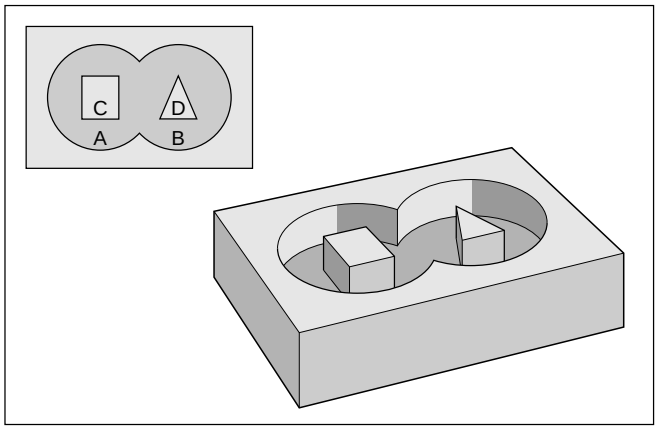


Fig. 8.14: Example of an SL contour: A, B = pockets; C, D = islands

**Example:**

```
TOOL DEF 3 L+0 R+3.5
TOOL CALL 3 Z S1500 ..... Machining plane perpendicular to Z axis
CYCL DEF 14.0 CONTOUR GEOM.
CYCL DEF 14.1 CONTOUR LABEL 1/2/3
  .
  .
  .
L Z+100 R0 FMAX M2
  .
  .
  .
LBL 1 ..... First contour label of cycle 14 CONTOUR GEOMETRY
L X+0 Y+10 RR F150 M3 ..... Machining in the X/Y plane
L X+20 Y+10
CC X+50 Y+50
```



Downloaded from www.Manualslib.com manuals search engine

## ROUGH-OUT (Cycle 6)

### Process

Cycle 6 specifies cutting path and partitioning.

- The control positions the tool in the tool axis over the first infeed point, taking the finishing allowance into account.
- The tool then penetrates the workpiece at the programmed feed rate for pecking.

Milling the contour:

- The tool mills the first subcontour at the specified feed rate, taking the finishing allowance into account.
- As soon as the tool returns to the infeed point, it is advanced to the next pecking depth.

This process is repeated until the programmed milling depth is reached.

- Further subcontours are milled in the same manner.

Roughing-out pockets:

- After milling the contour the pocket is roughed-out. The stepover is defined by the tool radius.
  Islands are jumped over.
- If required, pockets can be cleared with several downfeeds.
- At the end of the cycle, the tool is retracted to the setup clearance in the tool axis. The tool then returns to the starting position in the machining plane at the level of the setup clearance.

### Required tool

The cycle requires a center-cut end mill (ISO 1641) if the pocket is not separately pilot drilled or if the tool must repeatedly jump over contours.

### Input data

- SETUP CLEARANCE Ⓐ
- MILLING DEPTH Ⓑ
  The algebraic sign determines the working direction (a negative value means negative working direction).
- PECKING DEPTH Ⓒ
- FEED RATE FOR PECKING:
  Traversing speed of the tool during penetration
- FINISHING ALLOWANCE Ⓓ:
  Allowance in the machining plane (positive value)
- ROUGH-OUT ANGLE (α):
  Feed direction for roughing-out.
  The rough-out angle is relative to the angle reference axis and can be set, so that the resulting cuts are as long as possible with few cutting movements.
- FEED RATE F:
  Traversing speed of the tool in the machining plane

The machine parameters determine whether

- the contour is milled first and then surface machined, or vice versa
- the contour is milled conventionally or by climb cutting
- all pockets are roughed-out first and then contour-milled over all infeeds (or vice versa), or whether
- contour milling and roughing- out are performed mutually for each infeed

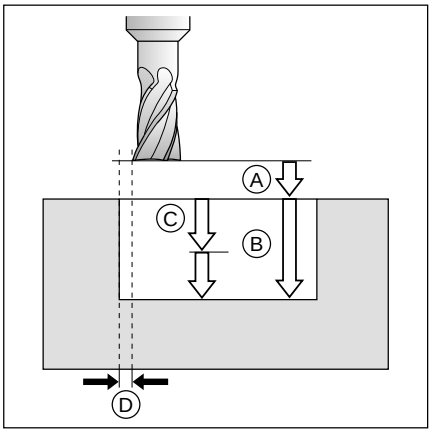


Fig. 8.15: Infeeds and distances of the ROUGH-OUT cycle

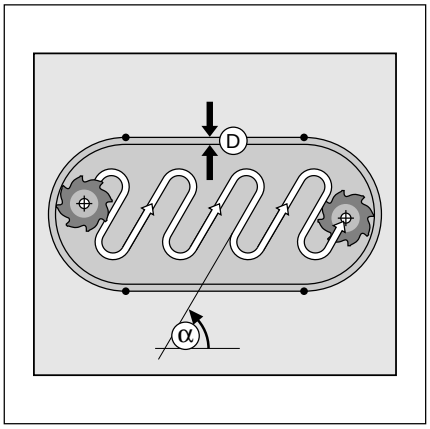


Fig. 8.16: Cutter path for roughing-out



Downloaded from www.Manualslib.com manuals search engine

**Example: Roughing-out a rectangular pocket**

**Rectangular pocket with rounded corners**

Tool: center-cut end mill (ISO 1641), radius 5 mm

Coordinates of the island corners:

| | X | | Y | |
|---|---|---|---|---|
| ① | 70 | mm | 60 | mm |
| ② | 15 | mm | 60 | mm |
| ③ | 15 | mm | 20 | mm |
| ④ | 70 | mm | 20 | mm |

Coordinates of the auxiliary pocket:

| | X | | Y | |
|---|---|---|---|---|
| ⑥ | –5 | mm | –5 | mm |
| ⑦ | 105 | mm | –5 | mm |
| ⑧ | 105 | mm | 105 | mm |
| ⑨ | –5 | mm | 105 | mm |

Starting point for machining:

⑤ X = 40 mm Y = 60 mm

| | | |
|---|---|---|
| Setup clearance: | 2 | mm |
| Milling depth: | 15 | mm |
| Pecking depth: | 8 | mm |
| Feed rate for pecking: | 100 | mm/min |
| Finishing allowance: | 0 | |
| Rough-out angle: | 0° | |
| Milling feed rate: | 500 | mm/min |

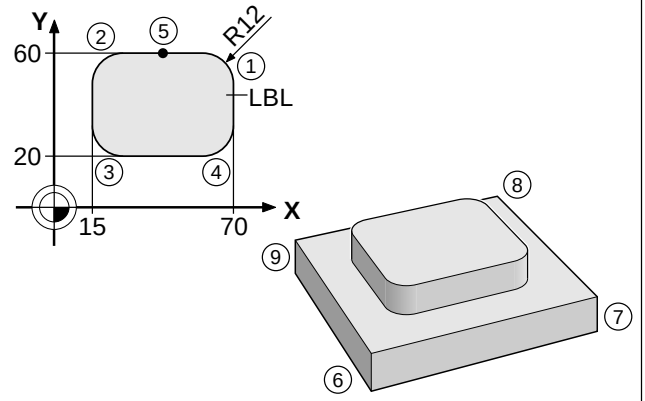


**Cycle in a part program**

```
0  BEGIN PGM ROUGH MM
1  BLK FORM 0.1 Z X+0 Y+0 Z–20
2  BLK FORM 0.2 X+100 Y+100 Z+0
3  TOOL DEF 1 L+0 R+3
4  TOOL CALL 1 Z S1000
5  CYCL DEF 14.0 CONTOUR GEOM.
6  CYCL DEF 14.1 CONTOUR LABEL 2/1
7  CYCL DEF 6.0 ROUGH-OUT ..... Cycle definition ROUGH-OUT
8  CYCL DEF 6.1 SET UP +2 DEPTH –15
9  CYCL DEF 6.2 PECKG +8 F100 ALLOW +0
10 CYCL DEF 6.3 ANGLE +0 F500
11 L Z+100 R0 F MAX M6
12 L X+40 Y+50 F MAX M3 ..... Pre-positioning X and Y, spindle on
13 L Z+2 F MAX M99 ..... Pre-positioning Z, cycle call
14 L Z+100 F MAX M2
15 LBL 1
16 L X+40 Y+60 RR
17 L X+15
18 RND R12
19 L Y+20
20 RND R12
21 L X+70
22 RND R12
23 L Y+60
24 RND R12
25 L X+40
26 LBL 0
27 LBL 2
28 L X–5 Y–5 RL
29 L X+105
30 L Y+105
31 L X–5
32 L Y–5
33 LBL 0
34 END PGM ROUGH MM
```

Subprogram 1:
Geometry of the island
(From radius compensation RR and counterclockwise machining direction, the control deduces that contour element 1 is an island)

Subprogram 2:
Geometry of the auxiliary pocket:
External limitation of the machined surface
(From radius compensation RL and counter-clockwise machining direction, the control deduces that contour element 2 is a pocket)



Downloaded from www.Manualslib.com manuals search engine

## Overlapping contours

Pockets and islands can be overlapped to form a new contour. The area of a pocket can thus be enlarged by another pocket or reduced by an island.

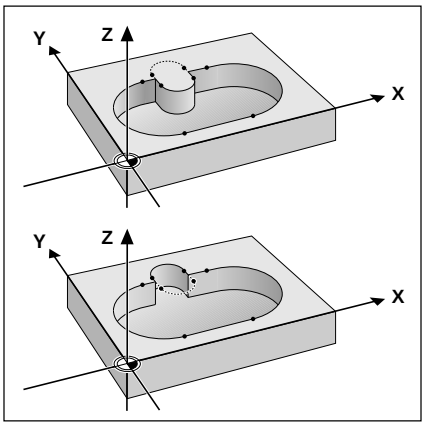


Fig. 8.17: Example for overlapping contours

### Starting position

Machining begins at the starting position of the first pocket listed in cycle 14 CONTOUR GEOMETRY. The starting position should be located as far as possible from the superimposed contours.

### Example: Overlapping pockets

The machining process starts with the first contour label defined in block 6. The first pocket must begin outside the second pocket.

Inside machining with a center-cut end mill (ISO 1641), tool radius: 3 mm

Coordinates of the circle centers:

① X = 35 mm Y = 50 mm
② X = 65 mm Y = 50 mm

Circle radii

R = 25 mm

| | | |
|---|---|---|
| Setup clearance: | 2 | mm |
| Milling depth: | 10 | mm |
| Pecking depth: | 5 | mm |
| Feed rate for pecking: | 500 | mm/min |
| Finishing allowance: | 0 | |
| Rough-out angle: | 0 | |
| Milling feed rate: | 500 | mm/min |

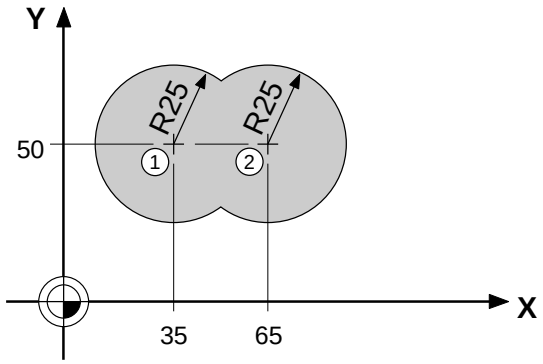


Continued...



Downloaded from www.Manualslib.com manuals search engine

**Cycle in a part program**

```
0   BEGIN PGM OVERL1 MM
1   BLK FORM 0.1 Z X+0 Y+0 Z–20
2   BLK FORM 0.2 X+100 Y+100 Z+0
3   TOOL DEF 1 L+0 R+3
4   TOOL CALL 1 Z S1000
5   CYCL DEF 14.0 CONTOUR GEOM.
6   CYCL DEF 14.1 CONTOUR LABEL 1/2 ..... "List" of the contour subprograms
7   CYCL DEF 6.0 ROUGH-OUT ..... Cycle definition ROUGH-OUT
8   CYCL DEF 6.1 SET UP +2 DEPTH –10
9   CYCL DEF 6.2 PECKG +5 F500 ALLOW +0
10  CYCL DEF 6.3 ANGLE +0 F500
11  L Z+100 R0 F MAX M6
12  L X+50 Y+50 F MAX M3 ..... Pre-positioning X and Y, spindle on
13  L Z+2 F MAX M99 ..... Setup clearance Z, cycle call
14  L Z+100 F MAX M2 ..... Retract, rapid return to start of program
15  LBL 1
      .
      .
      .
19  LBL 0
20  LBL 2                    } Subprograms listed on page 8-23 and 8-24 can be
      .                      } entered in these blocks
      .                      }
      .                      }
24  LBL 0
25  END PGM OVERL1 MM
```

**Subprograms: Overlapping pockets**

The pocket elements A and B overlap.
The control automatically calculates the points of intersection S1 and S2, they do not have to be programmed.
The pockets are programmed as full circles.

```
15  LBL 1
16  L X+10 Y+50 RL
17  CC X+35 Y+50
18  C X+10 Y+50 DR+
19  LBL 0
```

A Left pocket

```
20  LBL 2
21  L X+90 Y+50 RL
22  CC X+65 Y+50
23  C X+90 Y+50 DR+
24  LBL 0
25  END PGM OVERL1 MM
```

B Right pocket

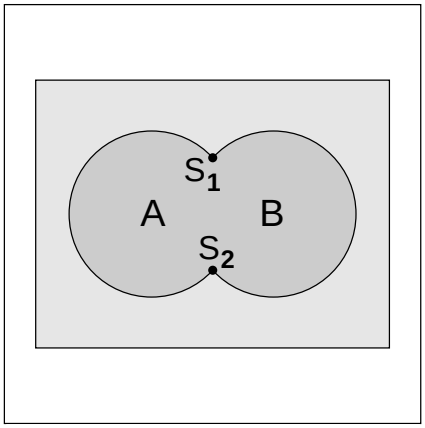


Fig. 8.18: Points of intersection $S_1$ and $S_2$ of pockets A and B

Depending on the control setup (machine parameters), machining starts either with the outline or the surface:

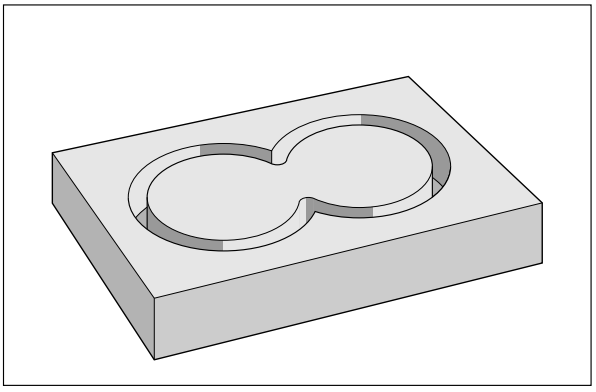

Fig. 8.19: Outline is machined first

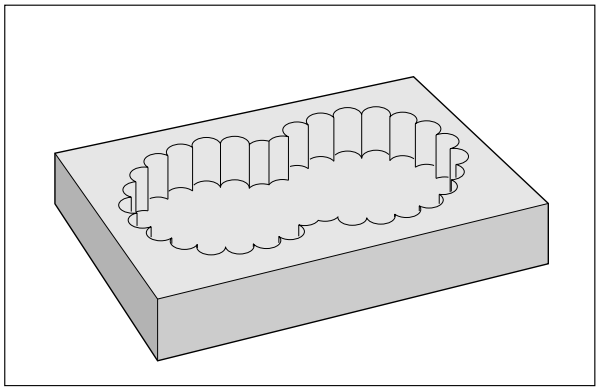

Fig. 8.20: Surface is machined first



Downloaded from www.Manualslib.com manuals search engine

### Area of inclusion

Both areas (Element A and Element B) are to be machined including the mutually overlapped surface.

- A and B must be pockets.
- The first pocket (in cycle 14) must start outside the second pocket.

```
15  LBL 1
16  L X+10 Y+50 RL
17  CC X+35 Y+50
18  C X+10 Y+50 DR+
19  LBL 0

20  LBL 2
21  L X+90 Y+50 RL
22  CC X+65 Y+50
23  C X+90 Y+50 DR+
24  LBL 0
```

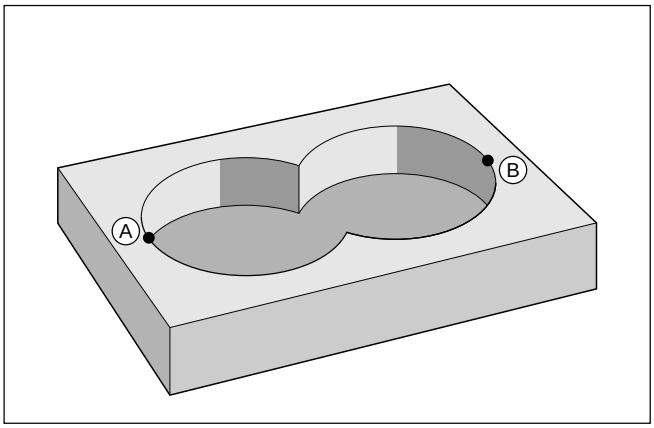

Fig. 8.21: Overlapping pockets: area of inclusion

### Area of exclusion

Surface A is to be machined without the portion overlapped by B:

- A must be a pocket and B an island.
- A must start outside of B.

```
15  LBL 1
16  L X+10 Y+50 RL
17  CC X+35 Y+50
18  C X+10 Y+50 DR+
19  LBL 0

20  LBL 2
21  L X+90 Y+50 RR
22  CC X+65 Y+50
23  C X+90 Y+50 DR+
24  LBL 0
```

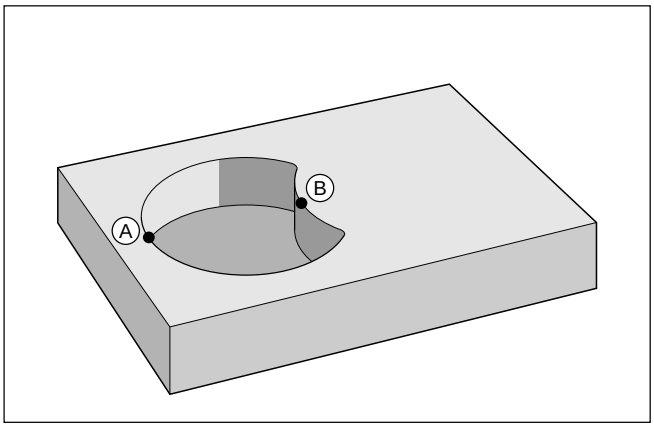

Fig. 8.22: Overlapping pockets: area of exclusion

### Area of intersection

Only the area mutually overlapped by A and B is to be machined.

- A and B must be pockets.
- A must start inside B.

```
15  LBL 1
16  L X+60 Y+50 RL
17  CC X+35 Y+50
18  C X+60 Y+50 DR+
19  LBL 0

20  LBL 2
21  L X+90 Y+50 RL
22  CC X+65 Y+50
23  C X+90 Y+50 DR+
24  LBL 0
```

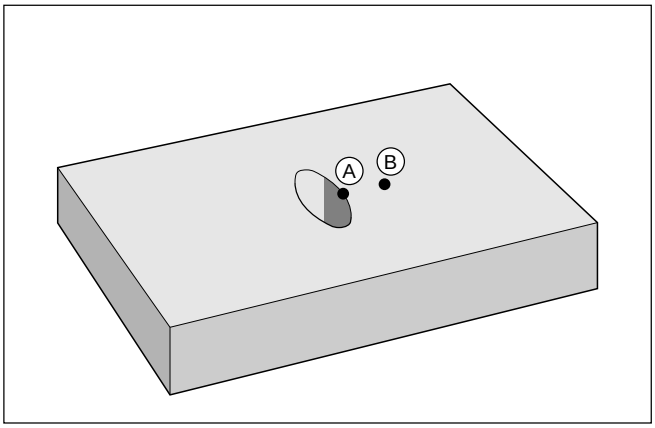

Fig. 8.23: Overlapping pockets: area of intersection

The subprograms are used in the main program on page 8-23.



Downloaded from www.Manualslib.com manuals search engine

**Subprogram: Overlapping islands**

```
0   BEGIN PGM OVERL2 MM
1   BLK FORM 0.1 Z X+0 Y+0 Z–20
2   BLK FORM 0.2 X+100 Y+100 Z+0
3   TOOL DEF 1 L+0 R+2.5
4   TOOL CALL 1 Z S1000
5   CYCL DEF 14.0 CONTOUR GEOM.
6   CYCL DEF 14.1 CONTOUR LABEL 2/3/1
7   CYCL DEF 6.0 ROUGH-OUT
8   CYCL DEF 6.1 SET UP +2 DEPTH –10
9   CYCL DEF 6.2 PECKG +5 F500 ALLOW +0
10  CYCL DEF 6.3 ANGLE +0 F500
11  L Z+100 R0 F MAX M6
12  L X+50 Y+50 F MAX M3
13  L Z+2 F MAX M99
14  L Z+100 F MAX M2
15  LBL 1
16  L X+5 Y+5 RL
17  L X+95
18  L Y+95
19  L X+5
20  L Y+5
21  LBL 0
22  LBL 2

26  LBL 0
27  LBL 3
    .
    .

31  LBL 0
32  END PGM OVERL2 MM
    .
    .
```

**Area of inclusion**

Elements A and B are to be left unmachined including the mutually overlapped surface:

- A and B must be islands.
- The first island must start outside the second island.

```
22  LBL 2
23  L X+10 Y+50 RR
24  CC X+35 Y+50
25  C X+10 Y+50 DR+
26  LBL 0
27  LBL 3
28  L X+90 Y+50 RR
29  CC X+65 Y+50
30  C X+90 Y+50 DR+
31  LBL 0
32  END PGM OVERL2 MM
```

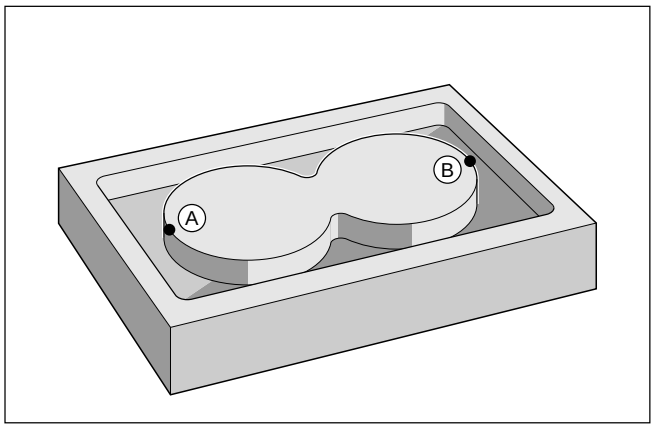


Fig. 8.23: Overlapping islands: area of inclusion

The subprograms and supplements are entered in the main program on page 8-25.



Downloaded from www.Manualslib.com manuals search engine

### Area of exclusion

Surface A is to be left unmachined without the portion overlapped by B:

- A must be an island and B a pocket.
- B must lie within A.

```
22  LBL 2
23  L X+10 Y+50 RR
24  CC X+35 Y+50
25  C X+10 Y+50 DR+
26  LBL 0
27  LBL 3
28  L X+40 Y+50 RL
29  CC X+65 Y+50
30  C X+40 Y+50 DR+
31  LBL 0
32  END PGM OVERL2 MM
```

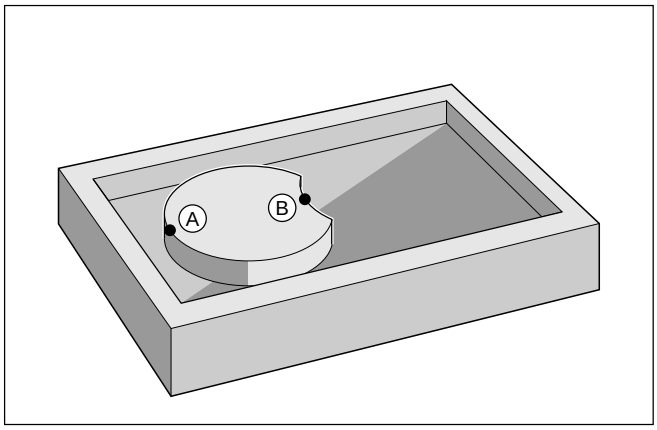


Fig. 8.25: Overlapping islands: area of exclusion

### Area of intersection

The area mutually overlapped by A and B is to remain unmachined.

- A and B must be islands.
- A must start within B.

```
22  LBL 2
23  L X+60 Y+50 RR
24  CC X+35 Y+50
25  C X+60 Y+50 DR+
26  LBL 0
27  LBL 3
28  L X+90 Y+50 RR
29  CC X+65 Y+50
30  C X+90 Y+50 DR+
31  LBL 0
32  END PGM OVERL2 MM
```

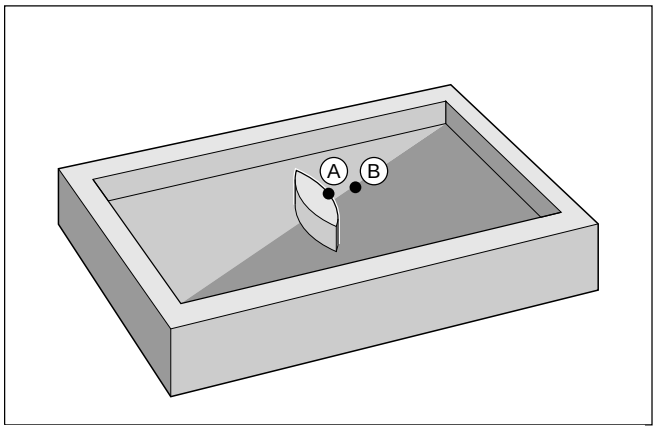


Fig. 8.26: Overlapping islands: area of intersection



Downloaded from www.Manualslib.com manuals search engine

**Example: Overlapping pockets and islands**

PGM OVERL3 is an expansion of PGM OVERL1 for the inside pockets C and D

Tool: Center-cut end mill (ISO 1641), radius 3 mm

The contour is composed of the elements

A and B, i.e. two overlapping pockets, as well as C and D, i.e. two islands

located inside these pockets.

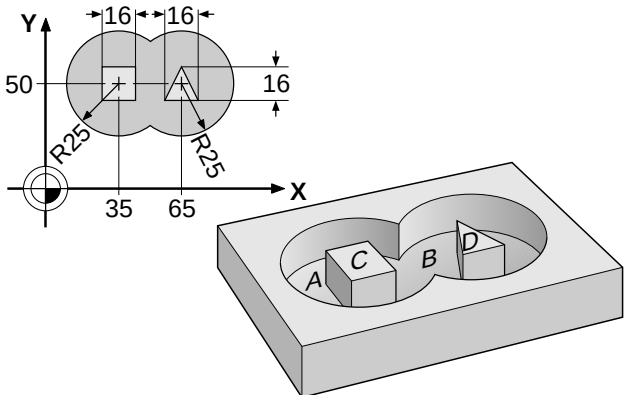


**Cycle in a part program**

```
0   BEGIN PGM OVERL3 MM
1   BLK FORM 0.1 Z X+0 Y+0 Z–20
2   BLK FORM 0.2 X+100 Y+100 Z+0
3   TOOL DEF 1 L+0 R+3
4   CYCL DEF 14.0 CONTOUR GEOM.
5   CYCL DEF 14.1 CONTOUR LABEL 1/2/3/4
6   CYCL DEF 6.0 ROUGH-OUT
7   CYCL DEF 6.1 SET UP +2 DEPTH –10
8   CYCL DEF 6.2 PECKG +5 F100 ALLOW +2
9   CYCL DEF 6.3 ANGLE +0 F100
10  TOOL CALL 1 Z S1000
11  L Z+100 R0 F MAX M6
12  L Z+2 R0 F MAX M3
13  CYCL CALL
14  L Z+100 R0 F MAX M2
15  LBL 1
16  L X+10 Y+50 RL
17  CC X+35 Y+50
18  C X+10 Y+50 DR+
19  LBL 0
20  LBL 2
21  L X+90 Y+50 RL
22  CC X+65 Y+5 0
23  C X+90 Y+50 DR+
24  LBL 0
```

Continued...



Downloaded from www.Manualslib.com manuals search engine

```
15  LBL 1
      .
      .
      .
19  LBL 0
20  LBL 2
      .
      .
      .
24  LBL 0
25  LBL 3
26  L X+27 Y+42 RL
27  L Y+58
28  L X+43
29  L Y+42
30  L X+27
31  LBL 0
32  LBL 4
33  L X+57 Y+42 RR
34  L X+73
35  L X+65 Y+58
36  L X+57 Y+42
37  LBL 0
38  END PGM OVERL3 MM
```

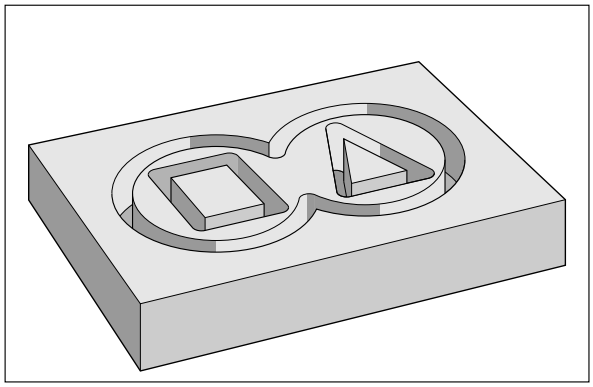

Fig. 8.27: Milling of outline

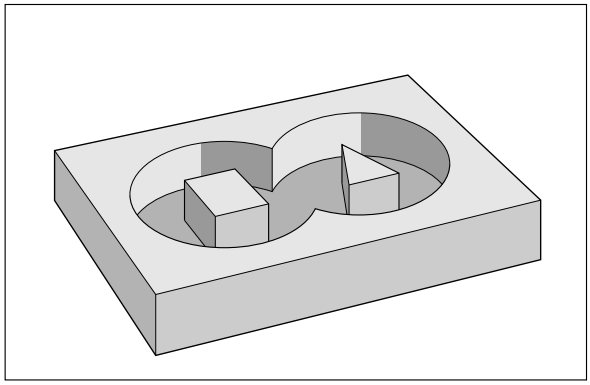

Fig. 8.28: Finished piece



Downloaded from www.Manualslib.com manuals search engine

## PILOT DRILLING (Cycle 15)

### Process

Pilot drilling of holes for cutter infeed at the starting points of the subcontours. With SL contours consisting of several overlapping pockets and islands, the cutter infeed point is the starting point of the first subcontour:

- The tool is positioned at setup clearance over the first infeed point.
- The drilling sequence is identical with fixed cycle 1, PECKING.
- Subsequently, the tool is positioned above the second infeed point, and the drilling process is repeated.

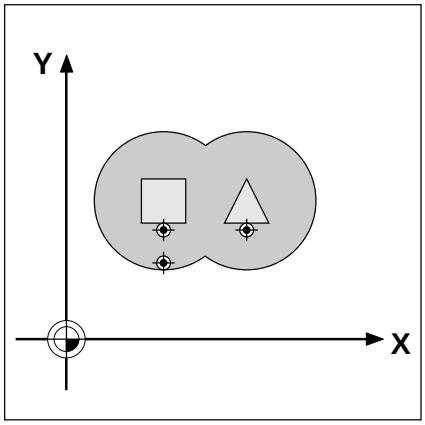


Fig. 8.29: Example of cutter infeed points for PECKING

### Input data

- SETUP CLEARANCE
- TOTAL HOLE DEPTH
- PECKING DEPTH
- FEED RATE F

} identical with cycle 1 PECKING

- FINISHING ALLOWANCE (D)
  Allowed material for the drilling operation (see Fig. 8.29)
  The sum of tool radius and finishing allowance should remain the same for pilot drilling and roughing out.

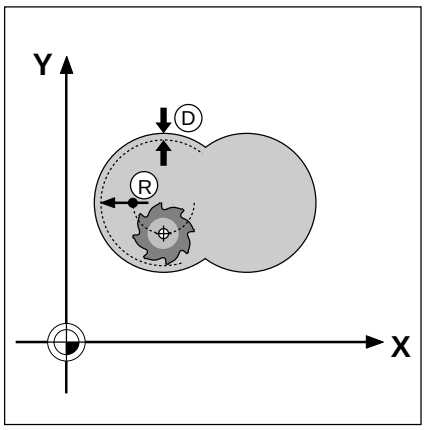


Fig. 8.30: Finishing allowance



Downloaded from www.Manualslib.com manuals search engine

## CONTOUR MILLING (Cycle 16)

Cycle 16 CONTOUR MILLING is used to finish-mill the contour pocket. The cycle can also be used generally for milling contours.

### Process

- The tool is positioned at setup clearance over the first starting point
- Moving at the programmed feed rate, the tool then penetrates to the first pecking depth
- On reaching the first pecking depth, the tool mills the first contour at the programmed feed rate in the specified direction of rotation
- At the infeed point, the control advances the tool to the next pecking depth

The process is repeated until the programmed milling depth is reached. The remaining subcontours are milled in the same manner.

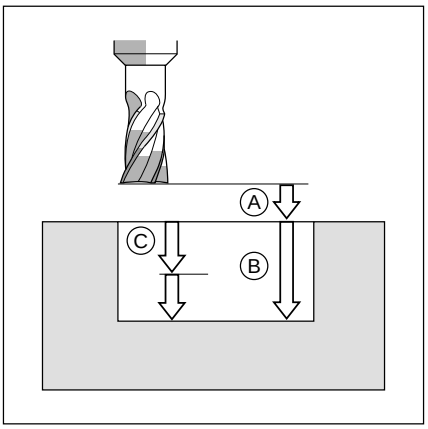


Fig. 8.31: Infeeds and distances for CONTOUR MILLING

### Required tool

The cycle requires a center-cut end mill (ISO 1641).

### Input data

- SETUP CLEARANCE Ⓐ
- MILLING DEPTH Ⓑ
  The algebraic sign determines the working direction (a negative value means negative working direction).
- PECKING DEPTH Ⓒ
- FEED RATE FOR PECKING:
  Traversing speed of the tool during penetration
- DIRECTION OF ROTATION FOR CONTOUR MILLING:
  For M3 there is DR+: climb milling for pocket and island
  DR–: up-cut milling for pocket and island
- FEED RATE F:
  Traversing speed of the tool in the machining plane

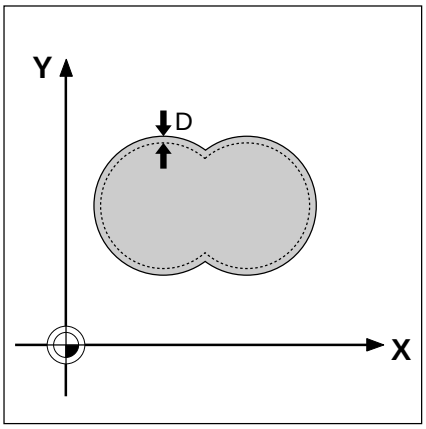


Fig. 8.32: Finishing allowance



Downloaded from www.Manualslib.com manuals search engine

The following scheme illustrates the application of the SL cycles pilot drilling, rough-out and contour milling in part programming:

**1. List of contour subprograms**

CYCL DEF 14.0 CONTOUR GEOM.
No call!

**2. Drilling**

Define and call the drilling tool
CYCL DEF 15.0 PILOT DRILLING
Pre-positioning
Cycle call!

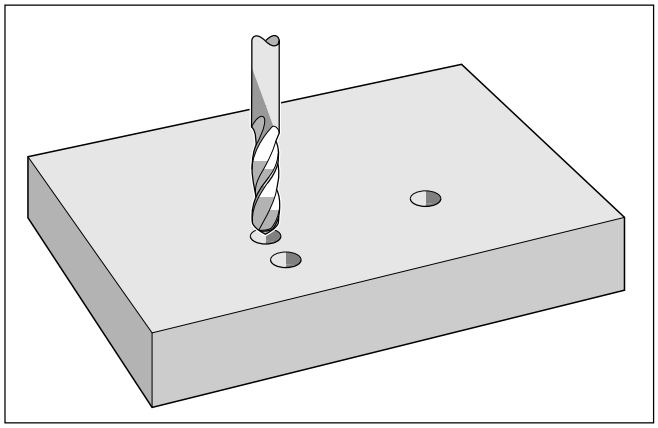

Fig. 8.33: PILOT DRILLING cycle

**3. Rough-out**

Define and call rough milling tool
CYCL DEF 6.0 ROUGH-OUT
Pre-positioning
Cycle call!

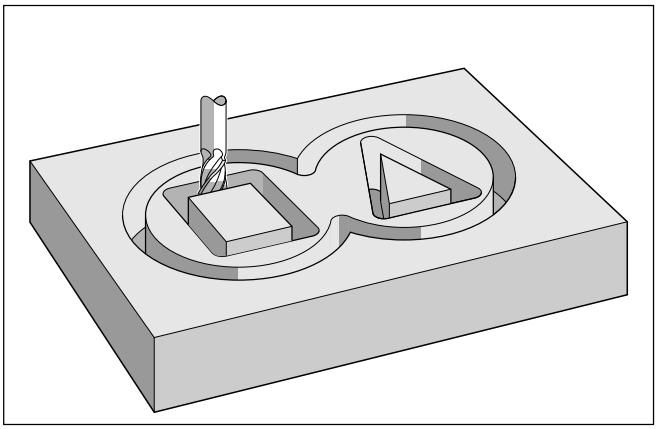

Fig. 8.34: ROUGH-OUT cycle

**4. Finishing**

Define and call finish milling tool
CYCL DEF 16.0 CONTOUR MILLING
Pre-positioning
Cycle call!

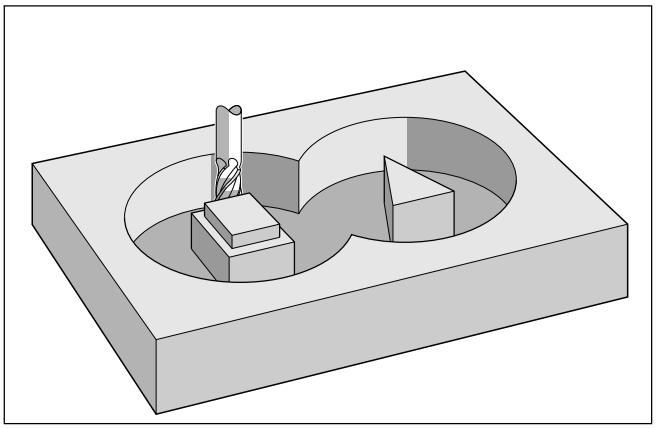

Fig. 8.35: CONTOUR MILLING cycle

**5. Contour subprograms**

STOP M02
Subprograms for the subcontours



Downloaded from www.Manualslib.com manuals search engine

**Example: Overlapping pockets with islands**

Inside machining with pilot drilling, roughing-out and finishing.

PGM OVERL4 builds on OVERL3:

The main program section is expanded by the cycle definitions and calls for pilot drilling and finishing.

The contour subprograms 1 to 4 are identical to the ones in PGM OVERL3 (see pages 8-27 and 8-28) and are to be added after block 39.

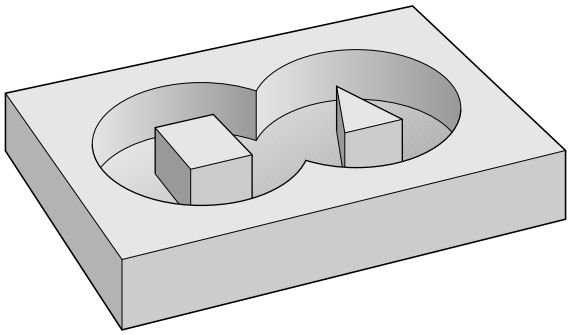

```
0  BEGIN PGM OVERL4 MM
1  BLK FORM 0.1 Z X+0 Y+0 Z–20
2  BLK FORM 0.2 X+100 Y+100 Z+0
3  TOOL DEF 1 L+0 R+2.2 ..... Drill
4  TOOL DEF 2 L+0 R+3 ..... Rough mill
5  TOOL DEF 3 L+0 R+2.5 ..... Finish mill
6  CYCL DEF 14.0 CONTOUR GEOM.
7  CYCL DEF 14.1 CONTOUR LABEL 1/2/3/4
8  CALL LBL 10

9  STOP M6
10 TOOL CALL 1 Z S 2500
11 CYCL DEF 15.0 PILOT DRILL ..... Pilot drill
12 CYCL DEF 15.1 SET UP +2 DEPTH –10
13 CYCL DEF 15.2 PECKG +5 F500 ALLOW +2
14 L Z+2 R0 F MAX
15 CYCL CALL M3
16 CALL LBL 10

17 STOP M6
18 TOOL CALL 2 Z S 1750
19 CYCL DEF 6.0 ROUGH-OUT ..... Rough-out
20 CYCL DEF 6.1 SET UP +2 DEPTH –10
21 CYCL DEF 6.2 PECKG +5 F100 ALLOW +2
22 CYCL DEF 6.3 ANGLE +0 F500
23 L Z+2 R0 F MAX
24 CYCL CALL M3
25 CALL LBL 10

26 STOP M6
27 TOOL CALL 3 Z S 2500
28 CYCL DEF 16.0 CONTOUR MILLING ..... Finish mill
29 CYCL DEF 16.1 SET UP +2 DEPTH –10
30 CYCL DEF 16.2 PECKG +5 F100 DR– F500
31 L Z+2 R0 F MAX
32 CYCL CALL M3
33 CALL LBL 10
34 L Z+20 R0 FMAX M2 ..... Retract and return

35 LBL 10
36 TOOL CALL 0 Z ..... Tool change
37 L Z+100 R0 F MAX
38 L X–20 Y–20 R0 F MAX
39 LBL 0

Block 40 onwards: add the subprograms listed on pages 8-27 and 8-28

63 END PGM OVERL4 MM
```



Downloaded from www.Manualslib.com manuals search engine

## 8.4 SL Cycles (Group II)

The SL cycles included in group II allow **contour-oriented** machining of complex contours to achieve a particularly high degree of surface finish.

These cycles differ from those featured in group I in that:

- Before the cycle starts, the TNC automatically positions the tool to the setup clearance.
- Each level of infeed depth is milled without interruptions since the cutter traverses around islands instead of over them.
- The radius of "inside corners" can be programmed - the tool keeps moving to prevent surface blemishes at inside corners (this applies for the outermost pass during roughing and side finishing).
- The contour is approached in a tangential arc for side finishing.
- For floor finishing, the tool again approaches the workpiece in a tangential arc (for tool axis Z, for example, the arc may be in the Z/X plane).
- The contour is machined throughout in either climb or up-cut milling.
- MP 7420 is replaced by DIRECTION OF ROTATION Q9.

The machining data, such as milling depth, finishing allowance and setup clearance, are entered as CONTOUR DATA in cycle 20.

There are four cycles for contour-oriented machining:

- PILOT DRILLING (cycle 21)
- ROUGH-OUT (cycle 22)
- FLOOR FINISHING (cycle 23)
- SIDE FINISHING (cycle 24)



Downloaded from www.Manualslib.com manuals search engine

## CONTOUR DATA (Cycle 20)

### Application

Machining data for the subprograms describing the subcontours are entered in cycle 20. They are valid for the cycles 21 to 24.

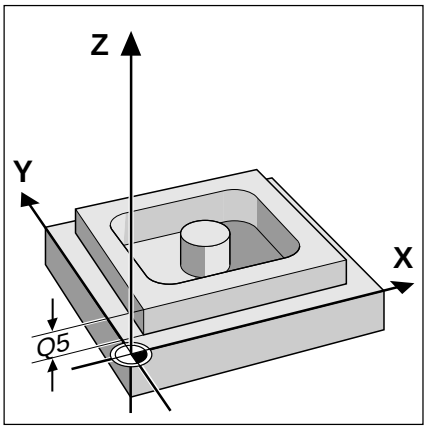

Fig. 8.36: Workpiece surface coordinates Q5

### Input data

- MILLING DEPTH Q1:
  Distance between workpiece surface and pocket floor.
- PATH OVERLAP FACTOR Q2:
  Q2 * tool radius = stepover factor k.
- ALLOWANCE FOR SIDE Q3:
  Finishing allowance in the working plane.
- ALLOWANCE FOR FLOOR Q4:
  Finishing allowance in the tool axis.
- WORKPIECE SURFACE COORDINATES Q5:
  Absolute coordinates of the workpiece surface referenced to the workpiece datum.
- SETUP CLEARANCE Q6:
  Distance between the tool tip and the workpiece surface.
- CLEARANCE HEIGHT Q7:
  Absolute height at which the tool cannot collide with the workpiece (for intermediate positioning and retraction at the end of the cycle).
- ROUNDING RADIUS Q8:
  Inside "corner" rounding radius.
- DIRECTION OF ROTATION Q9:
  Direction of rotation for pockets
  clockwise (Q9 = –1 up-cut milling for pocket and island)
  counterclockwise (Q9 = +1 climb milling for pocket and island).

The sign for milling depth Q1 determines the working direction (negative sign means negative working direction).

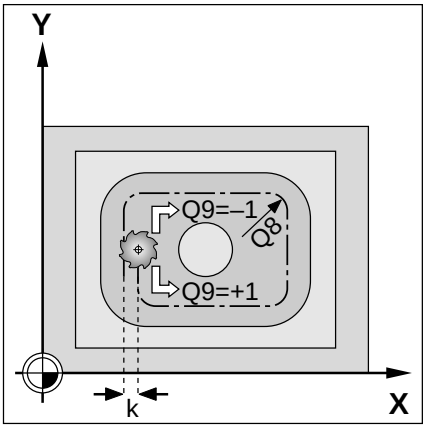

Fig. 8.37: Direction of rotation Q9 and stepover factor k

### Activation

Cycle 20 is immediately effective upon definition.

The machining parameters can be checked during a program interruption and can be overwritten, if required.

If the SL cycles are used in Q parameter programs, the cycle parameters Q1 to Q14 must not be used as program parameters.

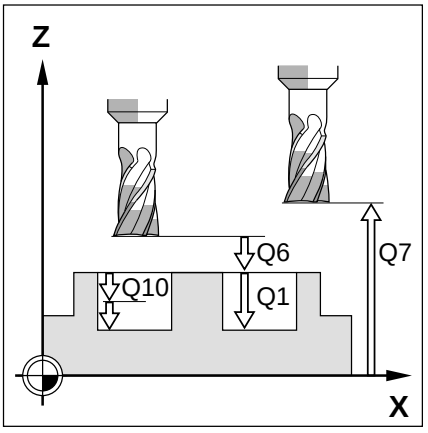

Fig. 8.38: Distance and infeed parameters



Downloaded from www.Manualslib.com manuals search engine

## PILOT DRILLING (Cycle 21)

### Process

Similar to cycle 1 PECKING

### Application

Cycle 21 is for PILOT DRILLING of the cutter infeed points. It accounts for the ALLOWANCE FOR SIDE and the ALLOWANCE FOR FLOOR as well as the radius of the rough-out tool. The cutter infeed points serve also as starting points for roughing.

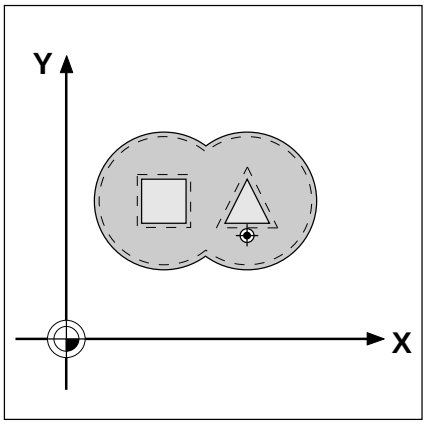

Fig. 8.39: Possible infeed point for PILOT DRILLING

### Input data

- PECKING DEPTH Q10:
  Dimension by which the tool drills in each infeed (negative sign for negative working direction)
- FEED RATE FOR PECKING Q11:
  Traversing speed of the tool in mm/min during drilling
- ROUGH MILL Q13:
  Tool number of the rough mill



Downloaded from www.Manualslib.com manuals search engine

## ROUGH-OUT (Cycle 22)

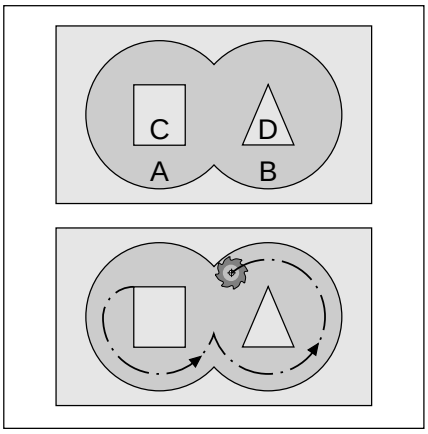


Fig. 8.40: Cutter path for ROUGH-OUT: A, B = pockets; C, D = islands

### Process

- The control positions the tool over the cutter infeed point
- The ALLOWANCE FOR SIDE is taken into account.
- After reaching the first pecking depth, the tool mills the contour in an outward direction at the programmed feed rate Q12.
- First the island contours (C/D in Fig. 8.39) are rough-milled until the pocket contour (A/B) is approached.
- Then the pocket contour is rough-milled and the tool is retracted to the CLEARANCE HEIGHT.

### Input data

- PECKING DEPTH Q10:
  Dimension by which the tool is plunged in each infeed (negative sign for negative working direction)
- FEED RATE FOR PECKING Q11:
  Traversing speed of the tool in mm/min during penetration
- FEED RATE FOR MILLING Q12:
  Traversing speed of the tool in mm/min while milling

### Required tool

The cycle requires a center-cut end mill (ISO 1641).

## FLOOR FINISHING (Cycle 23)

### Process

The function of cycle 23 FLOOR FINISHING is similar to cycle 22 ROUGH-OUT. The tool approaches the machining plane in a vertically tangential arc.

### Input data

- FEED RATE FOR PECKING Q11:
  Traversing speed of the tool during penetration
- FEED RATE FOR MILLING Q12:
  Traversing speed in the machining plane



Downloaded from www.Manualslib.com manuals search engine

## SIDE FINISHING (Cycle 24)

### Process

The subcontours are approached and departed on a tangential arc. Each subcontour is finish-milled separately.

### Input data

- DIRECTION OF ROTATION Q9:
  direction of the cutter path;
  +1: clockwise
  –1: counterclockwise
- PECKING DEPTH Q10:
  Dimension by which the tool plunges in each infeed.
- FEED RATE FOR PECKING Q11:
  Traversing speed during penetration
- FEED RATE FOR MILLING Q12:
  Traversing speed for milling
- ALLOWANCE FOR SIDE Q14:
  Enter the allowed material for several finish-milling operations.
  If Q14 = 0 is entered, the remaining finishing allowance will be cleared.

### Prerequisites

- The ALLOWANCE FOR SIDE (Q14) and the radius of the finish mill together must be smaller than the ALLOWANCE FOR SIDE (Q3, cycle 20) and the radius of the rough mill. The above mentioned calculation also applies if you run cycle 24 without previously running cycle 22 ROUGH-OUT; in this case, enter 0 for the radius of the clearing tool.

### Example: Rectangular pocket with round island

The input parameters are labeled by plain language comments.

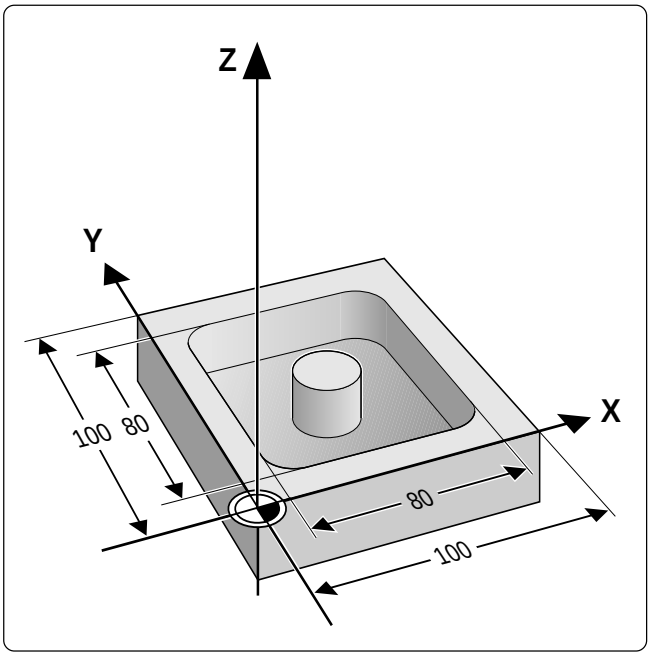


Continued...



Downloaded from www.Manualslib.com manuals search engine

```
0  BEGIN PGM SLTWO MM
1  BLK FORM 0.1 Z X+0 Y+0 Z–20
2  BLK FORM 0.2 X+100 Y+100 Z+0
3  TOOL DEF 1 L+0 R+3
4  TOOL DEF 2 L+0 R+2.5
5  TOOL DEF 3 L+0 R+2.5
6  CYCL DEF 14.0 CONTOUR GEOM.                 } Definition of contour subprogram numbers
7  CYCL DEF 14.1 CONTOUR LABEL 1/2             }
8  CYCL DEF 20.0 CONTOUR-DATA                  } Definition of parameters valid for cycles 21 to 24
     Q1  = –15    ; MILLING DEPTH               }
     Q2  =   1    ; TOOL PATH OVERLAP           }
     Q3  =  +1    ; ALLOWANCE FOR SIDE          }
     Q4  =  +1    ; ALLOWANCE FOR FLOOR         }
     Q5  =   0    ; WORKPIECE COORD             }
     Q6  =  +2    ; SETUP CLEARANCE             }
     Q7  = +50    ; CLEARANCE HEIGHT            }
     Q8  = +0.1   ; ROUNDING RADIUS             }
     Q9  =  +1    ; DIRECTION OF ROTATION       }
9  CALL LBL 10 ..... Tool change
10 TOOL CALL 1 Z S1000
11 CYCL DEF 21.0 PILOT DRILL                   } Cycle definition: PILOT DRILLING
     Q10 = +10    ; PECKING DEPTH               }
     Q11 = 100    ; FEED RATE FOR PECKING       }
     Q13 =   2    ; ROUGH-OUT TOOL              }
12 CYCL CALL M3 ..... Cycle call PILOT DRILLING
13 CALL LBL 10 ..... Tool change
14 TOOL CALL 2 Z S1000
15 CYCL DEF 22.0 ROUGH-OUT                     } Cycle definition: CONTOUR PAR. ROUGH-OUT
     Q10 = +10    ; PECKING DEPTH               }
     Q11 = 100    ; FEED RATE FOR PECKING       }
     Q12 = 500    ; FEED RATE FOR MILLING       }
16 CYCL CALL M3 ..... Cycle call: CONTOUR PAR. ROUGH-OUT
17 CALL LBL 10 ..... Tool change
18 TOOL CALL 3 Z S2000
19 CYCL DEF 23.0 FLOOR FINISHING               } Cycle definition: FLOOR FINISHING
     Q11 =  80    ; FEED RATE PECKING           }
     Q12 = 250    ; FEED RATE FOR MILLING       }
20 CYCL CALL M3 ..... Cycle call: FLOOR FINISHING
21 CYCL DEF 24.0 SIDE FINISHING                } Cycle definition: SIDE FINISHING
     Q9  =  +1    ; ROTATING DIRECTION          }
     Q10 =  +5    ; PECKING DEPTH               }
     Q11 = 100    ; FEED RATE PECKING           }
     Q12 = 240    ; FEED RATE FOR MILLING       }
     Q14 =   0    ; ALLOWANCE FOR SIDE          }
22 CYCL CALL M3 ..... Cycle call: SIDE FINISHING
23 L Z+100 R0 FMAX M2
24 LBL 10 ..... Subprogram for tool change
25 TOOL CALL 0 Z
26 L Z+100 R0 FMAX
27 L X–20 Y–20 FMAX M6
28 LBL 0
29 LBL 1                                       } Contour subprogram “Rectangular pocket”
30 L X+10 Y+50 RR                              }
31 L Y+90                                      }
32 L X+90                                      }
33 L Y+10                                      }
34 L X+10                                      }
35 L Y+50                                      }
36 LBL 0                                       }
37 LBL 2                                       } Contour subprogram “Round island”
38 CC X+50 Y+50                                }
39 L X+35 Y+50 RL                              }
40 C X+35 Y+50 DR–                             }
41 LBL 0                                       }
42 END PGM SLTWO MM
```



Downloaded from www.Manualslib.com manuals search engine

## CONTOUR TRAIN (Cycle 25)

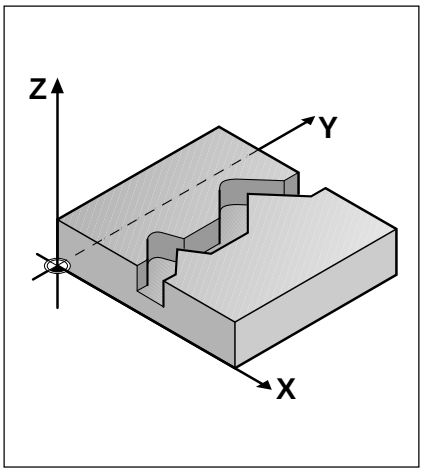

Fig. 8.41: Example of an "open contour"

### Process

This cycle – in combination with cycle 14 CONTOUR GEOM. – facilitates the machining of "open" contours, where the contour does not end at its starting point.

Cycle 25 CONTOUR TRAIN offers considerable advantages over machining an open contour using positioning blocks:

- The control monitors the operation to prevent undercuts or surface blemishes. Please be sure run a graphic simulation of the contour before execution!
- If the radius of the selected tool is too large, the corners of the contour may have to be reworked.
- The contour can be machined throughout by up-cut or by climb cutting. The type of milling even remains effective when the contours are mirrored.
- The tool can be traversed back and forth for milling in several infeeds: this results in faster machining.
- Allowance values can be entered in order to perform repeated rough-milling and finish milling operations.

Cycle 25 CONTOUR TRAIN should not be used for closed contours. With closed contours, the starting point and the end point of the contour must not be located in a contour corner.

### Input data

- MILLING DEPTH Q1:
  Distance between workpiece surface and contour floor. The algebraic sign determines the working direction (a negative value means negative working direction).
- ALLOWANCE FOR SIDE Q3:
  Finishing allowance in the machining plane
- WORKPIECE SURFACE COORDINATES Q5:
  Absolute coordinates of the workpiece surface referenced to the workpiece datum
- CLEARANCE HEIGHT Q7:
  Absolute height at which the tool cannot collide with the workpiece – Position for tool retraction at the end of the cycle
- PECKING DEPTH Q10:
  Dimension by which the tool is plunged in each infeed
- FEED RATE FOR PECKING Q11:
  Traversing speed of the tool in the tool axis
- FEED RATE FOR MILLING Q12:
  Traversing speed of the tool in the machining plane
- CLIMB OR UP-CUT Q15:
  Climb milling: Input value = +1
  Conventional up-cut milling: Input value = – 1
  To enable up-cut milling and climb milling alternately in several infeeds: Input value = 0

- If you are using cycle 25 CONTOUR TRAIN, only the first label of cycle 14 CONTOUR GEOM. will be executed.
- Positions that are programmed in incremental dimensions immediately after cycle 25 are referenced to the position of the tool at the end of the cycle.
- The subprograms can contain up to 128 contour elements each.
- Cycle 20 CONTOUR DATA is not required.



Downloaded from www.Manualslib.com manuals search engine

**Example:**

Climb milling. The input parameters are labeled in the program by plain language comments.

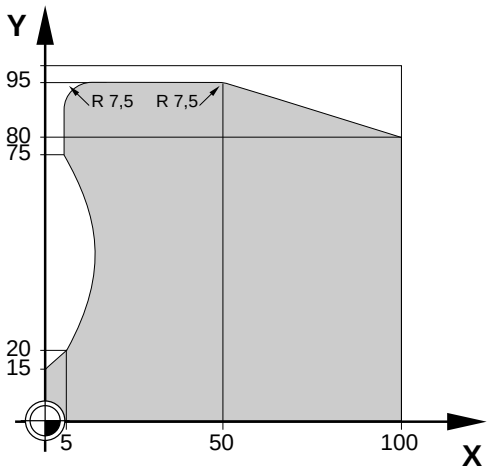


**Cycle in a part program**

```
0   BEGIN PGM CONTRN MM
1   BLK FORM 0.1 Z X+0 Y+0 Z–20
2   BLK FORM 0.2 X+100 Y+100 Z+0 ..... Define blank form
3   TOOL DEF 1 L+0 R+10 ..... Define the tool
4   TOOL CALL 1 Z S1750 ..... Call the tool

5   CYCL DEF 14.0 CONTOUR GEOM.
6   CYCL DEF 14.1 CONTOUR LABEL 1 ..... Define the contour subprogram

7   CYCL DEF 25.0 CONTOUR TRAIN
    Q1=–12          ;MILLING DEPTH
    Q3=+0           ;ALLOWANCE FOR SIDE
    Q5=+0           ;WORKPIECE SURFACE COORD
    Q7=+20          ;CLEARANCE HEIGHT
    Q10=+2          ;PECKING DEPTH
    Q11=100         ;FEED RATE FOR PECKING
    Q12=200         ;FEED RATE FOR MILLING
    Q15=+1          ;CLIMB OR UP-CUT ..... Choose type of milling

8   L Z+100 R0 F MAX M3
9   CYCL CALL ..... Call cycle
10  L Z+100 R0 F MAX M2 ..... Retract tool, end of main program

11  LBL 1 ..... Begin the contour subprogram
12  L X+0 Y+15 RL
13  L X+5 Y+20
14  CT X+5 Y+75 ..... Describe the contour to be machined
15  L Y+95
16  RND R7.5
17  L X+50
18  RND R7.5
19  L X+100 Y+80
20  LBL 0 ..... End of subprogram
21  END PGM CONTRN MM
```



Downloaded from www.Manualslib.com manuals search engine

## CYLINDER SURFACE (Cycle 27)

The machine tool and the TNC must be prepared by the machine tool manufacturer for the use of cycle 27

**Process**

This cycle enables you to program a contour in two dimensions and then machine it on a cylindrical surface.

The contour is described in a subprogram identified in cycle 14 (CONTOUR GEOM.).

The subprogram contains coordinates in a rotary axis and in its parallel axis. The rotary axis C, for example, has Z as its parallel axis. The path functions L, CHF, CR, RND are available for programming.

The dimensions in the rotary axis can be entered as desired either in degrees or in mm (inch). You can select the desired dimension type in the cycle definition.

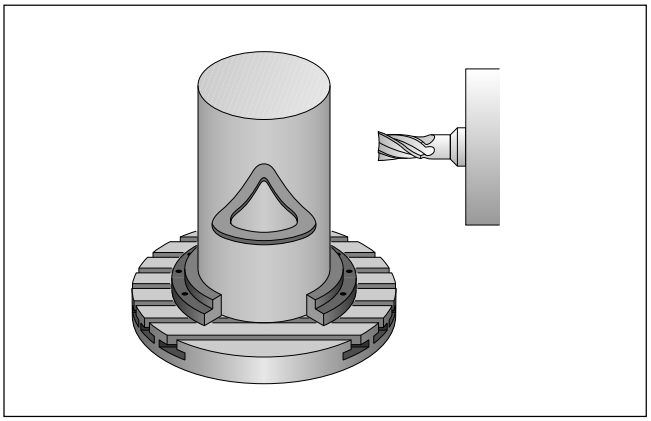

Fig. 8.42: Contour on a cylindrical surface

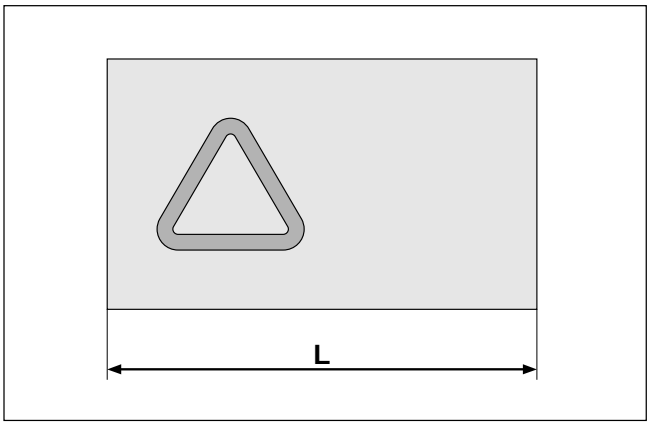


Fig. 8.43: The unrolled surface of the cylinder:
L = Diameter of cylinder * 3.14

Cycle 27 CYLINDER SURFACE should not be used for closed contours. The beginning and the end of a closed contour should not fall at the same corner point.



Downloaded from www.Manualslib.com manuals search engine

**Input data**

- MILLING DEPTH Q1:
  Distance between the cylindrical surface and the floor of the contour.
- ALLOWANCE FOR SIDE Q3:
  Finishing allowance in the plane of the unrolled cylindrical surface.
  This allowance is effective in the direction of the radius compensation.
- SETUP CLEARANCE Q6:
  Distance between the tool tip and the cylinder surface.
- PECKING DEPTH Q10:
  Dimension by which the tool advances in each infeed.
- FEED RATE FOR PECKING Q11:
  Feed rate for traversing in the tool axis.
- FEED RATE FOR MILLING Q12:
  Feed rate for traversing in the working plane.
- RADIUS Q16:
  Radius of the cylinder on which the contour is to be machined.
- DIMENSION TYPE (ANG/LIN) Q17:
  The dimensions for the rotary axis of the subprogram are given either in degrees (0) or in mm/inch (1).

**Prerequisites**

- The cycle requires a center-cut end mill (ISO 1641).
- The cylinder must be set up centered on the rotary table.
- The tool axis must be perpendicular to the rotary table axis. If this is not the case, an error message will result.



Downloaded from www.Manualslib.com manuals search engine

**Example:**

Rectangular channel on a cylindrical surface

| | |
|---|---|
| Channel width | 20 mm |
| Channel height | 60 mm |
| Depth | 7.5 mm |
| Cylinder diameter | 50 mm |

Length of programming plane =
Circumference of the cylinder:
3.14 x 50 mm = 157 mm

Dimensional data for the rotary axis in mm
(Q17 = 1).

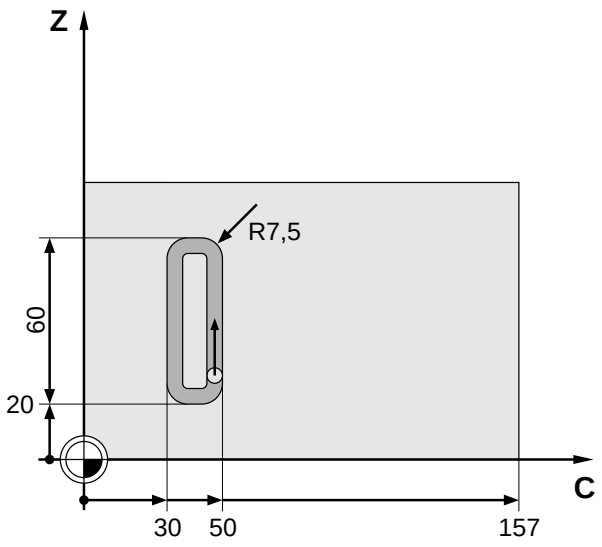


**Cycle in a part program**

```
0   BEGIN PGM CYLSURF MM
1   TOOL DEF 1 L+0 R+3.5
2   TOOL CALL 1 Y S2000 DL+0.5 ..... Call the tool, tool axis is Y
3   L Y+200 R0 F MAX
4   CYCL DEF 14.0 CONTOUR GEOM.
5   CYCL DEF 14.1 CONTOUR LABEL 1 ..... Define number of the subprogram for the plane
                                        contour
6   CYCL DEF 27.0 CYLINDER SURFACE ..... Define the cycle CYLINDER SURFACE
    Q1=-7.5         ;MILLING DEPTH
    Q3=+0           ;ALLOWANCE FOR SIDE
    Q6=+2           ;SETUP CLEARANCE
    Q10=+4          ;PECKING DEPTH
    Q11=100         ;FEED RATE FOR PECKING
    Q12=250         ;FEED RATE FOR MILLING
    Q16=+25         ;RADIUS
    Q17=1           ;DIMENSION TYPE (ANG/LIN)
7   L C+0 R0 F MAX M3 ..... Pre-position the rotary axis
8   CYCL CALL ..... Call the cycle
9   L Y+200 R0 F MAX M2 ..... Retract, end of main program

10  LBL 1
11  L C+40 Z+20 RL ..... Starting position C 40 mm
12  L C+50 Z+20
13  RND R7.5
14  L IZ+60
15  RND R7.5
16  L IC–20
17  RND R7.5
18  L Z+20
19  RND R7.5
20  L C+40
21  LBL 0 ..... End of subprogram
22  END PGM CYLSURF MM
```



Downloaded from www.Manualslib.com manuals search engine

## 8.5 Cycles for Coordinate Transformations

Once a contour has been programmed, it can be positioned on the workpiece at various locations and in different sizes through coordinate transformations. The following cycles can be used:

- DATUM SHIFT (cycle 7)
- MIRROR IMAGE (cycle 8)
- ROTATION (cycle 10)
- SCALING (cycle 11)

The original contour must be marked in the part program as a subprogram or a program section.

**Activation of coordinate transformations**

A coordinate transformation becomes effective as soon as it is defined. It remains active until changed or cancelled.

**To cancel a coordinate transformation**

- Define cycles for basic behavior with a new value, such as scaling factor 1
- Execute a miscellaneous function M02, M30, or with the block END PGM (depending on machine parameters)
- Select a new program

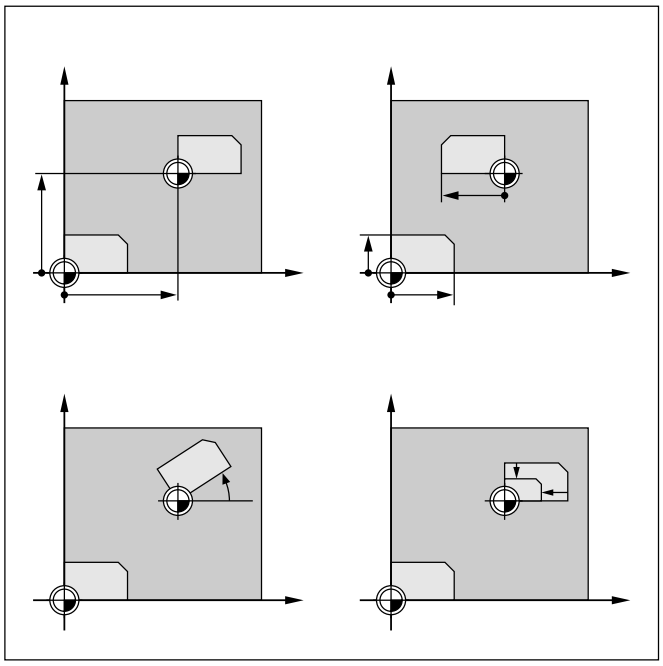

Fig. 8.44: Examples of coordinate transformations



Downloaded from www.Manualslib.com manuals search engine

## DATUM SHIFT (Cycle 7)

### Application

With the aid of the datum shift, machining operations can be repeated at various locations on the workpiece.

### Activation

After cycle definition of the DATUM SHIFT, all coordinate data are based on the new datum. The datum shift is displayed in the additional status area.

### Input data

For a datum shift, you need only enter the coordinates of the new datum (zero point). Absolute values are referenced to the manually set workpiece datum. Incremental values are referenced to the datum which was last valid; this can be a datum which has already been shifted.

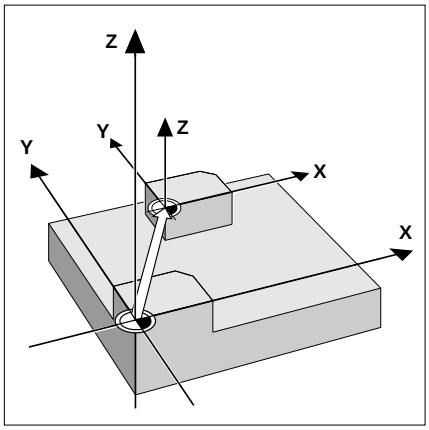

Fig. 8.45: Activation of datum shift

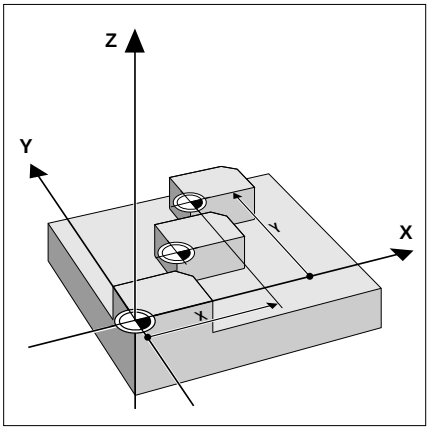

Fig. 8.46: Datum shift, absolute

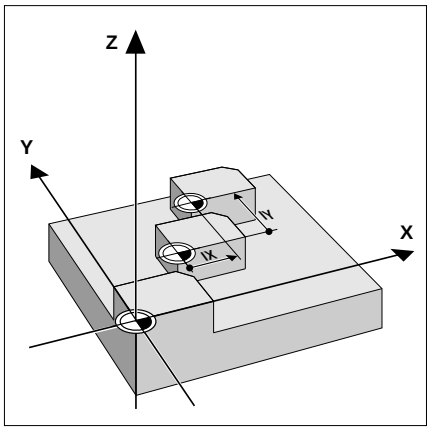

Fig. 8.47: Datum shift, incremental

### Cancellation

A datum shift is cancelled by entry of the datum shift coordinates X=0, Y=0 and Z=0.

When combining transformations, the datum shift must be programmed before the other transformations.

### Graphics

If you program a new BLK FORM after a datum shift, MP 7310 (see page 12-10) determines whether the BLK FORM is referenced to the current datum or the original datum. Referencing a new BLK FORM to the current datum enables you to display each part in a program in which several parts are machined.



Downloaded from www.Manualslib.com manuals search engine

**Example: Datum shift**

A machining sequence in the form of a sub-program is to be executed twice:

a) once, referenced to the specified datum ① X+0/Y+0 and
b) a second time, referenced to the shifted datum ② X+40/Y+60.

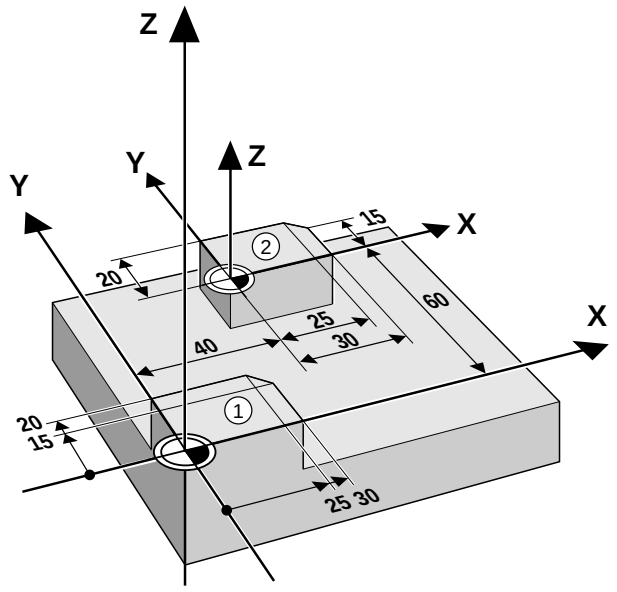


**Cycle in a part program**

```
0   BEGIN PGM DATUM MM
1   BLK FORM 0.1 Z X+0 Y+0 Z–20
2   BLK FORM 0.2 X+100 Y+100 Z+0
3   TOOL DEF 1 L+0 R+4
4   TOOL CALL 1 Z S1000
5   L Z+100 R0 F MAX
6   CALL LBL 1 ..... Without datum shift
7   CYCL DEF 7.0 DATUM SHIFT
8   CYCL DEF 7.1 X+40
9   CYCL DEF 7.2 Y+60
10  CALL LBL 1 ..... With datum shift
11  CYCL DEF 7.0 DATUM SHIFT ..... Cancellation of datum shift
12  CYCL DEF 7.1 X+0
13  CYCL DEF 7.2 Y+0
14  L Z+100 R0 F MAX M2
15  LBL 1
      .
      .
      .
    LBL 0
    END PGM DATUM MM
```



Downloaded from www.Manualslib.com manuals search engine

**Subprogram:**

```
LBL 1
APPR LT X+0 Y+0 Z–5 LEN10 RL F100 M3
L Y+20
L X+25
L X+30 Y+15
L Y+0
L X+0
DEP LT LEN 20
L Z+2 F MAX
LBL 0
```

Depending on the transformations, the subprogram is added in the program at the following positions (NC blocks):

| | LBL 1 | LBL 0 |
|---|---|---|
| Datum shift | block 15 | block 27 |
| Mirror image, rotation, scaling | block 19 | block 31 |

## DATUM SHIFT: Datum points from datum tables (Cycle 7)

### Application

Datum tables are applied for

- frequently recurring machining sequences at various locations on the workpiece
- frequent use of the same datum shift

The datum points from datum tables are only effective with absolute coordinate values.

Within a program, datum points can either be programmed directly in cycle definition or called from a datum table.

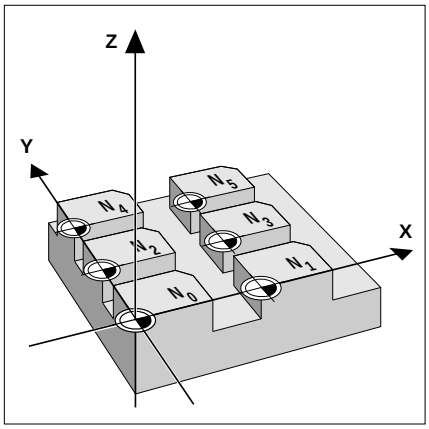

Fig. 8.48: Examples of similar datum shifts

### Input

Enter the number of the datum from the datum table or a Q parameter number. If you enter a Q parameter number, the TNC activates the datum number found in the Q parameter.

### Cancellation

- A datum shift to the coordinates X=0; Y=0 etc. is called from a datum table.
- The datum shift is executed directly via cycle definition (see page 8-45).

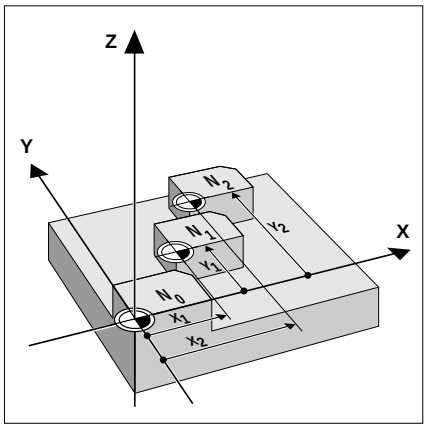

Fig. 8.49: Only absolute datum shifts are possible from a datum table



Downloaded from www.Manualslib.com manuals search engine

### Editing a datum table

Datum tables are edited in the PROGRAMMING AND EDITING mode of operation:

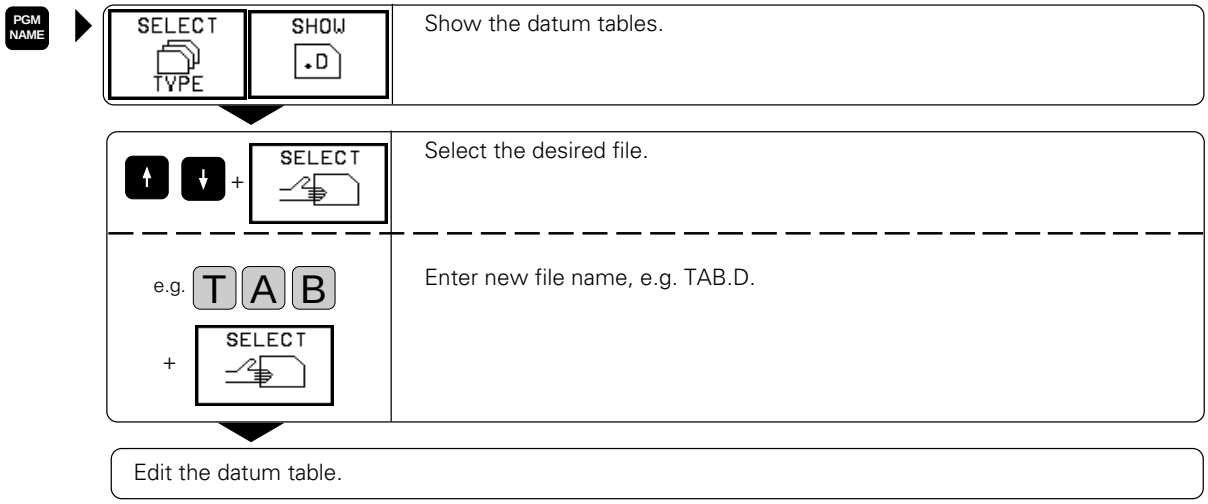


The soft-key row comprises the following functions for editing:

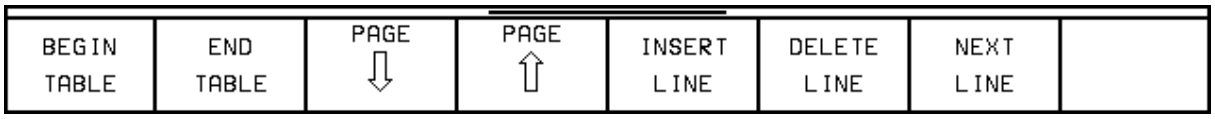


| Function | Soft key |
|---|---|
| • Jump to beginning of the datum table | BEGIN TABLE |
| • Jump to end of the datum table | END TABLE |
| • Page up/down | PAGE / PAGE |
| • Insert line | INSERT LINE |
| • Delete line | DELETE LINE |
| • Enter line, jump to beginning of next line | NEXT LINE |

- Lines can only be inserted at the end of the file.
- When opening a new datum table, be sure to select the correct dimensions (mm/inch).
- Datums from a datum table can be referenced either to the current datum or to the machine datum. The desired setting is made in MP 7475 (see page 12-12).



Downloaded from www.Manualslib.com manuals search engine

**To leave the datum table:**

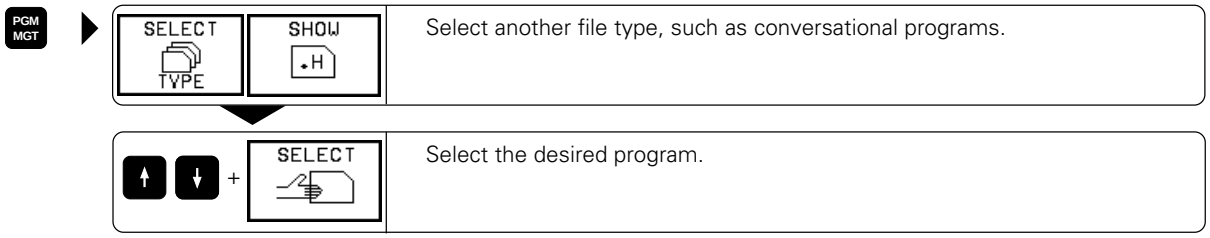




Downloaded from www.Manualslib.com manuals search engine

## MIRROR IMAGE (Cycle 8)

### Application

This cycle makes it possible to machine the mirror image of a contour in the machining plane.

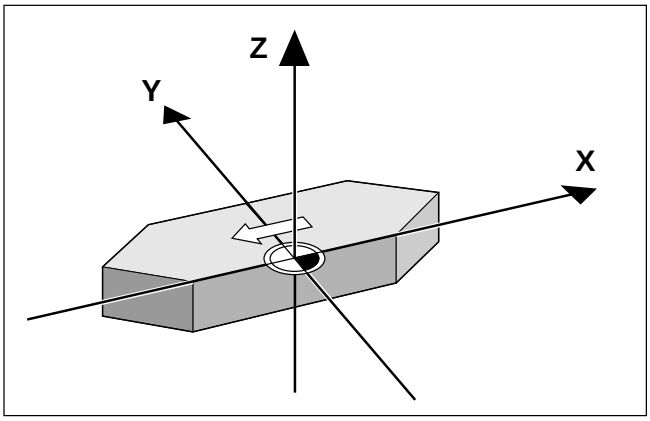


Fig. 8.50: MIRRORING a contour

### Activation

The mirror image cycle is active immediately upon definition. The mirrored axis is indicated in the additional status display.

- If one axis is mirrored, the machining direction of the tool is reversed (except in fixed cycles).
- If two axes are mirrored, the machining direction remains the same.

The mirror image depends on the location of the datum:

- The datum is located on the contour to be mirrored: the part simply "flips over."
- The datum is located outside the contour to be mirrored: the part also "jumps" to another location.

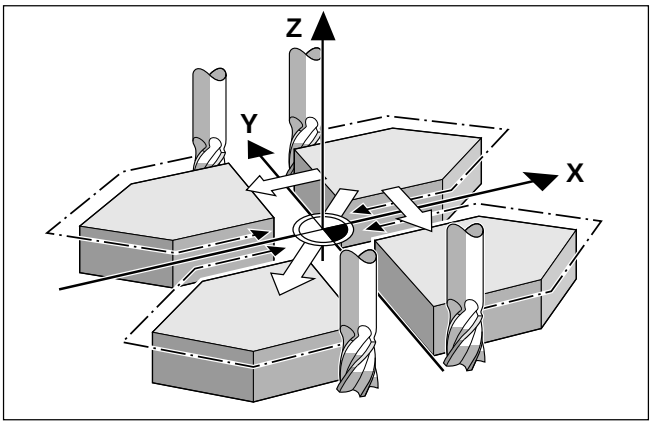


Fig. 8.51: Repeated mirroring, machining direction

### Input data

You enter the axes that you wish to mirror. The tool axis cannot be mirrored.

### Cancellation

The MIRROR IMAGE cycle is cancelled by answering the dialog query with NO ENT.

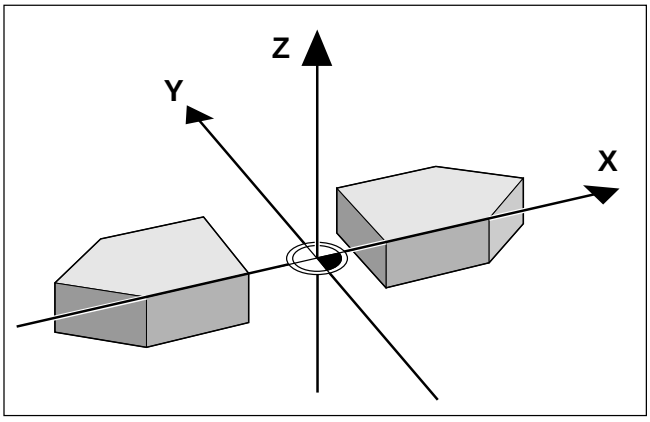


Fig. 8.52: Datum is located outside the contour to be mirrored



Downloaded from www.Manualslib.com manuals search engine

**Example: Mirror image**

A program section (subprogram 1) is to be executed once – as originally programmed – at position X+0/Y+0 ①, and then mirrored once in X ③ at position X+70/Y+60 ②.

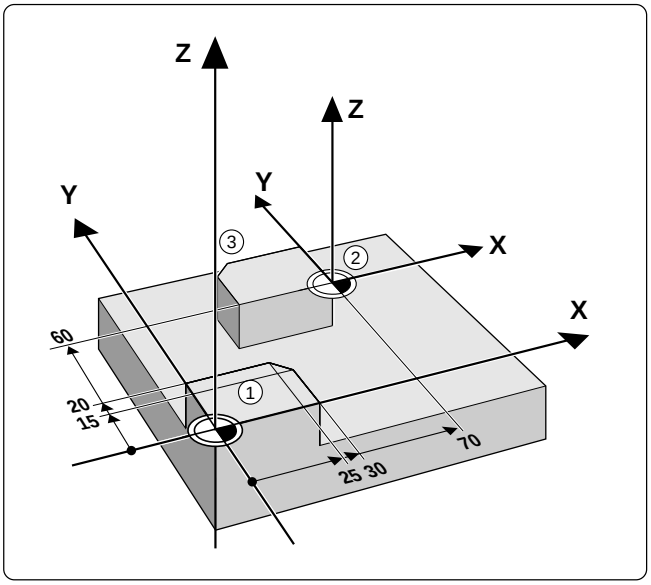


**Cycle MIRROR IMAGE in a part program**

```
0   BEGIN PGM MIRROR MM
1   BLK FORM 0.1 Z X+0 Y+0 Z–20
2   BLK FORM 0.2 X+100 Y+100 Z+0
3   TOOL DEF 1 L+0 R+4
4   TOOL CALL 1 Z S1000
5   L Z+100 R0 F MAX
6   CALL LBL 1 ..... Not mirrored ①; mirrored execution: sequence
7   CYCL DEF 7.0 DATUM SHIFT ..... 1. Datum shift ②
8   CYCL DEF 7.1 X+70
9   CYCL DEF 7.2 Y+60
10  CYCL DEF 8.0 MIRROR IMAGE ..... 2. Mirror image ③
11  CYCL DEF 8.1 X
12  CALL LBL 1 ..... 3. Subprogram call
13  CYCL DEF 8.0 MIRROR IMAGE ..... Cancel mirror image
14  CYCL DEF 8.1
15  CYCL DEF 7.0 DATUM SHIFT ..... Cancel datum shift
16  CYCL DEF 7.1 X+0
17  CYCL DEF 7.2 Y+0
18  L Z+100 R0 F MAX M2
19  LBL 1                          } The subprogram is identical with the
      .                            } subprogram on page 8-47
      .                            }
      .                            }
    LBL 0
    END PGM MIRROR MM
```



Downloaded from www.Manualslib.com manuals search engine

## ROTATION (Cycle 10)

### Application

The coordinate system can be rotated about the active datum in the machining plane within a program.

### Activation

Rotation becomes active as soon as it is defined. You must move all axes in the working plane so that the compensation is applied to all axes. This cycle is also effective in the operating mode POSITIONING WITH MANUAL DATA INPUT. An active radius compensation is cancelled by the ROTATION cycle and thus must be reprogrammed.

Reference axis for the rotation angle:

- X/Y plane X axis
- Y/Z plane Y axis
- Z/X plane Z axis

The active rotation angle is displayed in the additional status display.

### Input data

The rotation angle is entered in degrees (°).
Input range: –360° to +360° (absolute or incremental)

### Cancellation

Rotation is cancelled by entering a rotation angle of 0°.

### Example: Rotation

A contour (subprogram 1) is to be executed once – as originally programmed – referenced to the datum X+0/Y+0, and then rotated by 35° and referenced to position X+70 Y+60.

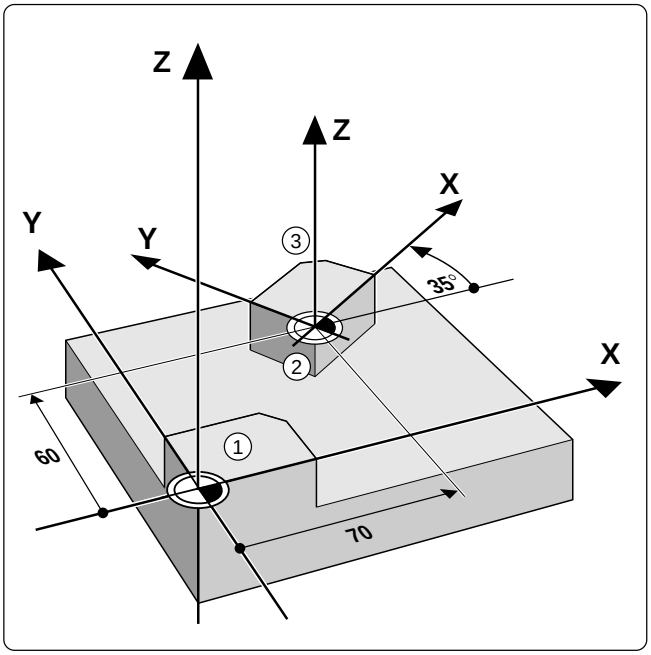


Continued...



Downloaded from www.Manualslib.com manuals search engine

**Cycle in a part program**

```
0   BEGIN PGM ROTATE MM
1   BLK FORM 0.1 Z X+0 Y+0 Z–20
2   BLK FORM 0.2 X+100 Y+100 Z+0
3   TOOL DEF 1 L+0 R+5
4   TOOL CALL 1 Z S1000
5   L Z+100 R0 F MAX
6   CALL LBL 1 ..... Not-rotated execution ①
7   CYCL DEF 7.0 DATUM SHIFT ..... Rotated execution. Sequence:
8   CYCL DEF 7.1 X+70
9   CYCL DEF 7.2 Y+60 ..... 1. Datum shift ②
10  CYCL DEF 10.0 ROTATION ..... 2. Rotation ③
11  CYCL DEF 10.1 ROT +35
12  CALL LBL 1 ..... 3. Subprogram call
13  CYCL DEF 10.0 ROTATION ..... Cancel rotation
14  CYCL DEF 10.1 ROT 0
15  CYCL DEF 7.0 DATUM SHIFT ..... Cancel datum shift
16  CYCL DEF 7.1 X+0
17  CYCL DEF 7.2 Y+0
18  L Z+100 R0 F MAX M2
19  LBL 1
      .
      .
      .
    LBL 0
    END PGM ROTATE MM
```

The corresponding subprogram (see page 8-47) is programmed after M2.

## SCALING FACTOR (Cycle 11)

### Application

Contours can be enlarged or reduced in size within a program, allowing you to program shrinkage and oversize allowances.

### Activation

The scaling factor is effective immediately upon cycle definition.
The scaling factor can be applied

- in the machining plane, or on all three main axes at the same time (depending on MP7410)
- to the dimensions in cycles
- to parallel axes U, V, W

### Input data

The cycle is defined by entering the scaling factor SCL. The control multiplies the coordinates and radii by the SCL factor (as described under "Activation" above).
Enlargement: SCL factor greater than 1 (maximum: 99.999999)
Reduction: SCL factor less than 1 (minimum: 0.000001)

### Cancellation

To cancel a scaling factor, enter a factor of 1 in the SCALING FACTOR cycle.

### Prerequisite

It is advisable to set the datum to an edge or a corner of the contour before enlarging or reducing the contour.

Scaling factors can also be entered for axis-specific scaling (see cycle 26).



Downloaded from www.Manualslib.com manuals search engine

**Example: Scaling factor**

A contour (subprogram 1) is to be executed – as originally programmed– at the manually set datum X+0/Y+0, and then referenced to position X+60/Y+70 and executed with the scaling factor 0.8.

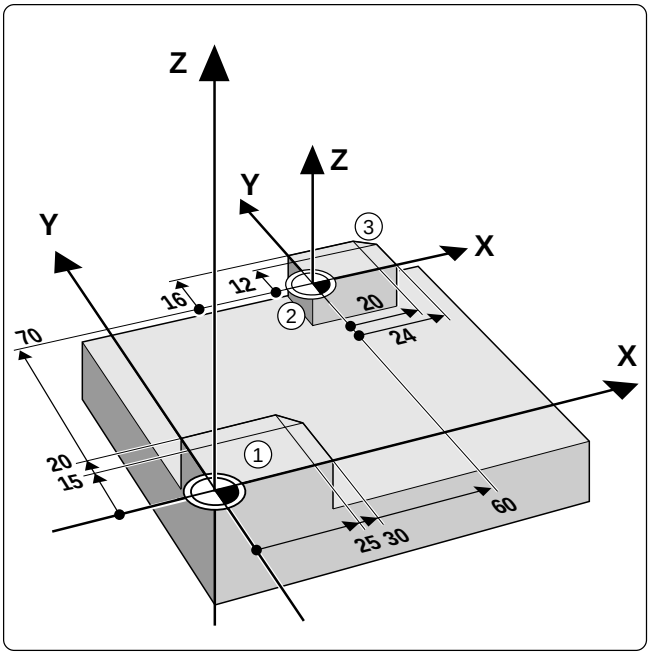


**SCALING cycle in a part program**

```
0   BEGIN PGM DIMENS MM
1   BLK FORM 0.1 Z X+0 Y+0 Z–20
2   BLK FORM 0.2 X+100 Y+100 Z+0
3   TOOL DEF 1 L+0 R+5
4   TOOL CALL 1 Z S1000
5   L Z+100 R0 F MAX
6   CALL LBL 1 ..... Execution with original size ①
7   CYCL DEF 7.0 DATUM SHIFT ..... Execution with scaling factor. Sequence:
8   CYCL DEF 7.1 X+60
9   CYCL DEF 7.2 Y+70 ..... 1. Datum shift ②
10  CYCL DEF 11.0 SCALING ..... 2. Define scaling factor ③
11  CYCL DEF 11.1 SCL 0.8
12  CALL LBL 1 ..... 3. Call subprogram (scaling factor active)
13  CYCL DEF 11.0 SCALING ..... Cancel transformations
14  CYCL DEF 11.1 SCL 1
15  CYCL DEF 7.0 DATUM SHIFT
16  CYCL DEF 7.1 X+0
17  CYCL DEF 7.2 Y+0
18  L Z+100 R0 F MAX M2
19  LBL 1
      .
      .
      .
    LBL 0
    END PGM DIMENS MM
```

The corresponding subprogram (see page 8-47) is programmed after M2.



Downloaded from www.Manualslib.com manuals search engine

## AXIS-SPECIFIC SCALING (Cycle 26)

### Application

Each coordinate axis can be programmed with its own axis-specific scaling factor. In addition, the coordinates of a center can be programmed for all scaling factors. The size of the contour is enlarged or reduced with reference to the center, and not necessarily – as in cycle 11 SCALING FACTOR – with reference to the active datum.

### Activation

The cycle becomes effective immediately upon definition in part programming.

### Input data

- AXIS AND SCALING FACTOR:
  Coordinate axis/axes as well as factor(s) involved in enlarging or reducing the size of a contour by axis-specific scaling. The factor is entered as a positive value of up to 99.999 999
- CENTER COORDINATES:
  Center of the axis-specific enlarging or reducing cycle

Coordinate axes are selected using the soft keys.

### Cancellation

The scaling factor is cancelled by entering factor 1 for the same axis.

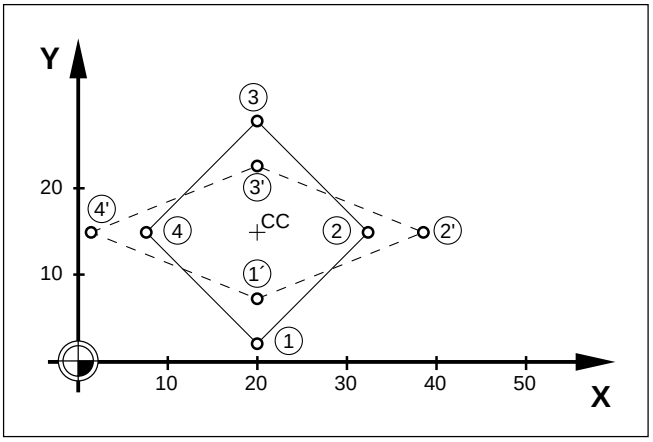


Fig. 8.53 Axis-specific scaling factor, center coordinates in the symmetry center of the contour

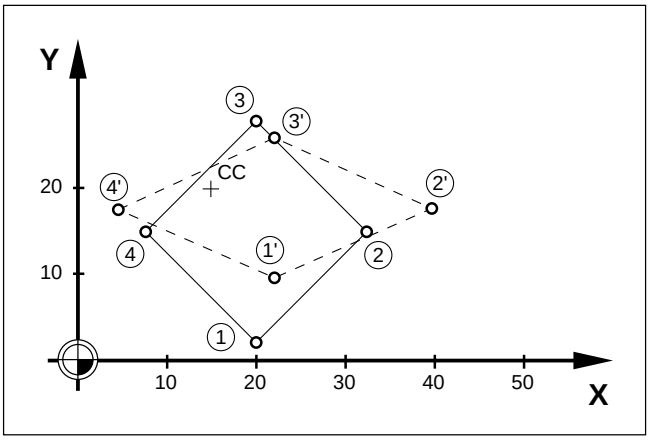


Fig. 8.54 Axis-specific scaling factor, center coordinates determined arbitrarily

Coordinate axes sharing coordinates for arcs must be enlarged or reduced by the same scaling factor.

### Example:

Axis-specific scaling factors in the machining plane

Preset: Quadrangle (see Fig. 8.53)

| | | |
|---|---|---|
| Corner 1: | X = 20 mm | Y = 2.5mm |
| Corner 2: | X = 32.5mm | Y = 15 mm |
| Corner 3: | X = 20 mm | Y = 27.5mm |
| Corner 4: | X = 7.5mm | Y = 15 mm |

- Enlarge X axis by factor 1.4
- Reduce Y axis by factor 0.6
- Center at CCX = 15 mm CCY = 20 mm

### NC blocks:

*CYCL DEF 26.0 AXIS-SPEC. SCALING*
*CYCL DEF 26.1 X1.4 Y0.6 CCX+15 CCY+20*



Downloaded from www.Manualslib.com manuals search engine

# 8.6 Other Cycles

## DWELL TIME (Cycle 9)

### Application

Within a running program, the execution of the next block is delayed by the programmed dwell time.

The dwell time can be used for chip breaking, for example.

### Activation

The cycle becomes effective immediately upon definition. Modal conditions such as spindle rotation are not affected.

### Input data

The dwell time is entered in seconds.
Input range: 0 to 30 000 seconds (approx. 8.3 hours) in increments of 0.001 second.

## PROGRAM CALL (Cycle 12)

### Application and activation

Routines that are programmed by the user, such as special drilling cycles, curve milling or geometrical modules, can be written as main programs and then called for use like fixed cycles.

### Input data

Enter the file name of the program to be called.

The program is called-up via

- CYCL CALL (separate block) or
- M99 (blockwise) or
- M89 (modally).

### Example: Program call

A callable program 50 is to be called into a program via cycle call.

**Part program**

```
:
:
:
CYCL DEF 12.0 PGM CALL ..... Definition:
CYCL DEF 12.1 PGM 50 ..... "Program 50 is a cycle"
L X+20 Y+50 FMAX M99 ..... Call-up of program 50
:
:
:
```



Downloaded from www.Manualslib.com manuals search engine

## ORIENTED SPINDLE STOP (Cycle 13)

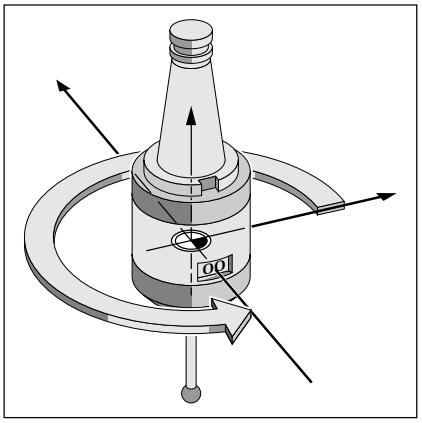

Fig. 8.55: Oriented spindle stop

### Application

The control can address the machine tool spindle as a 6th axis and turn it to a certain angular position. Oriented spindle stops are required for

- Tool changing systems with a defined tool change position
- Orientation of the transmitter/receiver window of the TS 511 3D touch probe system from HEIDENHAIN

### Activation

The angle of orientation defined in the cycle is positioned by entering M19. If M19 is executed without a cycle definition, the machine tool spindle will be oriented to an angle which has been set in the machine parameters.

Apart from cycle 13, oriented spindle stops can also be programmed in the machine parameters.

### Prerequisite

The machine must be set up for this cycle.

### Input data

Angle of orientation (according to the reference axis of the machining plane)

Input range: 0 to 360°.
Input resolution: 0.1°.



Downloaded from www.Manualslib.com manuals search engine

## WORKING PLANE (Cycle 19) (not for TNC 407)

The functions for tilting the working plane are adapted to the TNC and the machine by the machine manufacturer.

The TNC supports machine tools with swivel heads (the tool is tilted) and/or tilting tables (the workpiece is tilted).

The program is written as usual in a main plane, such as the X/Y plane, but is executed in a plane that is tilted relative to the main plane.

Typical applications:

- Oblique holes
- Contours in an oblique plane

There are two ways to tilt the working plane:

- 3D ROT soft key in the MANUAL OPERATION and ELECTRONIC HANDWHEEL operation modes (see page 2-9)
- Cycle 19 WORKING PLANE in the part program

The TNC functions for tilting the working plane are coordinate transformations. The transformed tool axis (i.e., as calculated by the TNC) always remains parallel to the actual tool axis (the axis being positioned). The working plane is always perpendicular to the direction of the tool axis.

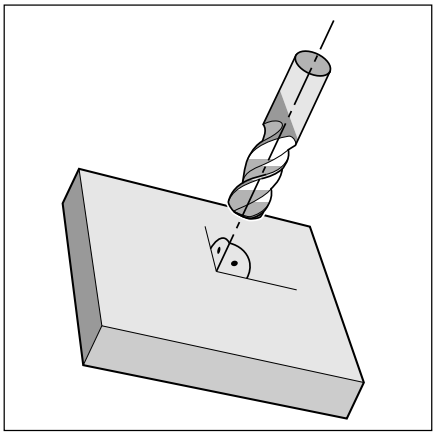

Fig. 8.56: Pre-positioning the tool perpendicular to tilted plane

When tilting the working plane, the TNC differentiates between two machine types:

- Machines with tilting tables
- Machines with swivel heads

**For machines with tilting tables:**

- You must bring the **workpiece** into the desired position for machining by positioning the tilting table, for example with an L block.
- The position of the transformed tool axis does **not** change in relation to the machine-based coordinate system. Thus for example if you rotate the swivel table – and therefore the workpiece – by 90°, **the coordinate system does not rotate**. If you press the Z+ axis direction button in the MANUAL OPERATION mode, the tool moves in Z+ direction.
- In calculating the transformed coordinate system the TNC considers only the mechanically influenced offsets of the particular tilting table (the so-called "translational" components).

**For machines with swivel heads:**

- You must bring the **tool** into the desired position for machining by positioning the swivel head, for example with an L block.
- The position of the transformed tool axis (like the position of the tool) **changes** in relation to the machine-based coordinate system. Thus for example if you rotate the swivel head – and therefore the tool – in the B axis by +90°, **the coordinate system rotates also**. If you press the Z+ axis direction button in the MANUAL OPERATION mode, the tool moves in X+ direction of the machine-based coordinate system.
- In calculating the transformed coordinate system the TNC considers both the mechanically influenced offsets of the particular swivel head (the so-called "translational" components) **and** the offsets caused by tilting of the tool (3D tool length compensation).



Downloaded from www.Manualslib.com manuals search engine

**Start of activation**

Cycle 19 becomes effective as soon as it is defined in the part program. If the function TILTING PROGRAM RUN is activated in MANUAL mode (see page 2-11), the angle value entered in this menu will be overwritten by cycle 19.

**Input data**

ROTARY AXIS AND ANGLE:
Rotated axis with tilt angle.
Axes A, B and C are programmed with soft keys.

Entry of an angular axis and the associated angle in cycle 19 does not result in movement of the axis. You must move the axis to the corresponding angle, for example with an L block.

**Cancellation**

Define the cycle again, entering NO ENT for all data.

**Position angular axis**

To machine in a tilted plane, the corresponding angular axis is positioned to the required angle conventionally—normally with an L block.

NC blocks

| | |
|---|---|
| *L Z+100 R0 FMAX* | |
| *L X+25 Y+10 R0 FMAX* | |
| ***L A+15** R0 F1000* | Position the angular axis |
| *CYCL DEF 19.0 WORKING PLANE* | |
| *CYCL DEF 19.1 **A+15*** | Define angle for calculation of compensation |
| *L Z+80 R0 FMAX* | Activate compensation, Z axis |
| *L X–7.5 Y–10 R0 FMAX* | Activate compensation, X/Y axis |

**Position display in a tilted system**

Upon activation of cycle 19 the displayed positions (ACTL. and NOML.) and the datum are referenced to the tilted coordinate system. The positions displayed immediately after cycle definition may not be the same as the coordinates of the last programmed position before cycle 19.

As soon as you move an axis in a tilted system, the compensation for this specific axis is activated. You must move all axes to activate compensation for all axes.

**Work space monitoring**

In the tilted coordinate system, the TNC checks for limit switches only in the axes which are moved. An error message will be output if necessary.



Downloaded from www.Manualslib.com manuals search engine

### Combining different coordinate transformation cycles

If you combine different types of coordinate transformation cycles, be sure that the working plane is tilted in relationship to the active datum. If you shift the datum *before* activating cycle 19, the machine-based coordinate system will be shifted. If you shift the datum *after* activating cycle 19, the tilted coordinate system will be shifted. The cycles must be cancelled in the reverse order they were activated in.

**Example:**
1. Activate datum shift
2. Active tilted working plane
3. Activate rotation
.
.
Machining
.
.
1. Cancel rotation
2. Cancel tilted working plane
3. Cancel datum shift

### Automatic measuring in the tilted system

The cycle TCH PROBE 1.0 REF. PLANE (see page 9-21) can be used to measure workpieces in the tilted system. The results of the measurement are stored in Q parameters and are available for further processing such as output to a printer.



Downloaded from www.Manualslib.com manuals search engine

**Guide for working with cycle 19 WORKING PLANE**

**1. Write the program**

- Define the tool (unless TOOL.T is active).
- Call the tool.
- Retract the tool so that during tilting no collision between the tool and the workpiece can occur (fixtures).
- Position angular axes with an L block to the corresponding angle value.
- Activate a datum shift if desired.
- Define cycle 19 WORKING PLANE; enter angle values of the angular axes.
- Move all main axes (X, Y, Z) to activate the compensation.
- Program the machining sequence as if it were performed in the non-tilted plane.
- Cancel cycle 19 WORKING PLANE; enter NO ENT for all angular axes.
- Reset datum shift (if one was active).
- Position angular axes in the 0° position if required.

**2. Insert the tool**

**3. Preparations in the operating mode POSITIONING WITH MANUAL DATA INPUT**

Position the angular axis or axes for setting the datum to the corresponding angle value. The angle value is in relation to the datum you chose on the workpiece.

**4. Preparations in the operating mode MANUAL OPERATION**

Set the function for tilting the working plane to ACTIVE with the soft key 3D ROT for the operating mode MANUAL OPERATION; enter the angle value of the angular axes into the menu (see page 2-11).

The entered angle values must correspond to the actual position of the angular axis or axes, otherwise the TNC will calculate an incorrect datum.

**5. Datum setting**

- Manually, by touching with the tool as in the non-tilted system (see page 2-7)
- Controlled, with a HEIDENHAIN 3D touch probe (see page 9-11)

**6. Start part program in the operating mode PROGRAM RUN FULL SEQUENCE**

**7. Operating mode MANUAL OPERATION**

Set the function for tilting the working plane to INACTIVE with the soft key 3D ROT. Enter angle value 0° into the menu for all angular axes (see page 2-11)



Downloaded from www.Manualslib.com manuals search engine

## 9.1 General Information on Touch Probes

The TNC provides touch probe functions for application of a HEIDENHAIN touch probe. Typical applications for the touch probe systems are automatic datum setting, full-automatic tool measurement and digitizing 3D surfaces. The following 3D touch probe systems are available:

- TM 110 measuring touch probe for quick digitizing (not on TNC 407)
- TS 120 triggering touch probe for cost-effective digitizing
- TS 511 triggering touch probe for machines with automatic tool changers
- TT 110 table-top touch probe for tool measurement

### TM 110 measuring touch probe (not on TNC 407)

The TM 110 measuring touch probe was developed primarily for applications that require frequent digitizing. The TM 110 touch probe enables you to reach digitizing speeds up to 3000 mm/min.

The TNC uses the incremental measuring systems of the touch probe to calculate the position of the ball tip relative to the tool holder. The digitizing software integrated in the TNC then generates a program containing straight line blocks in HEIDENHAIN format from the measured data. This program is output through the data interface and stored in a PC. You can subsequently use the HEIDENHAIN evaluation software SUSA for processing the digitized data, such as calculating male/female transformations, tool paths for tool radii and tool shapes that differ from the shape of the probe stylus tip.

You can also use the TM 110 touch probe – in combination with the TNC's touch probe cycles – for easy datum setting or workpiece measurement.

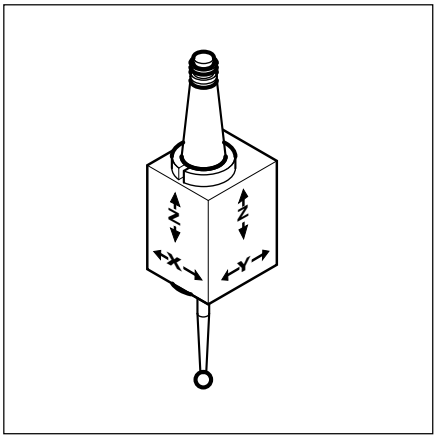

Fig. 9.1 TM 110 measuring touch probe

### TS 120 triggering touch probe

The TS 120 triggering touch probe is a cost-effective alternative for applications where digitizing is not frequently required. The TS 120 touch probe provides digitizing speeds up to 300 mm/min (at a probe point interval of 0.5 mm).

The principle of a triggering touch probe is based on an electrical triggering signal that is generated as soon as the stylus is deflected. The touch probe transmits the signal to the TNC through the connecting cable. Within fractions of a second the TNC calculates the actual position of the touch probe from the machine's position encoders and stores the position data. It then generates a program containing straight line blocks in HEIDENHAIN format from the measured data. This program is output through the data interface and stored in a PC. You can subsequently use the HEIDENHAIN evaluation software SUSA for processing the digitized data, such as calculating male/female transformations, tool paths for tool radii and tool shapes that differ from the shape of the probe stylus tip.

You can also use the TM 110 touch probe – in combination with the TNC's touch probe cycles – for easy datum setting or workpiece measurement.

Fig. 9.2 TS 120 triggering touch probe



Downloaded from www.Manualslib.com manuals search engine

## TS 511 triggering touch probe

The TS 511 triggering touch probe features infrared transmission of the triggering signal to the TNC. This makes it highly convenient for use on machines with automatic tool changers. Functioning of the TS 511 touch probe is based on the same principle as the TS 120 touch probe.

You can also use the TS 511 touch probe – in combination with the TNC's touch probe cycles – for easy datum setting or workpiece measurement.

Fig. 9.3 TS 511 triggering touch probe

## TT 110 touch probe for tool measurement

The TT 110 touch probe is a triggering 3D touch probe system for measuring and checking tools. The measured data can be stored in the central tool file (depending on machine parameter MP 6507).

As with the TS 120 and TS 511 touch probes, the triggering signal is generated by a highly dependable, friction-free optoelectronic switch.

The TT 110 is generally mounted on the machine table. The exact position within the REF system is defined in the TNC with machine parameters.

Due to its rugged construction and high system of protection (IP 67) it is not affected by coolants and swarf.

The TT 110 can be used with three cycles in which you can measure tool length and radius automatically with active or inactive spindle rotation.

Fig. 9.4 TT 110 tool touch probe



Downloaded from www.Manualslib.com manuals search engine

## 9.2 Touch Probe Cycles in the MANUAL and ELECTRONIC HANDWHEEL Operating Modes

- The TNC must be specially prepared by the machine manufacturer for the use of a 3D touch probe.
- If measurements are to be carried out during program run, be sure that the tool data (length, radius, axis) either can be used from the calibrated data or from the last TOOL CALL block (selected with MP7411; see page 12-11).
- If you are working alternately with triggering and measuring test probes, be sure that
  - the correct touch probe is selected with MP 6200 (see page 12-4)
  - the measuring test probe and the triggering test probe are never connected to the control at the same time.

  The TNC cannot tell which probe is actually in the spindle.

After you press the machine START button, the touch probe begins executing the selected probe function. The machine manufacturer sets the feed rate F at which the probe approaches the workpiece in machine parameters. When the 3D touch probe contacts the workpiece, it

- transmits a signal to the TNC: the coordinates of the probed position are stored
- stops moving
- returns to its starting position at rapid traverse.

If the stylus is not deflected within the distance defined in MP6130 (TS 120/TS 511) or MP6330 (TM 110), the TNC displays an error message.

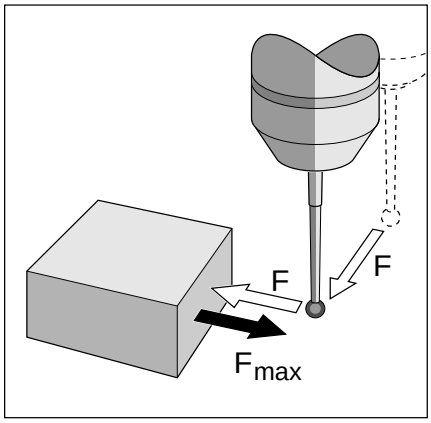

Fig. 9.5: Feed rates during probing

### To select the touch probe functions:

MANUAL OPERATION

or

ELECTRONIC HANDWHEEL

TOUCH PROBE — Select the touch probe functions.

If you are working with the TS 120 or TS 511 touch probe systems, the following soft key row will appear on the TNC screen:

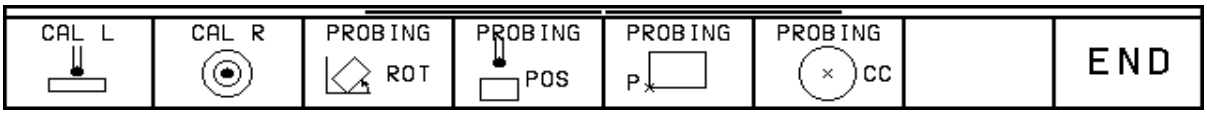


With the measuring touch probe, this soft key row will appear:

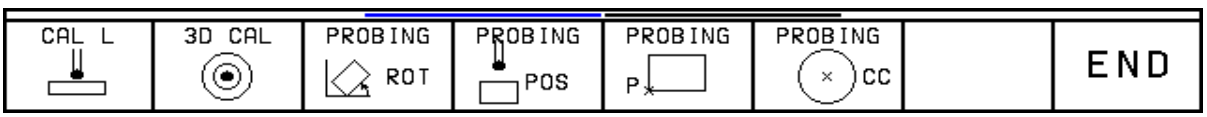




Downloaded from www.Manualslib.com manuals search engine

## Calibrating the TS 120/TS 511 touch probes

The touch probe must be calibrated

- for commissioning
- when the stylus breaks
- when the stylus is changed
- when the probe feed rate is changed
- in case of irregularities, such as those resulting from machine heating.

During calibration, the TNC finds the effective length of the stylus and the effective radius of the ball tip. To calibrate the 3D touch probe, clamp a ring gauge with known height and known internal radius to the machine table.

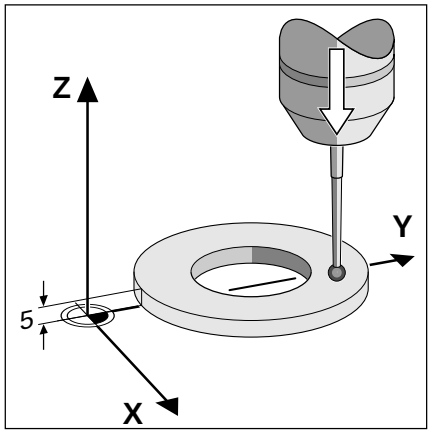

Fig. 9.6: Calibrating the touch probe length

**To calibrate the effective length:**

Set the datum in the tool axis such that for the machine tool table, Z=0.

| | |
|---|---|
| CAL L | Select the calibration function for the touch probe length. |
| **MANUAL OPERATION Z+ Z–** | |
| **TOOL AXIS = Z** | |
| e.g. Z<br>↓<br>e.g. 5 | If necessary, enter the tool axis, here Z.<br>Move the highlight to DATUM.<br>Enter the height of the ring gauge, here 5 mm. |
| Move the touch probe to a position just above the ring gauge. | |
| ← or → | If necessary, change the displayed traverse direction. |
| I | 3D touch probe contacts the upper surface of the ring gauge. |



Downloaded from www.Manualslib.com manuals search engine

**To calibrate the effective radius:**

Position the ball tip in the bore hole of the ring gauge.

**Compensating center misalignment**

After the touch probe is inserted it normally needs to be aligned exactly with the spindle axis. This misalignment is measured with this calibration function and is automatically compensated electronically.

For this operation the 3D touch probe is rotated by 180°. The rotation is initiated by a miscellaneous function that is set by the machine tool builder in the machine parameter MP6160.

The center misalignment is measured after the effective ball tip radius is calibrated.

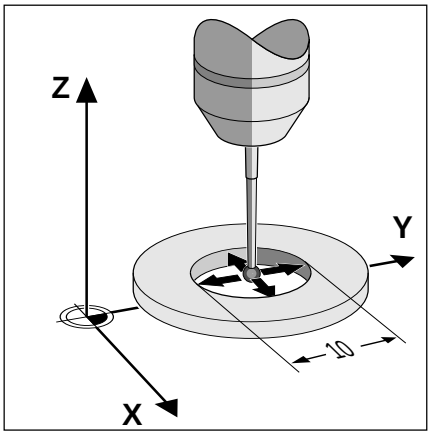


Fig. 9.7: Calibrating the touch probe radius and determining center misalignment

| | |
|---|---|
| CAL R | Select the calibrating function for the ball-tip radius and the touch probe center misalignment. |

**MANUAL OPERATION**

**X+** **X –** **Y +** **Y –**

**TOOL AXIS =** **Z**

**RADIUS RING GAUGE = 0**

| | |
|---|---|
| 4x I | 3D touch probe contacts a position on the bore in each axis direction: The effective ball-tip radius is stored. |

180° | | | | | | | END

| | |
|---|---|
| 180° | Determine the ball-tip center misalignment (or terminate the calibration function with END): rotate the 3D touch probe system by 180°. |
| 4x I | The 3D touch probe contacts one position on the bore hole for each axis direction: store the touch probe center misalignment. |



Downloaded from www.Manualslib.com manuals search engine

### Displaying calibration values

The effective length and radius of the 3D touch probe and the value of center misalignment are strored in the TNC for use whenever the touch probe is needed again. You can display the values on the screen by pressing the soft keys CAL L and CAL R.

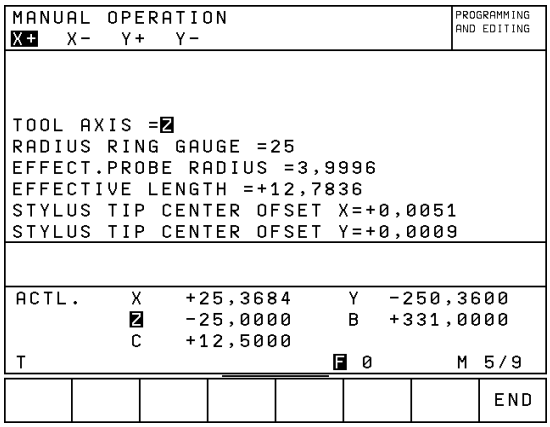


Fig. 9.8: Menu for touch probe radius and center misalignment

## Calibrating the measuring touch probe

- If the error message STYLUS ALREADY IN CONTACT appears, select the menu for 3D calibration and press the soft key RESET 3D.
- The measuring touch probe must be calibrated after every power interruption and every change in the touch probe tool-parameter.
- The effective length is calibrated in the same way as with the triggering touch probes. You must also enter tool radius R2 (corner radius).
- With MP6321 (see page 12-5) you can set whether the TNC calibrates the measuring touch probe with or without automatic probing to find the stylus center.

The TNC calibrates the touch probe in a 3D calibration cycle which full-automatically measures a standard ring gauge (supplied with the touch probe). The standard ring gauge is fixed to the machine table with fixing clamps.

From the data measured during calibration, the TNC calculates the spring rate of the touch probe, the stylus deflection and the stylus center misalignment. At the end of the calibration cycle, these values are automatically stored in the input menu.

Move the touch probe to a position approximately in the center of the standard ring gauge and set it to 180°.

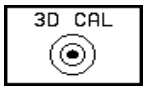


Select the 3D calibration cycle.

**MANUAL OPERATION**
**ROTATE TOUCH PROBE TO 180 DEGREES**

**STYLUS RADIUS 1 =**
**STYLUS RADIUS 2 =**
**DIAMETER RING GAUGE =**

Enter the values for stylus radius 1, stylus radius 2 and ring gauge diameter (engraved on the standard ring gauge).
Enter the same value for stylus radius 1 and 2 if you are using a stylus with a ball tip.
Enter different values for stylus radius 1 and 2 if you are using a stylus with a corner radius.

Start the calibration cycle. The touch probe measures the standard ring gauge in a programmed sequence of steps.



Downloaded from www.Manualslib.com manuals search engine

•
•
•

**MANUAL OPERATION**
**ROTATE TOUCH PROBE TO 0 DEGREES**

Rotate the touch probe to 0° in the manual mode of operation.

| | |
|---|---|
| I | Start the calibration cycle once again to determine center misalignment. The touch probe again measures the standard ring gauge in a programmed sequence of steps. |

### Displaying calibration values

The compensation factors and force ratios are stored in the TNC for use whenever the TM 110 is needed again. You can display the values on the screen by pressing the 3D CAL soft key.

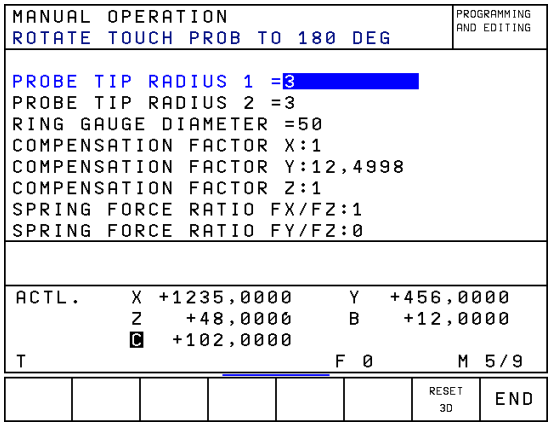


Fig. 9.9: Menu for 3D calibration and center misalignment



Downloaded from www.Manualslib.com manuals search engine

## Compensating workpiece misalignment

The TNC electronically compensates misalignment by computing a "basic rotation". You set the rotation angle to the desired angle with respect to the reference axis in the working plane (see page 1-13).

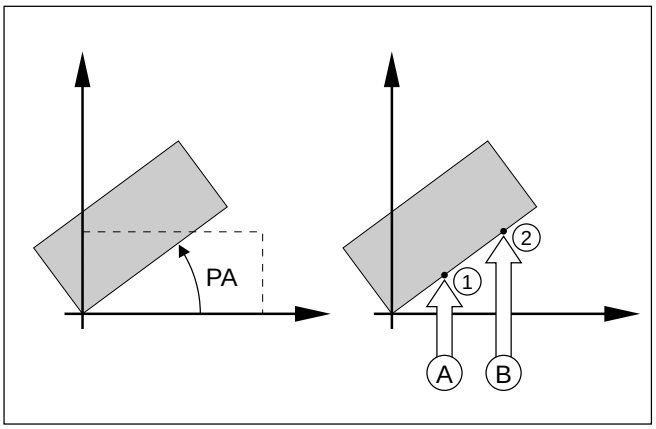


Fig. 9.10: Basic rotation of a workpiece, probing procedure for compensation (right); The dash line is the nominal position; the angle PA is being compensated.

- Select the probe direction perpendicular to the angle reference axis when measuring workpiece misalignment.
- To ensure that the basic rotation is calclulated correctly during program run, program both coordinates of the working plane in the first positioning block.

| | |
|---|---|
| PROBING ROT | Press the PROBING ROT soft key. |
| **ROTATION ANGLE =** | |
| e.g. 0 ENT | Enter the nominal value of the ROTATION ANGLE. |
| Move the ball tip to a starting position Ⓐ near the first touch point ①. | |
| X+ X– Y+ Y– | |
| ← or → | Select the probe direction (perpendicular to the angle reference axis). |
| I | Probe the workpiece. |
| Move the ball tip to a starting position Ⓑ near the second touch point ②. | |
| I | Probe the workpiece. |

A basic rotation is kept in non-volatile storage and is effective for all subsequent program runs and graphic simulation.



Downloaded from www.Manualslib.com manuals search engine

### Displaying a basic rotation

The angle of the basic rotation appears after ROTATION ANGLE whenever PROBING ROT is selected. It is also shown in the additional status display (see page 1-26) under ROTATION.

In the status display a symbol is shown for a basic rotation whenever the TNC is moving the axes according to a basic rotation.

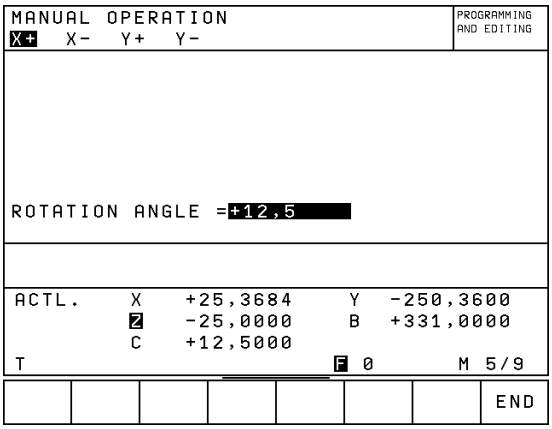


Fig. 9.11: Displaying the angle of an active basic rotation

**To cancel a basic rotation:**

| | |
|---|---|
| PROBING ROT | Select the probe function with the soft key PROBING ROT. |
| **ROTATION ANGLE =** | |
| 0 ENT | Set the ROTATION ANGLE to 0. |
| END | Terminate the probe function. |



Downloaded from www.Manualslib.com manuals search engine

## Setting the datum with a 3D touch probe

The following functions are available for setting the datum on an aligned workpiece:

- Datum setting in any axis with PROBING POS
- Defining a corner as datum with PROBING P
- Setting the datum at a circle center with PROBING CC

**To set the datum in an axis:**

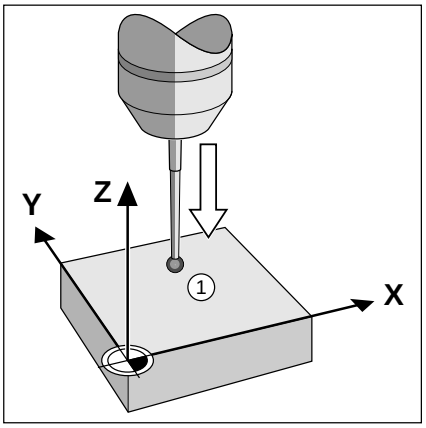


Fig. 9.12: Probing for the datum in the Z axis

| | |
|---|---|
| PROBING POS | Select the probe function with the soft key PROBING POS. |
| Move the touch probe to a point near the touch point. | |
| X+ X– Y+ Y– Z+ Z– | |
| ← or → | Select the probe axis/direction in which you wish to set the datum, such as Z in direction Z–. |
| I | Probe the workpiece. |
| e.g. 0 ENT | Enter the nominal coordinate of the datum. |



Downloaded from www.Manualslib.com manuals search engine

**Corner as datum**

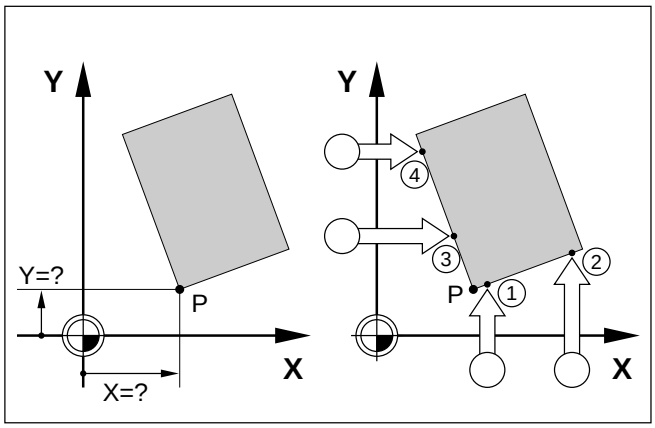


Fig. 9.13: Probing procedure for finding the coordinates of the corner P

| | |
|---|---|
| PROBING P | Select the probe function with the soft key PROBING P. |

**To use the points that were already probed for a basic rotation:**

| TOUCH POINTS OF BASIC ROTATION ? | |
|---|---|
| ENT | Transfer the touch point coordinates to memory. |

Move the touch probe to a starting position near the first touch point of the side that was not probed for basic rotation.

| X+ X– Y+ Y– | |
|---|---|
| ← or → | Select the probe direction. |
| I | Probe the workpiece. |

Move the touch probe to a starting position near the second touch point on the same side.

| | |
|---|---|
| I | Probe the workpiece. |

| DATUM | |
|---|---|
| e.g. 0 ENT | Enter the first coordinate of the datum point, here for the X axis. |

. . .



Downloaded from www.Manualslib.com manuals search engine

. . .

| | |
|---|---|
| ↓ | Select the second coordinate. |

| DATUM | |
|---|---|
| e.g. 0 ENT | Enter the second coordinate of the datum, here in the Y axis. |
| END | Terminate the probe function. |

**If you do not wish to use the points that were already probed for a basic rotation:**

| TOUCH POINTS OF BASIC ROTATION ? | |
|---|---|
| NO ENT | Ignore the previous touch point coordinates. |

Probe both workpiece sides twice.

Enter the coordinates of the datum.



Downloaded from www.Manualslib.com manuals search engine

### Circle center as datum

With this function you can set the datum at the center of bore holes, circular pockets, cylinders, journals, circular islands etc.

| | |
|---|---|
| PROBING CC | Select the probe function with the soft key PROBING CC. |

### Inside circle

The TNC automatically probes the inside wall in all four coordinate axis directions.

For incomplete circles (circular arcs) you can choose the appropriate probing directions.

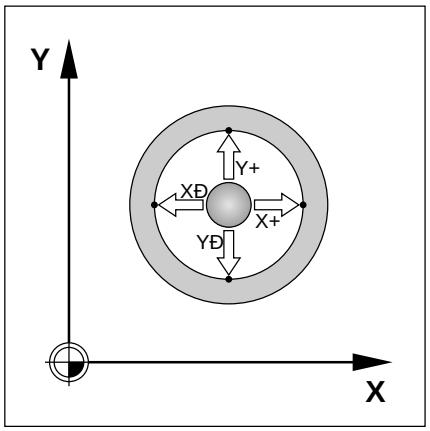


Fig. 9.14: Probing an inside cylindrical surface to find the center

Move the touch probe to a position approximately in the center of the circle.

X + X – Y + Y –

| | |
|---|---|
| 4 x I | The probe touches 4 points on the inside of the circle. |
| 180° 4 x I | To compensate any ball-tip center offset, press the soft key to rotate the touch probe by 180 degrees, and probe the 4 points on the inside cylinder surface again. (This operation is possible only on machines with spindle orientation, defined in MP6160). |
| END | No probing from opposite spindle orientations. |



Downloaded from www.Manualslib.com manuals search engine

| DATUM | |
|---|---|
| e.g. 0 ENT | Enter the first coordinate or the datum, here in the X axis. |
| ↓ | Select the second coordinate. |

| DATUM | |
|---|---|
| e.g. 1 0 ENT | Enter the second coordinate, here in the Y axis. |
| END | Terminate the probe function. |

**Outside circle**

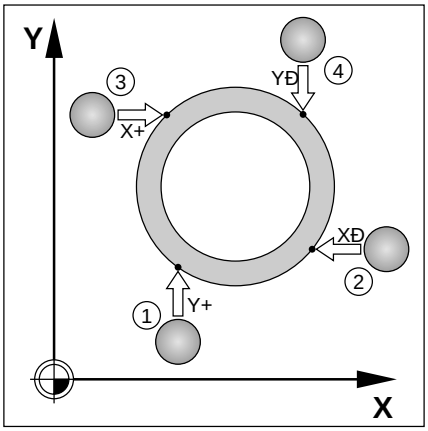


Fig. 9.15: Probing an outside cylindrical surface to find the center

Move the touch probe to a starting position near the first touch point ① outside of the circle.

| X+ X– Y+ Y– | |
|---|---|
| ← or → | Select the probe direction. |
| I | Probe the workpiece. |

Repeat the probing process for points ②, ③, and ④ (see illustration).

Enter the coordinates of the datum.

After the probing procedure is complete the TNC displays the coordinates of the circle center and the circle radius PR.



Downloaded from www.Manualslib.com manuals search engine

### Setting datum points over holes

A second soft-key row provides soft keys for using holes to set datums.

The touch probe is used in the same way as in the function "circle center as datum – inside circle" (see page 9-14). You pre-position it in the approximate center of a hole, then press the machine START button to automatically probe four points in the hole.

Move the touch probe to the next hole and have the TNC repeat the probing procedure until all the holes have been probed to set datums.

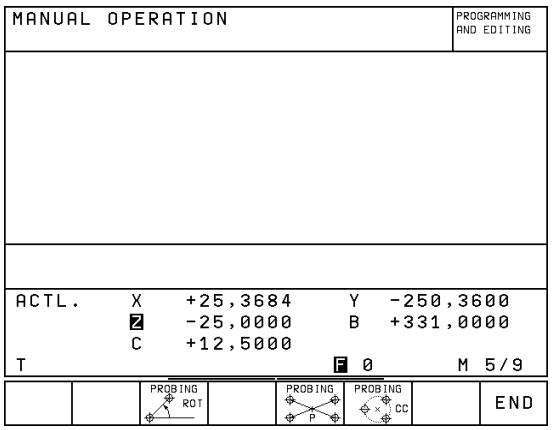


Fig. 9.16: Second soft key row to TOUCH PROBE

| Function | Soft key |
|---|---|
| • Basic rotation from 2 holes: The TNC measures the angle between the line connecting the centers of two holes and a nominal angular position (angle reference axis). | |
| • Datum from 4 holes: The TNC calculates the intersection of the line connecting the first two probed holes with the line connecting the last two probed holes. If a basic rotation was already made from the first two holes, these holes need not be probed again. | 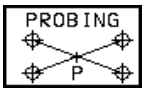  |
| • Circle center from 3 holes: The TNC calculates a circle that intersects the centers of all three holes and finds the center. | |



Downloaded from www.Manualslib.com manuals search engine

## 9.3 Measuring the Workpiece with a 3D Touch Probe

With a 3D touch probe you can determine

- position coordinates, and from them,
- dimensions and angles on the workpiece.

### To find the coordinates of a position on an aligned workpiece

| | |
|---|---|
| 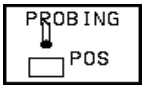  | Select the probe function with the soft key PROBING POS. |

Move the touch probe to a starting position near the touch point.

| X+ | X– | Y+ | Y– | Z+ | Z– |
|---|---|---|---|---|---|

| | |
|---|---|
| 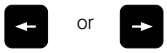  | Select the probe direction/axis of the coordinate. |
| | Probe the workpiece. |

The TNC shows the coordinates of the touch point as DATUM.

### To find the coordinates of a corner in the working plane

Find the coordinates of the corner point as described under "Corner as datum." The TNC displays the coordinates of the probed corner as DATUM.



Downloaded from www.Manualslib.com manuals search engine

## Measuring workpiece dimensions

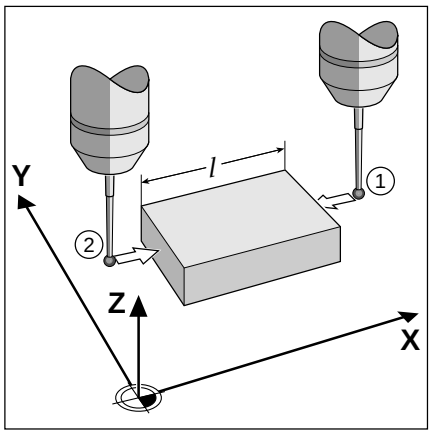


Fig. 9.17: Measuring lengths with the 3D touch probe system

| | |
|---|---|
| PROBING POS | Select the probe function with the soft key PROBING POS. |

Move the touch probe to a starting position near the first touch point ① .

| X+ X– Y+ Y– Z+ Z– | |
|---|---|
| ← or → | Select the probe direction with the cursor keys. |
| I | Probe the workpiece. |

If you will need the current datum later, write down the value that appears in the DATUM display.

| DATUM | |
|---|---|
| 0 ENT | Set the DATUM to 0. |
| END | Terminate the dialog. |
| PROBING POS | Re-select the probe function with the soft key PROBING POS. |

Move the touch probe to a starting position near the second touch point ②.

. . .



Downloaded from www.Manualslib.com manuals search engine

. . .

| X+ | X– | Y+ | Y– | Z+ | Z– |
|---|---|---|---|---|---|

| | |
|---|---|
| ← or → | Select the probe direction with the cursor keys – same axis as for ①. |
| I | Probe the workpiece. |

The value displayed as DATUM is the distance between the two points on the coordinate axis.

**To return to the datum that was active before the length measurement:**

| | |
|---|---|
| PROBING POS | Select the probe function with the soft key PROBING POS. |

Probe the first touch point again.

Set the DATUM to the value that you wrote down previously.

| | |
|---|---|
| END | Terminate the dialog. |

## Measuring angles

You can also use the 3D touch probe system to measure angles in the working plane. You can measure

- the angle between the angle reference axis and a workpiece side, or
- the angle between two sides.

The measured angle is displayed as a value of maximum 90°.

**To find the angle between the angle reference axis and a side of the workpiece:**

| | |
|---|---|
| PROBING ROT | Select the probe function with the soft key PROBING ROT. |

| ROTATION ANGLE |
|---|
| If you will need the current basic rotation later, write down the value that appears under ROTATION ANGLE. |

Make a basic rotation with the side of the workpiece (see "Compensating workpiece misalignment").

. . .



Downloaded from www.Manualslib.com manuals search engine

.
.
.

| | |
|---|---|
| PROBING ROT | The angle between the angle reference axis and the side of the workpiece appears as the ROTATION ANGLE. |

Cancel the basic rotation.

To restore the previous basic rotation:
Set the ROTATION ANGLE to the value that you wrote down previously.

**To measure the angle between two sides of a workpiece:**

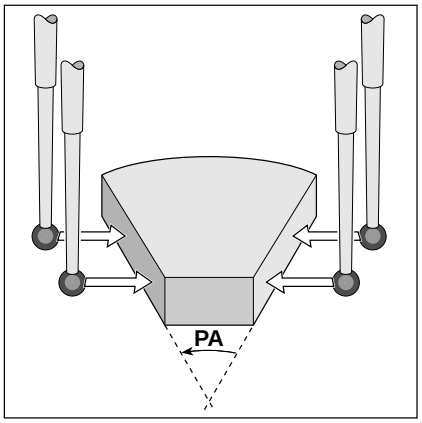


Fig. 9.18: Measuring the angle between two workpiece sides

| | |
|---|---|
| PROBING ROT | Select the probe function with the PROBING ROT soft key. |

**ROTATION ANGLE**

If you will need the current basic rotation later, write down the value that appears under ROTATION ANGLE.

Make a basic rotation for the first side (see “Compensating workpiece misalignment”).

Probe the second side as for a basic rotation, but do not set the ROTATION ANGLE to zero!

| | |
|---|---|
| PROBING ROT | The angle PA between the two sides appears under ROTATION ANGLE. |

Cancel the basic rotation.

To restore the previous basic rotation:
Set the ROTATION ANGLE to the value that you wrote down previously.



Downloaded from www.Manualslib.com manuals search engine

## Measuring with a 3D touch probe during program run

The 3D touch probe can measure positions on the workpiece during a program run (even if the working plane is tilted).

Applications:

- Measure differences in the height of cast surfaces
- Tolerance checking during machining

To program the use of a touch probe, press the TOUCH PROBE key. You pre-position the probe to automatically probe the desired position. The coordinate measured for the probe point is stored under a Q parameter.

The TNC interrupts the probing process if the probe stylus is not deflected within a certain range (selectable via machine parameter).

Upon contact, the position coordinates of the probe are stored in the parameters Q115 to Q119. The stylus length and radius are not included in these values.

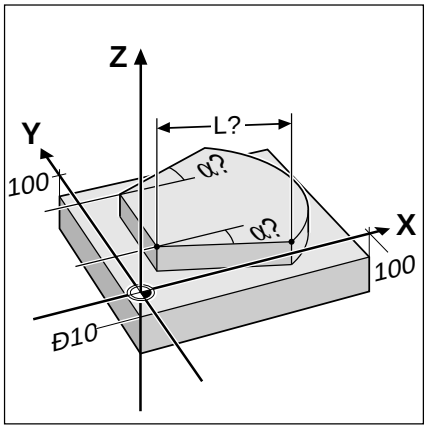


Fig. 9.19: Dimensions to be measured

- Pre-position the touch probe manually where you can be sure that it will not collide with the workpiece.
- Be sure to use the tool data (length, radius, axis) either from the calibrated data or from the last TOOL CALL block. The selection is set by machine parameter MP 7411 (see page 12-11).

**To program the use of a touch probe:**

| | |
|---|---|
| TOUCH PROBE ▶ **TCH PROBE 0: REF. PLANE** | |
| ENT | Select the touch probe function. |
| **PARAMETER NUMBER FOR RESULT ?** | |
| e.g. 5 ENT | Enter the number of the Q parameter to which the coordinate should be assigned, for example Q5. |
| **PROBING AXIS/PROBING DIRECTION ?** | |
| e.g. X | Enter the probing axis for the coordinate, for example X. |
| e.g. –/+ ENT | Select and confirm the probing direction. |
| **POSITION VALUE ?** | |
| e.g. X 5 | Enter all coordinates of the nominal pre-positioning point values, for example X = 5 mm, Y = 0, Z = –5 mm. |
| e.g. Y 0 | |
| e.g. Z –/+ 5 | |
| ENT | Conclude input. |

*Resulting NC blocks:*
*TCH PROBE 0.0 REF. PLANE Q5 X–*
*TCH PROBE 0.1 X+5 Y+0 Z–5*



Downloaded from www.Manualslib.com manuals search engine

**Example: Measuring the height of an island on a workpiece**

Coordinates for pre-positioning the 3D touch probe

| | | |
|---|---|---|
| Touch point 1: | X = + 20 | mm (Q11) |
| | Y = 50 | mm (Q12) |
| | Z = 10 | mm (Q13) |
| Touch point 2: | X = + 50 | mm (Q21) |
| | Y = 10 | mm (Q22) |
| | Z = 0 | mm (Q23) |

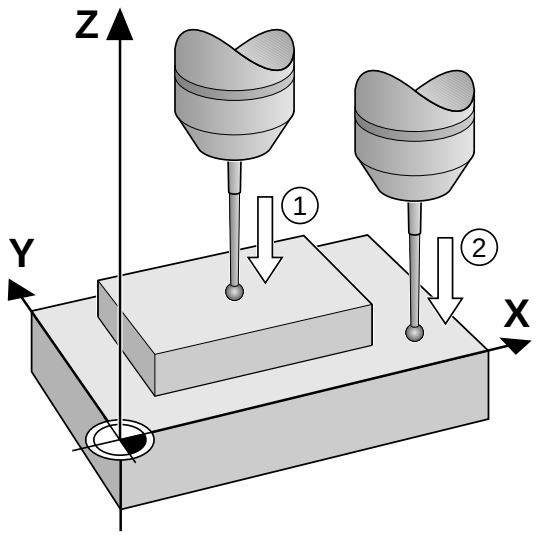


**Part program:**

```
0  BEGIN PGM ISLAND MM
1  FN0: Q11 = + 20
2  FN0: Q12 = + 50
3  FN0: Q13 = + 10
4  FN0: Q21 = + 50
5  FN0: Q22 = + 10
6  FN0: Q23 = + 0
```
Begin the program; Assign the coordinates for pre-positioning the touch probe

```
7  TOOL CALL 0 Z
8  L Z+100 R0 FMAX M6 ..... Insert the touch probe
9  TCH PROBE 0.0 REF. PLANE Q10 Z–
10 TCH PROBE 0.1 X+Q11 Y+Q12 Z+Q13 ..... The Z coordinate probed in the negative direction is stored in Q10 (1st point)
11 L X+Q21 Y+Q22 ..... Auxiliary point for second pre-positioning
12 TCH PROBE 0.0 REF. PLANE Q20 Z–
13 TCH PROBE 0.1 X+Q21 Y+Q22 Z+Q23 ..... The Z coordinate probed in the negative direction is stored in Q20 (2nd point)
14 FN2: Q1 = Q20–Q10 ..... Measure the height of the island and assign to Q1
15 STOP ..... Q1 can be checked after the program run has been stopped (see page 7-14)
16 L Z+100 R0 FMAX M2
17 END PGM ISLAND MM ..... Retract the tool and end the program
```



Downloaded from www.Manualslib.com manuals search engine

## 9.4 Digitizing with a Measuring Touch Probe (Optional; not on TNC 407)

The digitizing option enables you to reduce a three dimensional part model into discrete digital information by scanning it with the TM 110 measuring 3D touch probe.

The following components are required for digitizing:

- Measuring touch probe
- The "Digitizing option" software module in the TNC
- External data storage:
  PC (IBM or compatible) with HEIDENHAIN TNC.EXE data transfer software
- SUSA evaluation software from HEIDENHAIN for further processing of the data digitized in the MEANDER cycle.

The measuring touch probe provides five digitizing cycles:

- TCH PROBE 5.0 RANGE
- TCH PROBE 15.0 RANGE (TABLE)
- TCH PROBE 16.0 MEANDER
- TCH PROBE 17.0 CONTOUR LINES
- TCH PROBE 18.0 LINE

- The TNC and the machine tool must be readied by the machine tool builder for the use of a measuring touch probe.
- The touch probe must be calibrated before digitizing (see page 9-7).
- If you are working alternately with triggering and measuring touch probe systems, ensure that
  - you have selected the correct touch probe in MP 6200 (see page 12-4)
  - the measuring and triggering touch probes are never connected to the TNC at the same time. The TNC cannot determine which of the touch probes is actually inserted in the spindle.

### Principle

The touch probe scans a 3D surface point for point in a selectable grid at the scanning speed programmed in the scanning cycle. You can enter a scanning speed of up to 3000 mm/min.

The TNC transmits the digitized positions as straight-line blocks in HEIDENHAIN format. The interface function PRINT (see page 11-6) determines where the blocks are stored:

- Program memory of the TNC
- External storage via RS-232 interface
- External storage via RS-422 interface

- Digitizing cycles are programmed only for the main axes X, Y and Z and for the rotary axes A, B, and C.
- Coordinate transformations or a basic rotation must not be active during digitizing.
- The TNC outputs the BLK FORM as part of the surface data file, enlarging the blank form defined in the RANGE cycle by twice the value from MP 6310 (see page 12-5).
- Choose the highest possible data transfer speed for the transfer of the digitized data to the PC. Where the probe point intervals are very small, the TNC will reduce the speed accordingly so that the data may be transferred.



Downloaded from www.Manualslib.com manuals search engine

## Defining the digitizing range

The TM 110 touch probe provides two cycles for defining the digitizing range. Cycle 5 RANGE defines a cuboid range within which the touch probe scans the contour. With cycle 15 RANGE (TABLE) you can select a contour point table in which the shape of the digitizing range is defined as a polygon.

### Defining a cuboid digitizing range

The digitizing range is programmed – similar to defining the workpiece blank – by entering the MIN and MAX point coordinates of the three main axes X, Y and Z.

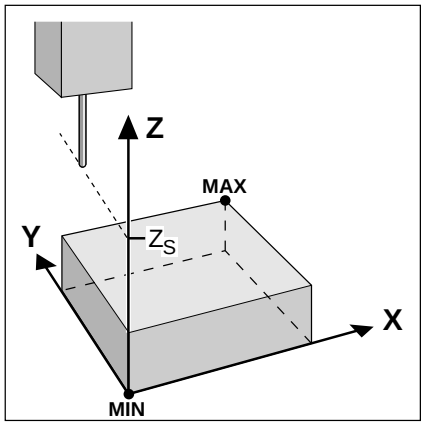


Fig. 9.20: Clearance height and cuboid digitizing range

#### Input

- PGM NAME DIGITIZING DATA?
  Name of the file in which the digitized data is to be stored
- TCH PROBE AXIS ?
  Enter the touch probe axis
- MIN. POINT RANGE
  Lowest coordinates in the range to be digitized
- MAX. POINT RANGE
  Highest coordinates in the range to be digitized
- CLEARANCE HEIGHT
  Position in the probe axis at which the stylus cannot collide with the model



Downloaded from www.Manualslib.com manuals search engine

**To program TCH PROBE 5.0:**

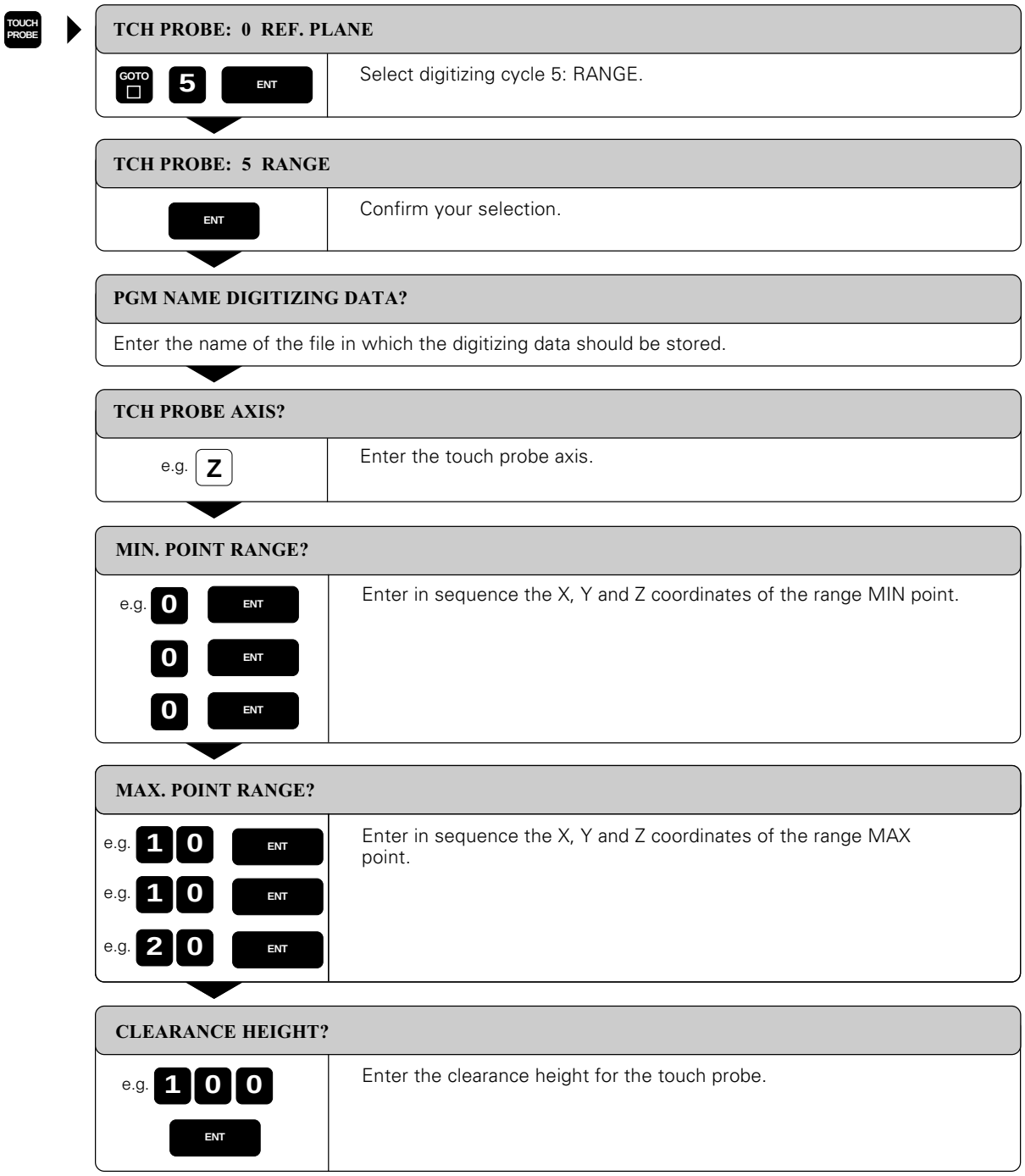


*Resulting NC blocks:*

```
TCH PROBE 5.0 RANGE
TCH PROBE 5.1 PGM NAME: DATA
TCH PROBE 5.2 Z X+0 Y+0 Z+0
TCH PROBE 5.3 X+10 Y+10 Z+20
TCH PROBE 5.4 HEIGHT: + 100
```



Downloaded from www.Manualslib.com manuals search engine

### Defining the digitizing range in a specific shape

The digitizing range is defined by a contour point table generated in the POSITIONING WITH MDI mode of operation (see page 5-75). You can either transfer the individual points by teach-in programming or move the touch probe around the model manually and have the TNC generate them automatically.

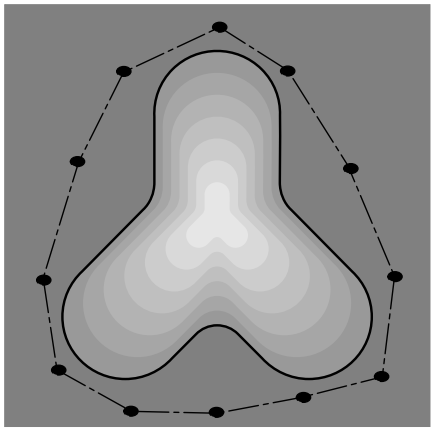

Fig. 9.21: Defining the digitizing range by connecting contour points

### Input

- PGM NAME DIGITIZING DATA ?
  Name of the file in which the digitized data is to be stored
- TCH PROBE AXIS ?
  Enter the touch probe axis
- PGM NAME RANGE DATA ?
  Enter the name of the point table in which you have defined the range
- MIN. POINT TCH PROBE AXIS ?
  Lowest probe axis coordinate in the DIGITIZING range
- MAX. POINT TCH PROBE AXIS ?
  Highest probe axis coordinate in the DIGITIZING range
- CLEARANCE HEIGHT ?
  Position in the probe axis at which the stylus cannot collide with the model

### To program TCH PROBE 15.0:

TOUCH PROBE

**TCH PROBE: 0 REF. PLANE**

GOTO □ 1 5 ENT — Select digitizing cycle 15 RANGE (TABLE).

**TCH PROBE: 15 RANGE (TABLE)**

ENT — Confirm your selection.

**PGM NAME DIGITIZING DATA?**

Enter the name of the file in which the digitizing data should be stored.

**TCH PROBE AXIS?**

e.g. Z — Enter the touch probe axis.

**PGM NAME RANGE DATA ?**

Enter the name of the contour point table in which the range is defined.

. . .



Downloaded from www.Manualslib.com manuals search engine

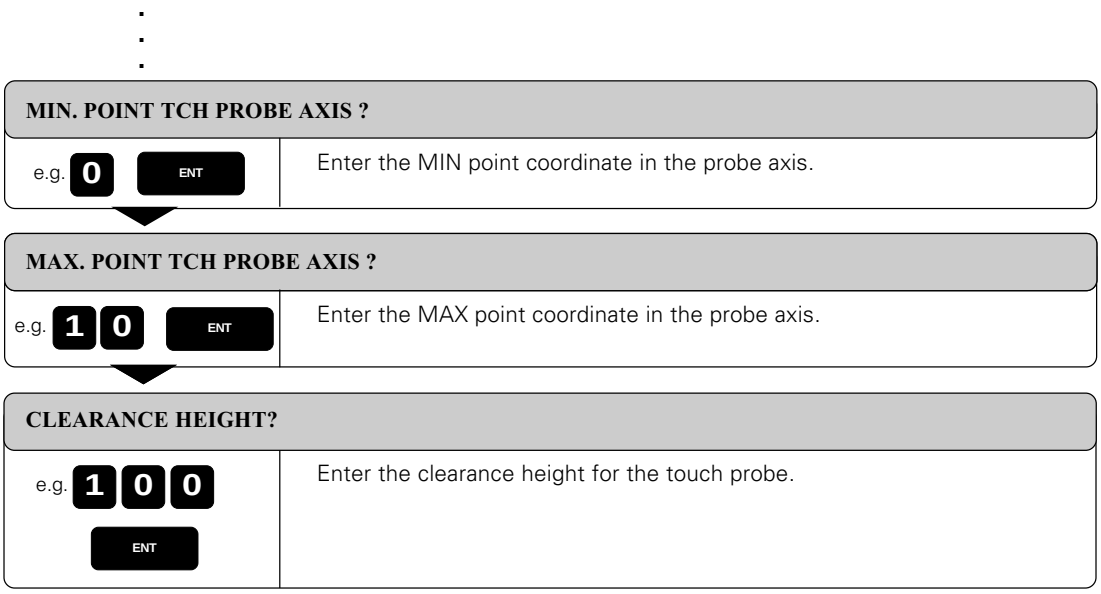


*Resulting NC blocks:*

*TCH PROBE 15.0 RANGE*
*TCH PROBE 15.1 PGM DIGIT.: DATA*
*TCH PROBE 15.2 Z PGM RANGE: TAB1*
*TCH PROBE 15.3 MIN: +0 MAX: +10*
*HEIGHT: + 100*



Downloaded from www.Manualslib.com manuals search engine

## Line-by-line digitizing with cycle 16 MEANDER

The MEANDER cycle scans and digitizes a 3D contour in a back-and-forth series of parallel lines. This process is particularly useful for digitizing relatively flat surfaces. The HEIDENHAIN evaluation software SUSA can only process data resulting from digitizing in the MEANDER cycle.

In cycle 16 MEANDER, the touch probe moves in the positive direction of the axis entered under DIRECTION. When the touch probe reaches the MAX coordinate on this axis, it moves by the line spacing (L.SPAC) in the positive direction of the other axis in the working plane (i.e. in the column direction). It then moves back in the negative line direction, and at the other end moves again by the programmed L.SPAC. This process repeats itself until the entire range has been scanned.

Once the entire range is scanned, the touch probe returns to the CLEARANCE HEIGHT.

By entering a scanning angle you can select the most efficient direction for scanning asymmetric ranges, in which the lines to be scanned are as long as possible.

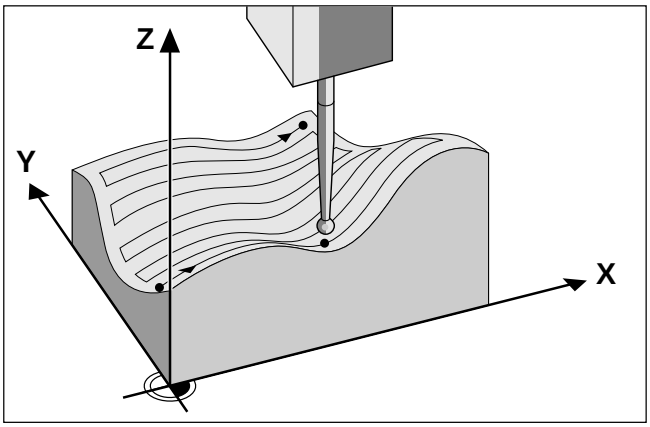

Fig. 9.22: Digitizing a 3D contour with the MEANDER cycle

### Starting position

- Coordinates from cycle 5 RANGE or cycle 15 RANGE (TABLE):
  X and Y coordinates of the MIN point
  Z coordinate = CLEARANCE HEIGHT
- Automatically move to the starting position:
  first in Z to CLEARANCE HEIGHT, then in X and Y

### Contour approach

The touch probe moves in the negative Z direction toward the model. When it makes contact, the TNC stores position coordinates.



Downloaded from www.Manualslib.com manuals search engine

**Input data**

- LINE DIRECTION
  Coordinate axis in whose positive direction the touch probe moves from the first contour point.
- SCANNING ANGLE
  Traversing direction of the touch probe referenced to the LINE DIRECTION.
  Input range: -90° to +90°
- FEED RATE F
  Enter the digitizing speed.
  Input range: 1 to 3000 mm/min
  The greater the digitizing speed, the less accurate the data resulting from digitizing will be.
- MIN. LINE SPACING
  If you enter an input value that is smaller than the programmed LINE SPACING the TNC decreases the spacing between the scanned lines to the programmed minimum for digitizing steep sections of a contour. This ensures that the density of digitized positions remains constant even if complex surface structures are scanned.
  Input range: 0 to 20 mm
- LINE SPACING
  The offset by which the probe moves at the end of each line before scanning the next line.
  Input range: 0 to 20 mm
- MAX. PROBE POINT INTERVAL
  Maximum spacing between consecutive digitized positions. The TNC also accounts for important points that define the contour of the model, for example at inside corners.
  Input range: 0.02 to 20 mm
- TOLERANCE
  The TNC only stores digitized positions whose distance from a straight line defined by the last two probe points exceeds the programmed tolerance. This way a high density of digitized positions is output for contours with sharply curved surfaces while as few positions as possible are stored for contours with flat surfaces. The input value 0 means that the digitized positions are output in the programmed probe point interval.
  Input range: 0 to 0.9999 mm

**To program TCH PROBE 16.0:**

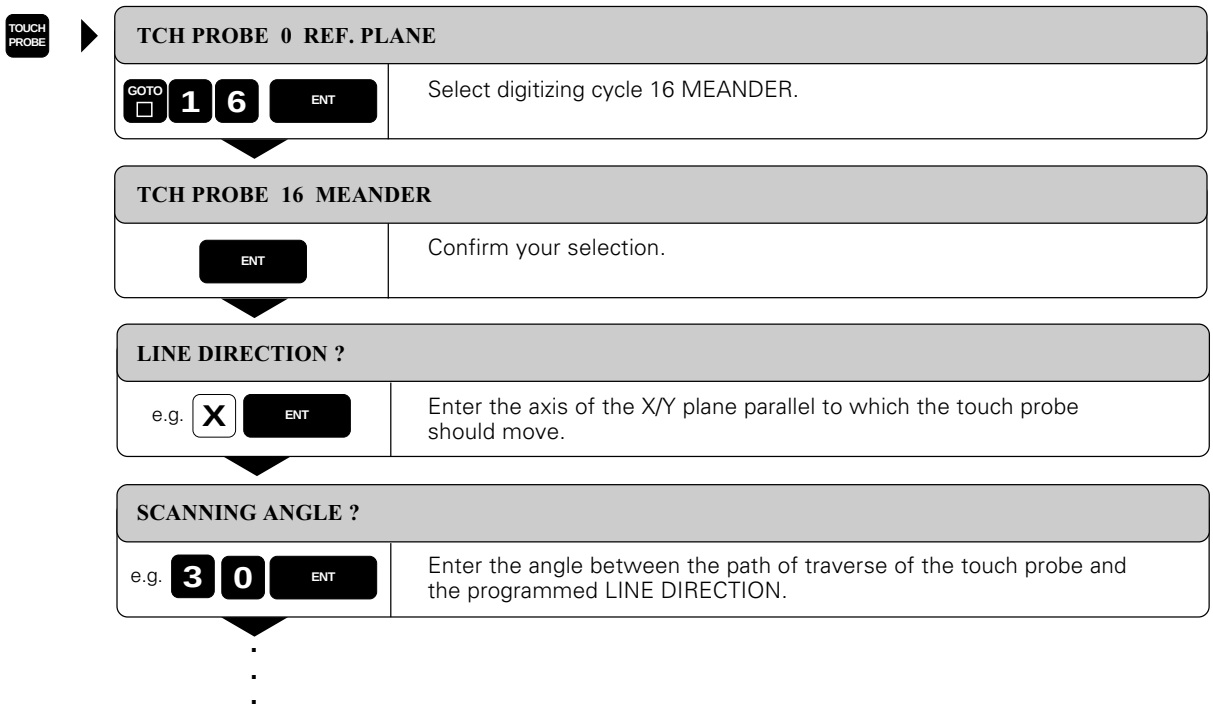




Downloaded from www.Manualslib.com manuals search engine

.
.
.

**FEED RATE ? F=**

e.g. 1 0 0 0 ENT

Enter the digitizing speed, for example 1000 mm/min.

**MIN. LINE SPACING ?**

e.g. 0 • 2 ENT

Enter the minimum spacing between lines, for example 0.2 mm.

**LINE SPACING ?**

e.g. 0 • 5 ENT

Enter the maximum spacing between lines, for example 0.5 mm.

**MAX. PROBE POINT INTERVAL ?**

e.g. 0 • 5 ENT

Enter the maximum probe point interval, for example 0.5 mm.

**TOLERANCE ?**

e.g. 0 • 1 ENT

Enter the diameter of the tubular tolerance zone, for example 0.1 mm.

*Resulting NC blocks:*

```
TCH   PROBE   16.0  MEANDER
TCH   PROBE   16.1  DIRECTN: X
  ANGLE
TCH   PROBE   16.2  F1000 MIN.L.SPAC: 0.2
  L.SPAC: 0.5 PP.INT: 0.5 TOL: 0.1
```

Before cycle 16: MEANDER, the program must have a range defined in cycle 5: RANGE or cycle 15: RANGE (TABLE).



Downloaded from www.Manualslib.com manuals search engine

## Contour line digitizing with cycle 17 CONTOUR LINES

The CONTOUR LINES cycle scans a 3D contour by circling around the model in a series of upwardly successive levels. This cycle is particularly useful for digitizing steep contours, such as the gating of injection molding dies, or for digitizing a single contour line, such as the contour of a cam disk.

The touch probe starts scanning in the direction that you entered as STARTING PROBE AXIS AND DIRECTION at a **constant level**. When the touch probe has orbited the form and has returned to the first probe point, it then moves in the positive or negative direction of the probe axis by the LINE SPACING. The process repeats itself for the rest of the range.

Once the entire range is scanned, the touch probe returns to the CLEARANCE HEIGHT and the programmed starting position.

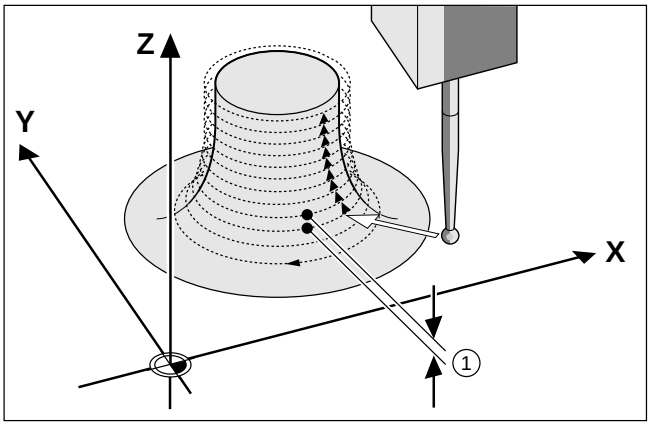

Fig. 9.23 Digitizing a 3D contour with the CONTOUR LINES cycle

### Limits of the scanning range

- In the touch probe axis:
  The defined RANGE must be lower that the highest point of the 3D model by at least the radius of the probe tip.
- In the plane perpendicular to the touch probe:
  The defined RANGE must be larger than the 3D model by at least the radius of the probe tip.

### Starting position

- Z coordinate of the MIN point from cycle 5 RANGE or cycle 15 RANGE (TABLE), if the LINE SPACING is entered as a positive value, or Z coordinate of the MAX POINT if the LINE SPACING was entered as a negative value.
- Define X and Y coordinates in the CONTOUR LINES cycle
- Automatically approach the starting point:
  first in Z to the CLEARANCE HEIGHT, then in X and Y

### Contour approach

The touch probe moves toward the surface in the programmed direction. When it makes contact, the TNC stores position coordinates.



Downloaded from www.Manualslib.com manuals search engine

**Input data**

- TIME LIMIT
  Time within which the touch probe must have orbited the model and reached the first touch point. You can define a maximum distance from the end point to the starting point with machine parameter MP 6390 (see page 12-5). If the entered time limit is exceeded, the TNC interrupts the digitizing cycle.
  Input range: 0 to 7200 seconds
  The input value 0 means there is no time limit.
- STARTING POINT
  Coordinates of the starting position in the plane perpendicular to the probe axis.
- AXIS AND DIRECTION OF APPROACH
  Coordinate axis and direction in which the probe approaches the model.
- STARTING PROBE AXIS AND DIRECTION
  Coordinate axis and direction in which the probe begins scanning the model. Defining the direction at the same time determines whether the subsequent machining operation is performed by up-cut or climb milling.
- FEED RATE F
  Enter the digitizing speed.
  Input range: 1 to 3000 mm/min
  The greater the digitizing speed, the less accurate the data resulting from digitizing will be.
- MIN. LINE SPACING
  If you enter an input value that is smaller than the programmed LINE SPACING the TNC decreases the spacing between the scanned lines to the programmed minimum for digitizing steep sections of a contour. This ensures that the density of digitized positions remains constant even if complex surface structures are scanned.
  Input range: 0 to 20 mm
- LINE SPACING AND DIRECTION
  The offset by which the probe moves to start a new contour line after completing the previous one.
  Input range: –20 to +20 mm

If you only want to digitize one contour line, then enter the value 0 for both MIN. LINE SPACING and LINE SPACING

- MAX. PROBE POINT INTERVAL
  Maximum spacing between consecutive digitized positions. The TNC also accounts for important points that define the contour of the model, for example at inside corners.
  Input range: 0.02 to 20 mm
- TOLERANCE
  The TNC only stores digitized positions whose distance from a straight line defined by the last two probe points exceeds the programmed tolerance. This way a high density of digitized positions is output for contours with sharply curved surfaces while as few positions as possible are stored for contours with flat surfaces. The input value 0 means that the digitized positions are output in the programmed probe point interval.
  Input range: 0 to 0.9999 mm



Downloaded from www.Manualslib.com manuals search engine

**To program TCH PROBE 7.0:**

TOUCH PROBE

**TCH PROBE 0 REF. PLANE**

GOTO □ 1 7 ENT — Select the scanning cycle 17: CONTOUR LINES.

**TCH PROBE 17 CONTOUR LINES**

ENT — Confirm your selection.

**TIME LIMIT ?**

e.g. 0 ENT — Enter the time limit within which one contour must be scanned, for example 0 seconds (no time limit).

**STARTING POINT ?**

e.g. X 0 Y 0 ENT — Enter the coordinates of the starting position, for example X+0, Y+0.

**AXIS AND DIRECTION OF APPROACH ?**

e.g. Y – ENT — Enter the approach direction, for example Y–.

**STARTING PROBE AXIS AND DIRECTN ?**

e.g. X – ENT — Enter the starting direction, for example X–.

**FEED RATE ? F**

e.g. 1 0 0 0 ENT — Enter the digitizing speed, for example 1000 mm/min.

**MIN. LINE SPACING ?**

e.g. 0 • 2 ENT — Enter the minimum spacing between lines, for example 0.2 mm.

. . .



Downloaded from www.Manualslib.com manuals search engine

.
.
.

**LINE SPACING AND DIRECTION ?**

e.g. 0 • 5 ENT

Enter the maximum line spacing, for example +0.5 mm. The algebraic sign determines the direction in which the probe moves to start the next contour line.

**MAX. PROBE POINT INTERVAL ?**

e.g. 0 • 5 ENT

Enter the maximum probe point interval, for example 0.5 mm.

**TOLERANCE ?**

e.g. 0 • 1 ENT

Enter the diameter of the tubular tolerance zone, for example 0.1 mm.

*Resulting NC blocks:*

```
TCH   PROBE   17.0  CONTOUR LINES
TCH   PROBE   17.1  TIME:  0  X+0  Y+0
TCH   PROBE   17.2  ORDER:  Y– /  X–
TCH  PROBE    17.3 F1000
  MIN.L.SPAC: 0.2  L.SPAC: 0.5
  PP.INT: 0.5 TOL: 0.1
```

Before cycle 17: CONTOUR LINES, the program must have a range defined in cycle 5: RANGE or cycle 15: RANGE (TABLE).



Downloaded from www.Manualslib.com manuals search engine

## Line-by-line digitizing with cycle 18 LINE

The LINE cycle scans and digitizes a 3D contour in a series of parallel lines. This process is mainly used for digitizing with a rotary axis (see page 9-39).

In cycle 18 LINE, the touch probe moves in the positive direction of the axis entered under DIRECTION. When the touch probe reaches the MAX coordinate on this axis, it returns to CLEARANCE HEIGHT. It then moves at rapid traverse back to the beginning of the next line and from there in the negative Z direction to the HEIGHT FOR FEED RATE DECREASE. From this point it continues moving at the probing feed rate until it contacts the 3D contour. This process repeats itself until the entire range has been scanned.

Once the entire range is scanned, the touch probe returns to the CLEARANCE HEIGHT.

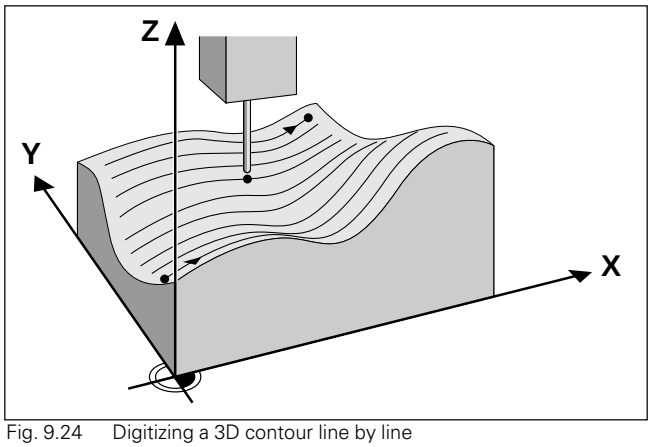

Fig. 9.24 Digitizing a 3D contour line by line

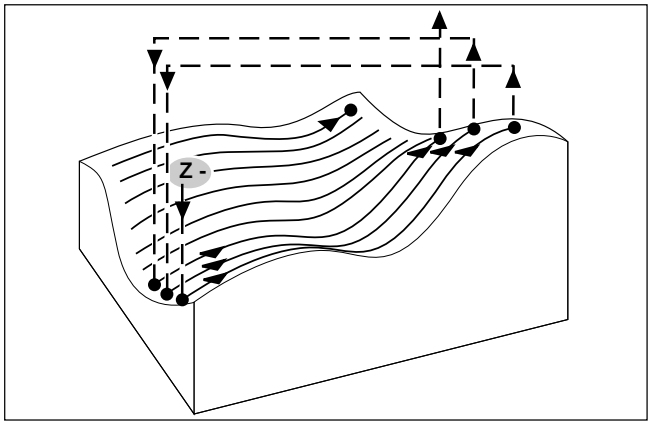

Fig. 9.25 Paths of traverse of the touch probe in the LINE cycle

### Starting position

- Coordinates from cycle 5 RANGE or cycle 15 RANGE (TABLE):
  X and Y coordinates of the MIN point
  Z coordinate = CLEARANCE HEIGHT
- Automatically move to the starting position: first in Z to CLEARANCE HEIGHT, then in X and Y

### Contour approach

The touch probe moves in the negative Z direction toward the model. When it makes contact, the TNC stores position coordinates.



Downloaded from www.Manualslib.com manuals search engine

**Input data**

- LINE DIRECTION
  Coordinate axis of the X/Y plane parallel to which the touch probe scans the model. The digitizing direction at the same time defines whether the subsequent machining operation is performed by up-cut or climb milling.
- SCANNING ANGLE
  Traversing direction of the touch probe referenced to the LINE DIRECTION. By combining LINE DIRECTION and SCANNING ANGLE you can set the digitizing direction as desired.
  Input range: –90° to +90°
- HEIGHT FOR FEED RATE DECREASE
  Z coordinate at which the touch probe feed rate is reduced from rapid traverse to the probing feed rate at the beginning of each line.
  Input range: –99999.9999 to +99999.9999
- FEED RATE F
  Enter the digitizing speed.
  Input range: 1 to 3000 mm/min
  The greater the digitizing speed, the less accurate the data resulting from digitizing will be.
- MIN. LINE SPACING
  If you enter an input value that is smaller than the programmed LINE SPACING the TNC decreases the spacing between the scanned lines to the programmed minimum for digitizing steep sections of a contour. This ensures that the density of digitized positions remains constant even if complex surface structures are scanned.
  Input range: 0 to 20 mm
- LINE SPACING
  The offset by which the probe moves at the end of each line before scanning the next line.
  Input range: 0 to 20 mm
- MAX. PROBE POINT INTERVAL
  Maximum spacing between consecutive digitized positions.
  Input range: 0.02 to 20 m
- TOLERANCE
  The TNC only stores digitized positions whose distance from a straight line defined by the last two probe points exceeds the programmed tolerance. This way a high density of digitized positions is output for contours with sharply curved surfaces while as few positions as possible are stored for contours with flat surfaces. The input value 0 means that the digitized positions are output in the programmed probe point interval.
  Input range: 0 to 0.9999 mm



Downloaded from www.Manualslib.com manuals search engine

**To program TCH PROBE 18.0:**

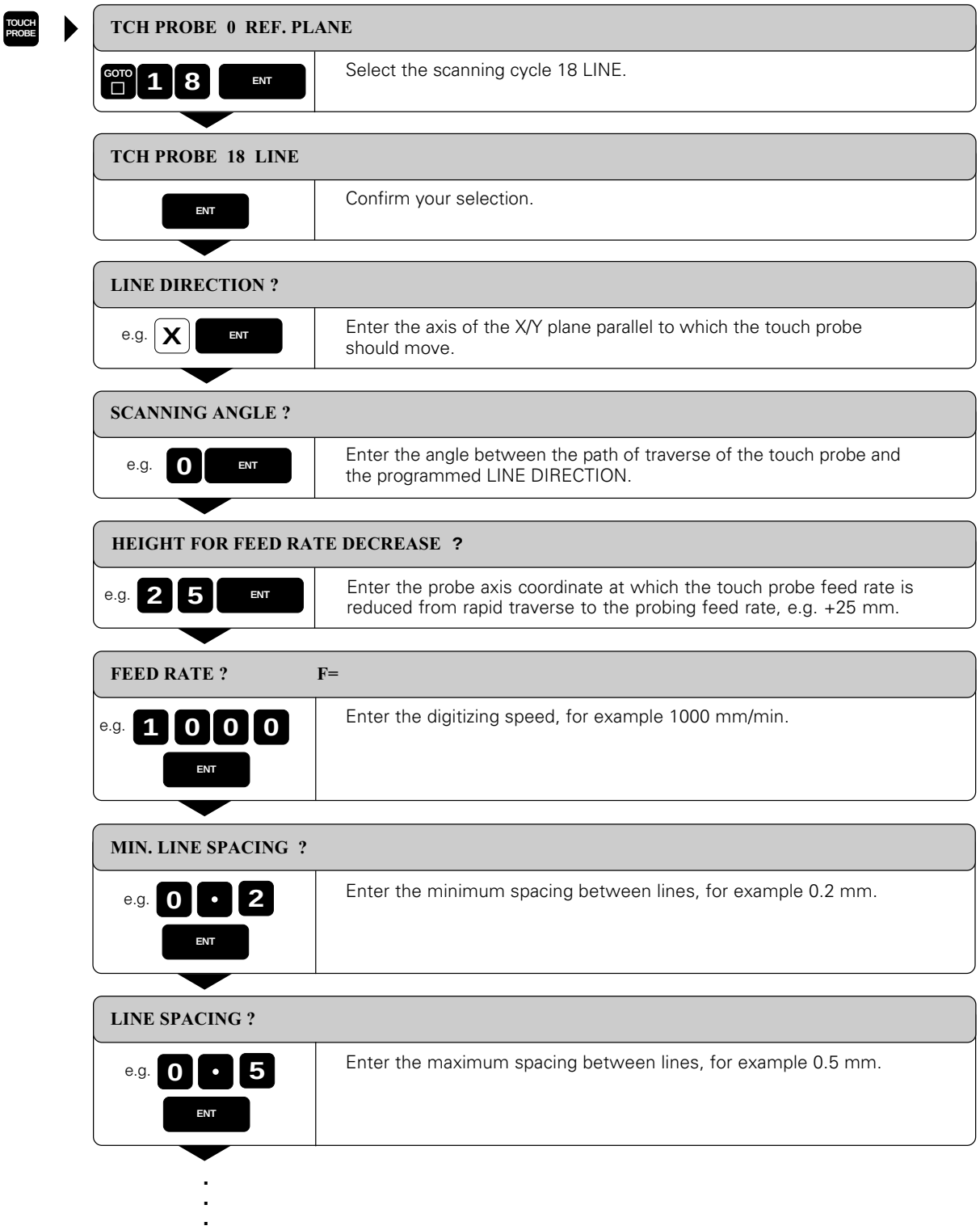




Downloaded from www.Manualslib.com manuals search engine

.
.
.

| MAX. PROBE POINT DISTANCE ? | |
|---|---|
| e.g. 0 • 5 ENT | Enter the maximum probe point interval, for example 0.5 mm. |

| TOLERANCE ? | |
|---|---|
| e.g. 0 • 1 ENT | Enter the diameter of the tubular tolerance zone, e.g. 0.1 mm. |

*Resulting NC blocks:*

```
TCH   PROBE   18.0  LINE
TCH   PROBE   18.1  DIRECTN:  X
  ANGLE:  0   HEIGHT:  25
TCH   PROBE   18.2  F1000
  MIN.L.SPAC:   0.2   L.SPAC:   0.5
  PP.INT:   0.5   TOL:   0.1
```

Before cycle 18: LINE, the program must have a range defined in cycle 5: RANGE or cycle 15: RANGE (TABLE).



Downloaded from www.Manualslib.com manuals search engine

## Digitizing with a rotary axis

The digitizing feature supports rotary axes with cycle 18 LINE. The rotary axis must be defined as a column axis.

### Digitized data

The digitized data contains position information in the axes that are identified in the RANGE cycle. A BLK FORM is not generated, since rotary axes cannot be graphically simulated.

The display mode of the rotary axis (i.e. whether the display reduces the values to below 360° or not) must agree for digitizing and for milling .

### LINE cycle with a rotary axis

If you enter a linear axis (e.g. X) in the input parameter LINE DIRECTION the TNC moves the rotary axis (e.g. A) entered in the RANGE cycle by the line spacing L.SPAC as soon as it reaches the end of the line.

*Example NC blocks:*

```
TCH   PROBE  5.0   RANGE
TCH   PROBE  5.1   PGMNAME: DATRND
TCH   PROBE  5.2   Z  X+0 A+0 Z+0
TCH   PROBE  5.3      X+85 A+270 Z+25
TCH  PROBE  5.4   HEIGHT:   50

TCH   PROBE  18.0  LINE
TCH   PROBE  18.1  DIRECTN:  X
  ANGLE:  0   HEIGHT:  25
TCH   PROBE  18.2  F1000
  MIN.L.SPAC:   0.2   L.SPAC:   0.5
  PP.INT:   0.5   TOL:   0.1
```

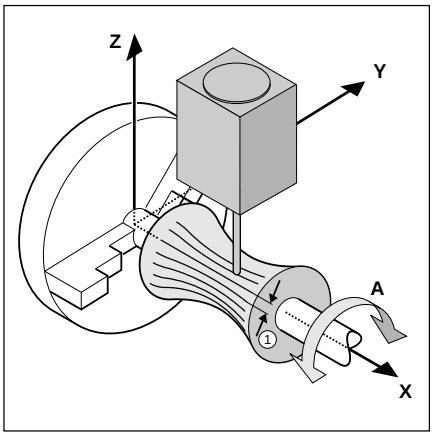


Fig. 9.26: Line by line digitizing with a rotary axis, line direction X, column direction A; ① : L.SPAC

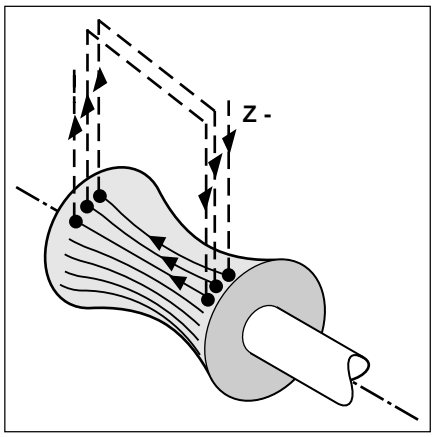


Fig. 9.27: Paths of traverse of the touch probe during line-by-line digitizing in a rotary axis



Downloaded from www.Manualslib.com manuals search engine

## 9.5 Digitizing with the TS 120 Touch Probe (Optional)

The digitizing option enables you to reduce a three-dimensional part model into discrete digital information by scanning it with the TS 120 triggering 3D touch probe.

The following components are required for digitizing:

- The TS 120 triggering touch probe
- The "Digitizing option" software module in the TNC
- External data storage:
  PC (IBM or compatible) with HEIDENHAIN TNC.EXE data transfer software
- SUSA evaluation software from HEIDENHAIN for further processing of the data digitized in the MEANDER cycle.

The TS 120 triggering touch probe provides four digitizing cycles:

- TCH PROBE 5.0 RANGE
- TCH PROBE 6.0 MEANDER
- TCH PROBE 7.0 CONTOUR LINES
- TCH PROBE 8.0 LINE

- The TNC and the machine tool must be readied by the machine tool builder for the use of a TS 120 touch probe.
- The touch probe must be calibrated before digitizing (see page 9-5).
- If you are working alternately with triggering and measuring touch probe systems, ensure that
  - you have selected the correct touch probe in MP 6200 (see page 12-4)
  - the measuring and triggering touch probes are never connected to the TNC at the same time. The TNC cannot determine which of the touch probes is actually inserted in the spindle.

### Principle

The touch probe scans a 3D surface point for point in a selectable grid. The scanning speeds vary from 200 to 800 mm/min (when PP.INT = 1 mm).

The TNC transmits the digitized positions as straight-line blocks in HEIDENHAIN format. The interface function PRINT (see page 11-6) determines where the blocks are stored:

- Program memory of the TNC
- External storage via RS-232 interface
- External storage via RS-422 interface

- Digitizing cycles are programmed only for the main axes X, Y and Z and for the rotary axes A, B, and C.
- Coordinate transformations or a basic rotation must not be active during digitizing.



Downloaded from www.Manualslib.com manuals search engine

## Defining the digitizing range

The digitizing range is defined in cycle 5 RANGE. The model to be scanned must lie within this range. The range is programmed – similar to defining the workpiece blank – by entering the MIN and MAX point coordinates of the three main axes X, Y and Z.

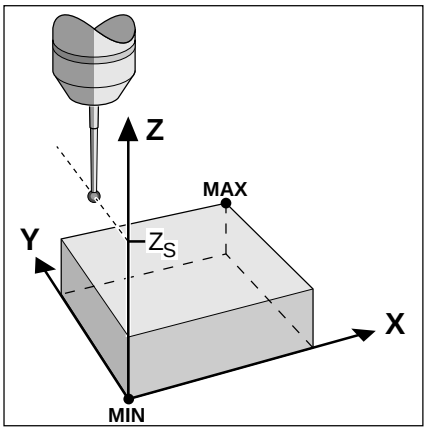


Fig. 9.28: Clearance height and digitizing range

### Input

- PGM NAME DIGITIZING DATA?
  Name of the file in which the digitized data is to be stored
- TCH PROBE AXIS ?
  Enter the touch probe axis
- MIN. POINT RANGE
  Lowest coordinates in the range to be digitized
- MAX. POINT RANGE
  Highest coordinates in the range to be digitized
- CLEARANCE HEIGHT
  Position in the probe axis at which the stylus cannot collide with the model



Downloaded from www.Manualslib.com manuals search engine

**To program TCH PROBE 5.0:**

TOUCH PROBE

**TCH PROBE: 0 REF. PLANE**

GOTO □ 5 ENT — Select digitizing cycle 5: RANGE.

**TCH PROBE: 5 RANGE**

ENT — Confirm your selection.

**PGM NAME DIGITIZING DATA?**

Enter the name of the file in which the digitizing data should be stored.

**TCH PROBE AXIS?**

e.g. Z — Enter the touch probe axis.

**MIN. POINT RANGE?**

e.g. 0 ENT
0 ENT
0 ENT

Enter in sequence the X, Y and Z coordinates of the range MIN point.

**MAX. POINT RANGE?**

e.g. 1 0 ENT
e.g. 1 0 ENT
e.g. 2 0 ENT

Enter in sequence the X, Y and Z coordinates of the range MAX point.

**CLEARANCE HEIGHT?**

e.g. 1 0 0 ENT

Enter the clearance height for the touch probe.

*Resulting NC blocks:*

```
TCH PROBE 5.0 RANGE
TCH PROBE 5.1 PGM NAME: DATA
TCH PROBE 5.2 Z X+0 Y+0 Z+0
TCH PROBE 5.3 X+10 Y+10 Z+20
TCH PROBE 5.4 HEIGHT: + 100
```



Downloaded from www.Manualslib.com manuals search engine

## Line-by-line digitizing with cycle 6 MEANDER

The MEANDER cycle scans and digitizes a 3D contour in a back-and-forth series of parallel lines. This process is particularly useful for digitizing relatively flat surfaces. The HEIDENHAIN evaluation software SUSA can only process data resulting from digitizing in the MEANDER cycle.

In cycle 6 MEANDER, the touch probe moves in the positive direction of the axis entered under DIRECTION. When the touch probe reaches the MAX coordinate on this axis, it moves by the line spacing (L.SPAC) in the positive direction of the other axis in the working plane (i.e. in the column direction). It then moves back in the negative line direction, and at the other end moves again by the programmed L.SPAC. This process repeats itself until the entire range has been scanned.

Once the entire range is scanned, the touch probe returns to the CLEARANCE HEIGHT.

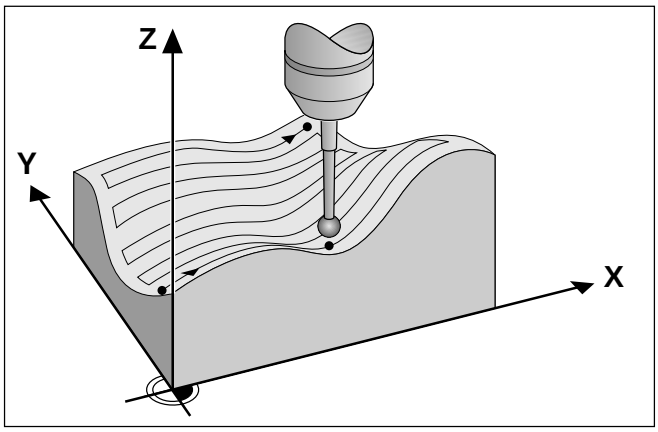

Fig. 9.29: Digitizing a 3D contour with the MEANDER cycle

### Starting position

- Coordinates from the RANGE cycle:
  X and Y coordinates of the MIN point
  Z coordinate = CLEARANCE HEIGHT
- Automatically move to the starting position:
  first in Z to CLEARANCE HEIGHT, then in X and Y

### Contour approach

The touch probe moves in the negative Z direction toward the model. When it makes contact, the TNC stores position coordinates.

### Input data

- LINE DIRECTION
  Coordinate axis in whose positive direction the touch probe moves from the first contour point.
- LIMIT IN NORMAL LINES DIRECTION
  Distance by which the touch probe lifts off the model surface after each deflection of the stylus during scanning.
  Input range: 0 to 5 mm
  Recommended input value: Enter an input value between half the PROBE POINT INTERVAL and the PROBE POINT INTERVAL. The smaller the ball tip radius, the larger the LIMIT IN NORMAL LINES DIRECTION should be programmed.
- LINE SPACING
  The offset by which the probe moves at the end of each line before scanning the next line.
  Input range: 0 to 5 mm
- MAX. PROBE POINT INTERVAL
  Maximum spacing between consecutive digitized positions.
  Input range: 0.02 to 5 mm



Downloaded from www.Manualslib.com manuals search engine

**To program TCH PROBE 6.0:**

| | |
|---|---|
| **TCH PROBE: 0 REF. PLANE** | |
| GOTO □ 6 ENT | Select the digitizing cycle 6 MEANDER. |
| **TCH PROBE: 6 MEANDER** | |
| ENT | Confirm your selection. |
| **LINE DIRECTION?** | |
| e.g. X ENT | Enter the line direction, for example X. |
| **LIMIT IN NORMAL LINES DIRECTION?** | |
| e.g. 0 • 5 ENT | Enter the distance of travel by which the probe lifts off the surface during scanning, for example 0.5 mm. |
| **LINE SPACING?** | |
| e.g. 0 • 2 ENT | Enter the desired spacing between lines, for example 0.2 mm. |
| **MAX. PROBE POINT INTERVAL?** | |
| e.g. 0 • 5 ENT | Enter the maximum probe point interval, for example 0.5 mm. |

*Resulting NC blocks:*

*TCH PROBE 6.0 MEANDER*
*TCH PROBE 6.1 DIRECTN: X*
*TCH PROBE 6.2 TRAVEL: 0.5 L.SPAC: 0.2 PP.INT: 0.5*

Before cycle 6: MEANDER, the program must have a range defined in digitizing cycle 5: RANGE.



Downloaded from www.Manualslib.com manuals search engine

## Contour line digitizing with cycle 7 CONTOUR LINES

The CONTOUR LINES cycle scans a 3D contour by circling around the model in a series of upwardly successive levels. This cycle is particularly useful for digitizing steep contours, such as the gating of injection molding dies, or for digitizing a single contour line, such as the contour of a cam disk.

The touch probe starts scanning in the direction that you entered as STARTING PROBE AXIS AND DIRECTION at a **constant level**. When the touch probe has orbited the form and has returned to the first probe point, it then moves in the positive or negative direction of the probe axis by the LINE SPACING. The process repeats itself for the rest of the range.

Once the entire range is scanned, the touch probe returns to the CLEARANCE HEIGHT and the programmed starting position.

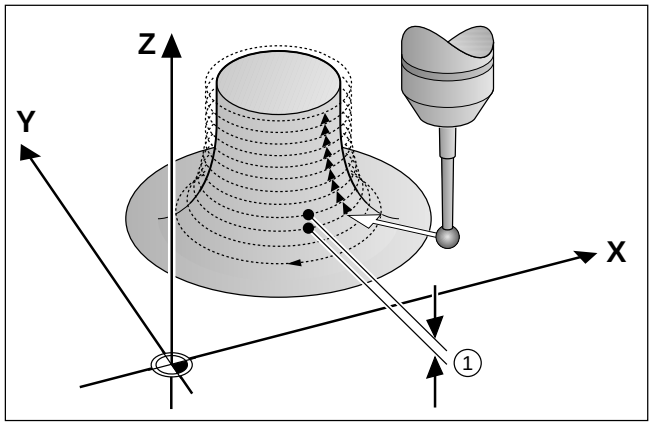

Fig. 9.30: Digitizing with the CONTOUR LINES cycle; ①= L.SPAC

### Limits of the scanning range

- In the touch probe axis:
  The defined RANGE must be lower that the highest point of the 3D model by at least the radius of the probe tip.
- In the plane perpendicular to the touch probe:
  The defined RANGE must be larger than the 3D model by at least the radius of the probe tip.

### Starting position

- Z coordinate of the MIN point from the RANGE cycle, if the LINE SPACING is entered as a positive value, or Z coordinate of the MAX POINT if the LINE SPACING was entered as a negative value.
- Define X and Y coordinates in the CONTOUR LINES cycle
- Automatically approach the starting point:
  first in Z to the CLEARANCE HEIGHT, then in X and Y

### Contour approach

The touch probe moves toward the surface in the programmed direction. When it makes contact, the TNC stores position coordinates.



Downloaded from www.Manualslib.com manuals search engine

**Input data**

- TIME LIMIT
  Time within which the touch probe must have orbited the model and reached the first touch point to within on fourth of the programmed probe point interval. If the entered time limit is exceeded, the TNC interrupts the digitizing cycle.
  Input range: 0 to 7200 seconds
  The input value 0 means there is no time limit.
- STARTING POINT
  Coordinates of the starting position in the plane perpendicular to the probe axis.
- AXIS AND DIRECTION OF APPROACH
  Coordinate axis and direction in which the probe approaches the model.
- STARTING PROBE AXIS AND DIRECTION
  Coordinate axis and direction in which the probe begins scanning the model. Defining the direction at the same time determines whether the subsequent machining operation is performed by up-cut or climb milling.
- LIMIT IN NORMAL LINES DIRECTION
  Distance by which the touch probe moves away from the model surface after each deflection of the stylus during scanning.
  Input range: 0 to 5 mm
  Recommended input value: Enter an input value between half the PROBE POINT INTERVAL and the PROBE POINT INTERVAL. The smaller the ball tip radius, the larger the LIMIT IN NORMAL LINES DIRECTION should be programmed.
- LINE SPACING AND DIRECTION
  The offset by which the probe moves to start a new contour line after completing the previous one. The algebraic sign sets the direction.
  Input range: –5 to +5 mm
- MAX. PROBE POINT INTERVAL
  Maximum distance between digitized positions.
  Input range: 0.02 to 5 mm



Downloaded from www.Manualslib.com manuals search engine

**To program TCH PROBE 7.0:**

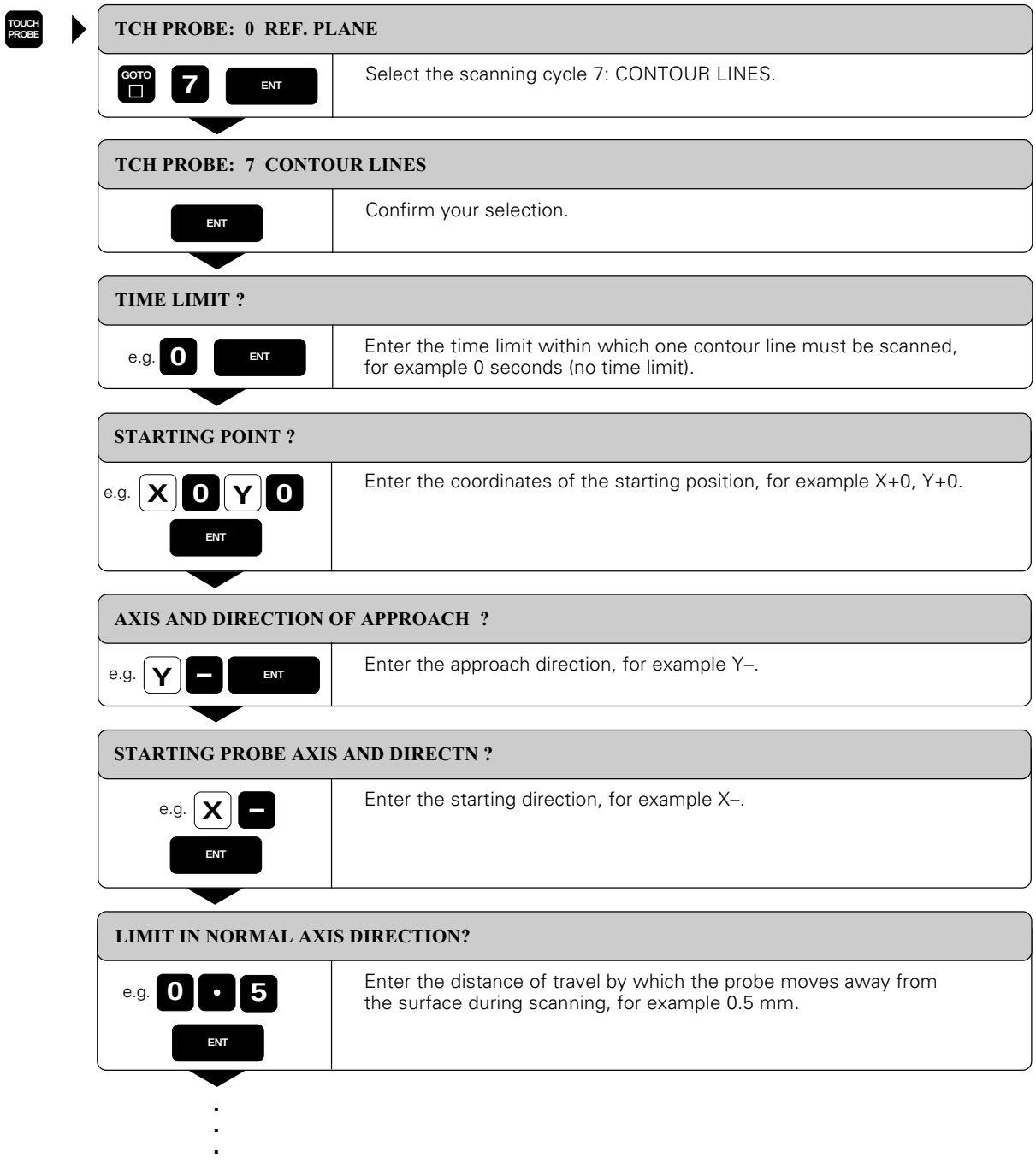




Downloaded from www.Manualslib.com manuals search engine

.
.
.

**LINE SPACING AND DIRECTION ?**

e.g. 0 • 2 ENT

Enter the line spacing, for example +0.2 mm. The algebraic sign determines the direction in which the probe moves to start the next contour line.

**MAX. PROBE POINT INTERVAL?**

e.g. 0 • 5 ENT

Enter the maximum probe point interval, for example 0.5 mm

*Resulting NC blocks:*

```
TCH  PROBE  7.0  CONTOUR LINES
TCH  PROBE  7.1  TIME: 0 X+0 Y+0
TCH  PROBE  7.2  ORDER: Y– / X–
TCH  PROBE  7.3  TRAVEL: 0.5 L.SPAC: +0.2
 PP.INT: 0.5
```

Before cycle 7: CONTOUR LINES, the program must have a range defined in digitizing cycle 5: RANGE.

The TNC generates an NC part program from the digitized data. The program name is entered in the scanning cycle RANGE.

During program execution, the tool radius determines the shape of the machined contour.

**When the tool radius equals the effective probe tip radius**

The program can be run without any changes. The model that has been scanned is reproduced.

**When the tool radius does not equal the effective probe tip radius**

The machined part is either smaller or larger than the model.



Downloaded from www.Manualslib.com manuals search engine

## Line-by-line digitizing with cycle 8 LINE

The LINE cycle scans and digitizes a 3D contour in a series of parallel lines. This process is particularly useful for digitizing relatively flat surfaces which are to be machined without prior evaluation of the data resulting from digitizing.

In cycle 8 LINE, the touch probe moves in the positive or negative direction of the axis entered under DIRECTION. When the touch probe reaches the MAX coordinate on this axis, it returns to CLEARANCE HEIGHT. It then moves at rapid traverse back to the beginning of the next line and from there in the negative Z direction to the HEIGHT FOR FEED RATE DECREASE. From this point it continues moving at the probing feed rate until it contacts the 3D contour. This process repeats itself until the entire range has been scanned.

Once the entire range is scanned, the touch probe returns to the CLEARANCE HEIGHT.

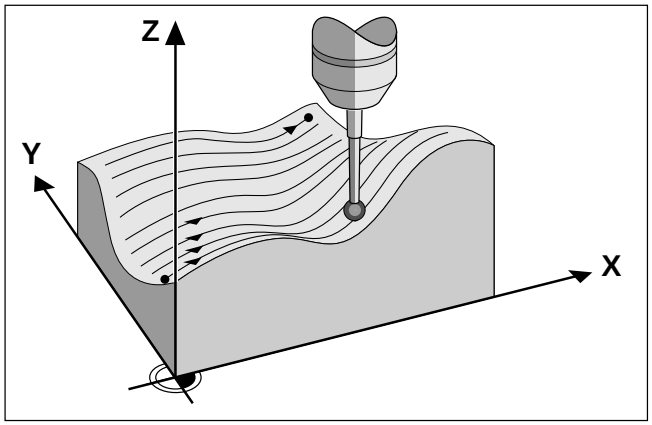

Fig. 9.31 Digitizing a 3D contour with the LINE cycle

### Starting position

- Positive or negative MAX point coordinates in the programmed LINE DIRECTION (depending on the digitizing direction)
- MIN point coordinates from cycle 5 RANGE of the programmed column
- Z coordinate = CLEARANCE HEIGHT

### Contour approach

The touch probe moves in the negative Z direction toward the model. When it makes contact, the TNC stores position coordinates.

### Input data

- LINE DIRECTION
  Coordinate axis of the X/Y plane parallel to which the touch probe scans the model. The algebraic sign determines the starting point and the direction in which the touch probe begins scanning the model. The digitizing direction at the same time defines whether the subsequent machining operation is performed by up-cut or climb milling.
- HEIGHT FOR FEED RATE DECREASE
  Z coordinate at which the touch probe feed rate is reduced from rapid traverse to the probing feed rate at the beginning of each line.
  Input range: –99999.9999 to +99999.9999
- LIMIT IN NORMAL LINES DIRECTION
  Distance by which the touch probe lifts off the model surface after each deflection of the stylus during scanning.
  Input range: 0 to 5 mm
  Recommended input value: Enter an input value between half the PROBE POINT INTERVAL and the PROBE POINT INTERVAL. The smaller the ball tip radius, the larger the LIMIT IN NORMAL LINES DIRECTION should be programmed.
- LINE SPACING
  The offset by which the probe moves at the end of each line before scanning the next line.
  Input range: 0 to 5 mm
- MAX. PROBE POINT INTERVAL
  Maximum spacing between consecutive digitized positions.
  Input range: 0.02 to 5 mm



Downloaded from www.Manualslib.com manuals search engine

**To program TCH PROBE 8.0:**

TOUCH PROBE

**TCH PROBE: 0 REF. PLANE**

GOTO □ 8 ENT — Select the scanning cycle 8 LINE.

**TCH PROBE: 8 LINE**

ENT — Confirm your selection.

**LINE DIRECTION ?**

e.g. X – ENT — Enter the line direction, for example –X.

**HEIGHT FOR FEED RATE DECREASE ?**

e.g. 1 2 ENT — Enter the probe axis coordinate at which the probing feed rate is reduced from rapid traverse to the probing feed rate, e.g. +12 mm.

**LIMIT IN NORMAL LINES DIRECTION?**

e.g. 0 • 5 ENT — Enter the distance of travel by which the probe lifts off the surface during scanning, for example 0.5 mm.

**LINE SPACING?**

e.g. 0 • 2 ENT — Enter the desired spacing between lines, for example 0.2 mm.

**MAX. PROBE POINT INTERVAL?**

e.g. 0 • 5 ENT — Enter the maximum probe point interval, for example 0.5 mm.

*Resulting NC blocks:*

*TCH PROBE 8.0 LINE*
*TCH PROBE 8.1 DIRECTN: X–*
*TCH PROBE 8.2 TRAVEL: 0.5 L.SPAC: 0.2 PP.INT: 0.5*

Before cycle 8: LINE, the program must have a range defined in digitizing cycle 5: RANGE.



Downloaded from www.Manualslib.com manuals search engine

## Digitizing with a rotary axis

The digitizing feature supports rotary axes with the cycles MEANDER (cycle 6), LINE (cycle 8) or CONTOUR LINE (cycle 7). Regardless of the digitizing cycle used, the corresponding rotary axis must be entered in the RANGE cycle. The TNC interprets the rotary axis input as values in degrees.

### Digitized data

The digitized data contains position information in the axes that are identified in the RANGE cycle. A BLK FORM is not generated, since rotary axes cannot be graphically simulated.

The display mode of the rotary axis (i.e. whether the display reduces the values to below 360° or not) must agree for digitizing and for milling .

### MEANDER cycle with a rotary axis

If you enter a linear axis in the input parameter LINE DIRECTION the TNC moves the rotary axis entered in the RANGE cycle by the line spacing L.SPAC as soon as it reaches the end of the line. If the line direction is the linear axis X, and L.SPAC is in A, then the touch probe oscillates in the Z/X plane.

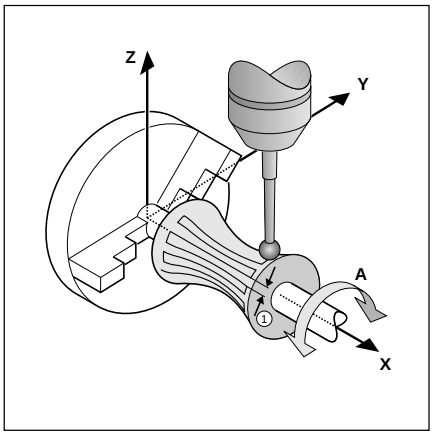


Fig. 9.32: Line-by-line digitizing with a rotary axis, line direction X; ① : L.SPAC

If you define the line direction as a rotary axis, the TNC moves the linear axis entered in the RANGE cycle by the line spacing L.SPAC as soon as it reaches the end of the line. If the line direction is the rotary axis A, and L.SPAC is in the linear axis X, then the touch probe oscillates in the Z/A plane.

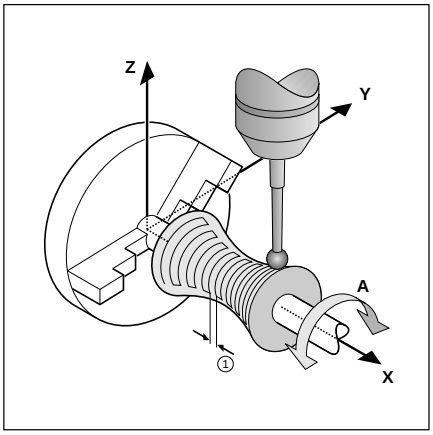


Fig. 9.33: Line-by-line digitizing with a rotary axis, line direction A; ① : L.SPAC



Downloaded from www.Manualslib.com manuals search engine

*Example NC program blocks:*

```
TCH  PROBE  5.0   RANGE
TCH  PROBE  5.1   PGMNAME: DATRND
TCH  PROBE  5.2   Z  X+0 A+0 Z+0
TCH  PROBE  5.3      X+85 A+270 Z+65
TCH  PROBE  5.4   HEIGHT:  50

TCH  PROBE  6.0   MEANDER
TCH  PROBE  6.1   DIRECTN: A   Defines the A axis as line direction
                                (see Fig. 9.7)
TCH  PROBE  6.2   TRAVEL: 0.3  L.SPAC: 0.5  PP.INT: 0.5
```

**CONTOUR LINES cycle with a rotary axis**

Define the starting point in a linear axis and in a rotary axis. Define also the order and direction of axis approach. If the starting point lies in the X and C axes, then the touch probe oscillates in the X/C plane.
This method also works well for machines that have only two linear axes (e.g. Z/X) and one rotary axis (e.g. C).

*Example NC program blocks:*

```
TCH  PROBE  5.0   RANGE
TCH  PROBE  5.1   PGMNAME: DATH
TCH  PROBE  5.2   Z  X–50 C+0 Z+0
TCH  PROBE  5.3      X+50 C+360 Z+85
TCH PROBE   5.4   HEIGHT:  50

TCH  PROBE  7.0   CONTOUR LINES
TCH  PROBE  7.1   TIME: 250 X+80 C+0
TCH  PROBE  7.2   ORDER: X–/C+
TCH  PROBE  7.3   TRAVEL 0.3  L.SPAC: –0.5  PP.INT: 0.5
```

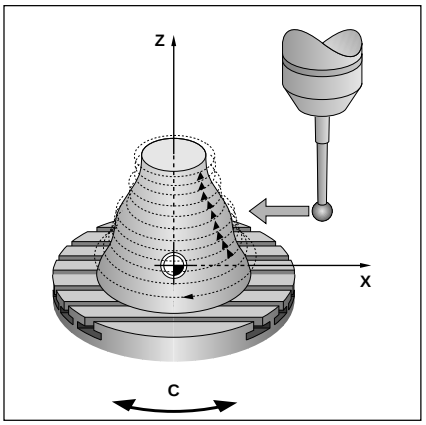


Fig. 9.34: Line-by-line digitizing with a rotary axis, line direction C;
① : L.SPAC

The direction of rotation defined behind ORDER is valid for all levels (lines). This ensures that the workpiece is then machined consistently either in up-cut or in climb milling.



Downloaded from www.Manualslib.com manuals search engine

## 9.6 Using Digitized Data in a Part Program

**Program example with digitized data from the CONTOUR LINES cycle**

```
0  BEGIN PGM DATA MM ..... Program name DATA.H is entered in the RANGE cycle
1  BLK FORM 0.1 Z X–40 Y–20 Z+0
2  BLK FORM 0.2 X+40 Y+40 Z+7
3  L Z+40 FMAX ..... Move to clearance height
4  L X+0 Y–25 FMAX ..... Starting point in X, Y
5  L Z+7 ..... Starting height Z depending on the sign of the line spacing
6  L X+2.005 Y–12.561 ..... 1st digitized position
7  L X+2.025 Y–12.375 ..... 2nd digitized position


   L X+2.005 Y–12.560 ..... A contour line has been completed: probe has returned to the
                            1st digitized position


   L Z+0.5 X+0 Y–10.423 ..... 1st digitized position at the height of the new line


   L X+2.005 Y–12.558 ..... Last digitized position


   L X+0 Y–25 FMAX ..... Back to starting point in X, Y
   L Z+40 FMAX ..... Back to clearance height
   END PGM DATA MM ..... Program end
```

**Note:**

- The feed rate of the touch probe system for approaching the starting point and departing the end point is set in machine parameters for the touch probe.
- Program length is limited only by the capacity of the external storage device.
- The touch probe scans the contour up to the next contour line.
- The TNC automatically marks the program beginning and end for data transfer.



Downloaded from www.Manualslib.com manuals search engine

## Executing a part program from digitized data

The surface data program is called from another program containing the following data:

- Tool radius and length
- Feed rate of tool
- Radius compensation
- Spindle axis and rpm
- Miscellaneous function for spindle ON

The program must contain the following five lines:

```
0  BEGIN PGM NAME MM ..... Any name
1  TOOL DEF 1 L+30 R+4 ..... Tool data
2  TOOL CALL 1 Z S1000 ..... Tool axis and spindle speed in rpm
3  L R0 F500 M3 ..... No tool radius compensation, milling feed rate, spindle ON
4  CALL PGM EXT: DATA ..... Program call for digitized data from an external storage device
5  END PGM NAME MM
```

At the end of the surface data program from the CONTOUR LINES cycle the tool is returned to the programmed starting point.



Downloaded from www.Manualslib.com manuals search engine

## 9.7 Measuring Tools with the TT 110 Touch Probe

The TNC and the machine tool must be set up by the machine tool builder for use of the TT 110. Tool measurement is possible with the TT 110 only on machines with controlled spindle (spindle orientation).

In conjunction with the TNC's tool measurement cycles, the TT 110 enables you to measure tools automatically. The compensation values for tool length and radius can be stored in the central tool file TOOL.T and are accounted for in the next tool call. The following types of tool measurement are provided:

- Tool measurement while the tool is at standstill
- Tool measurement while the tool is rotating
- Measurement of individual tool teeth

The tool measurement cycles are defined in the PROGRAMMING AND EDITING mode of operation and are executed in a program run mode of operation. The following cycles are available:

- TCH PROBE 30.0 TT CALIBRATE
- TCH PROBE 31.0 TOOL LENGTH
- TCH PROBE 32.0 TOOL RADIUS

- The measuring cycles can only be used when the central tool file TOOL.T is active.
- Before working with the measuring cycles, you must first enter all the required data into the central tool file (see page 4-11) and call the tool to be measured.

**Setting the machine parameters**

For measuring a stationary tool, the TNC uses the probing feed rate from MP6520 (see page 12-6).

When measuring a rotating tool, the TNC automatically calculates the spindle speed and probing feed rate. The spindle speed is calculated as follows:

$$n = \frac{MP6570}{2 \cdot \pi \cdot r \cdot 0.001}$$

| | | |
|---|---|---|
| where | n = | Spindle speed [rpm] |
| | MP6570 = | Maximum permissible surface cuttingspeed [m/min] |
| | r = | Active tool radius [mm] |

The probe feed rate is calculated from:

$$v = \text{Measuring tolerance} \cdot n$$

| | | |
|---|---|---|
| where | v = | Probing feed rate [mm/min] |
| | Measuring tolerance = | Measuring tolerance [mm], depending on MP6507 |
| | n = | Spindle speed [rpm] |

MP6507 selects the method of calculating the probing feed rate (see also page 12-6):

**MP6507=0:** The measuring tolerance remains constant — regardless of the tool radius. On very large tools, however, the probing feed rate then approaches zero. The smaller the maximum surface cutting speed (MP6570), and the smaller the permissible tolerance (MP6510), the earlier this effect becomes noticeable.



Downloaded from www.Manualslib.com manuals search engine

**MP6507=1:** The measuring tolerance increases with increasing tool radius. This ensures that a probing feed rate is maintained even for large tool radii. The TNC changes the measuring tolerance according to the following table:

| Tool radius | Measuring tolerance |
|---|---|
| Up to 30 mm | MP6510 |
| 30 to 60 mm | 2 • MP6510 |
| 60 to 90 mm | 3 • MP6510 |
| 90 to 120 mm | 4 • MP6510 |

**MP6507=2:** The probing feed rate remains constant, however the measuring error grows in linear proportion to any increase in tool radius:

$$\text{Measuring tolerance} = \frac{r \cdot MP6510}{5\ [mm]}$$

where r = Tool radius [mm]
MP6510 = Maximum permissible measuring error

**Displaying the results of measuring**

With the STATUS TOOL PROBE soft key you can show the results of tool measurement in the additional status display (in the machine operating modes). Measured values that have exceeded the permissible wear tolerance are indicated with an asterisk (*).



Downloaded from www.Manualslib.com manuals search engine

## Calibrating the TT 110 touch probe

- Before calibrating the touch probe, you must enter the exact length and radius of the calibrating tool into the tool table TOOL.T.
- In addition, you must define the position of the TT 110 within the machine working space by setting the machine parameters MP 6580.0 to MP 6580.2 (see page 12-6).
- If you change one of the machine parameters 6580.0 to 6580.2, you must recalibrate the TT 110.

The TT 110 is calibrated automatically with the measuring cycle TCH PROBE 30. The TNC automatically finds the center offset of the calibration gauge. After the calibration cycle is half complete, the TNC rotates the spindle by 180°. Use an exactly cylindrical part, for example a cylindrical pin, as calibration gauge. The measured calibration values are stored in the TNC and automatically included in subsequent tool measurements.

**To program TCH PROBE 30.0:**

| | |
|---|---|
| TOUCH PROBE ▶ **TCH PROBE 0 REF. PLANE** | |
| GOTO □ 3 0 ENT | Select measuring cycle 30: CALIBRATE TT |
| **TCH PROBE 30 CALIBRATE TT** | |
| ENT | Confirm your selection. |
| **CLEARANCE HEIGHT ?** | |
| e.g. 9 0 ENT | Enter the position in the tool axis at which there is no danger of collision with the workpiece or fixtures. |

*Resulting NC blocks:*

```
TOOL CALL 1 Z
TCH PROBE 30.0 CALIBRATE TT
TCH PROBE 30.1 HEIGHT: +90
```



Downloaded from www.Manualslib.com manuals search engine

## Measuring the tool length

Before measuring a tool for the first time, you must enter the approximate radius, the approximate length, the number of teeth, and the cutting direction into tool table TOOL.T (see page 4-11).

The tool length is measured with the cycle TCH PROBE 31 TOOL LENGTH. Depending on the selected input parameters you can measure the length of a tool by one of the following methods:

- Measurement while the tool is rotating.
  This method can be used if the tool diameter is larger than the diameter of the measuring surface of the TT 110.
- Measurement while the tool is at standstill.
  This method can be used if the tool diameter is smaller than the diameter of the measuring surface of the TT 110. Used for drills or spherical cutters.
- Measurement of the individual teeth of the tool while it is at standstill.
  This method can be used if the tool diameter is larger than the diameter of the measuring surface of the TT 110.

### Measuring cycle for measuring a tool during rotation

The TNC determines the longest tooth of a rotating tool by positioning the tool to be measured at an offset to the center of the touch probe system and then moving it towards the measuring surface until it contacts the surface. The offset is programmed in the tool table (see page 4-12).

### Measuring cycle for measuring a tool during standstill (e.g. for drills)

The TNC positions the tool to be measured over the center of the measuring surface. It then moves the tool towards the measuring surface of the TT 110. For this measurement the **TOOL OFFSET: RADIUS (TT-R-OFFS)** in the tool table must be entered as 0.

### Measuring cycle for measuring single teeth

The TNC pre-positions the tool to be measured to a position at the side of the touch probe head. The distance from the tip of the tool to the upper edge of the touch probe head is defined in MP 6530. In the tool table you can define an additional offset under **TOOL OFFSET: LENGTH (TT-L-OFFS).** The tool is then probed radially during rotation to determine the starting angle for measuring the single teeth.

With the aid of oriented spindle stops, the TNC then measures the length of each tooth. To activate this function program TCH PROBE 31 = 1 for CUTTER MEASUREMENT.



Downloaded from www.Manualslib.com manuals search engine

**Input data**

- MEASURE TOOL=0 / CHECK TOOL=1
  Select whether the tool is to be measured for the first time or whether a tool that has already been measured is to be inspected. If the tool is being measured for the first time, the tool length L in the central tool file TOOL.T is overwritten by the delta value DL = 0. If you wish to inspect a tool, the TNC compares the measured length with the tool length L that is stored in TOOL.T. It then calculates the positive or negative deviation from the stored value and enters it into TOOL.T as the delta value DL. The deviation can also be used for Q parameter Q115 (see page 12-18). If the delta value is greater than the permissible tool length tolerance for wear or breakage, the TNC will lock the tool (status L in TOOL.T).
- CLEARANCE HEIGHT
  Position in the tool axis in which there is no danger of collision with the workpiece or fixtures.
- CUTTER MEASUREMENT 0=NO / 1=YES
  Here you can choose measurement of single teeth.

*NC program blocks for measuring a rotating tool for the first time:*

```
TOOL CALL 12 Z
TCH PROBE 31.0 TOOL LENGTH
TCH PROBE 31.1 CHECK: 0
TCH PROBE 31.2 HEIGHT: +120
TCH PROBE 31.3
  CUTTER MEASUREMENT: 0
```

*NC program blocks for inspecting single teeth:*

```
TOOL CALL 12 Z
TCH PROBE 31.0 TOOL LENGTH
TCH PROBE 31.1 CHECK: 1
TCH PROBE 31.2 HEIGHT: +120
TCH PROBE 31.3
  CUTTER MEASUREMENT: 1
```



Downloaded from www.Manualslib.com manuals search engine

## Measuring the tool radius

Before measuring a tool for the first time, you must enter the following data on the tool into tool table TOOL.T (see page 4-11): the approximate radius, the approximate length, the number of cutting edges and the cutting direction.

The tool radius is measured with the cycle TCH PROBE 32 TOOL RADIUS. Depending on the selected input parameters you can determine the radius of a tool by:

- Measuring the tool during rotation
- Measuring the tool during rotation and subsequently measuring the single cutting edges.

### Measuring cycle

The TNC pre-positions the tool to be measured at a position to side of the touch probe head. The distance from the tip of the milling tool to the upper edge of the touch probe head is defined in MP 6530. In the tool table you can define an additional offset under **TOOL OFFSET: LENGTH (TT: L-OFFS)** (if you want to measure a spherical cutter for example). The tool is then probed radially during rotation.
If you have programmed a subsequent measurement of the single cutting edges, the TNC measures the radius of each cutting edge with the aid of oriented spindle stops.

### Input data

- MEASURE TOOL=0 / CHECK TOOL=1
  Select whether a tool is to be measured for the first time or whether a tool that has already been measured is to be checked. If a tool is measured for the first time the tool radius R in the central tool file TOOL.T is overwritten by the delta value DR = 0. If you wish to check a tool, the TNC compares the measured radius with the tool radius R that is stored in TOOL.T. It then calculates the positive or negative deviation from the stored value and enters it into TOOL.T as the delta value DR. The deviation can also be used for Q parameter Q116 (see page 12-18). If the delta value is greater than the permissible tool radius tolerance for breakage or wear, the TNC will lock the tool (status L in TOOL.T).
- CLEARANCE HEIGHT
  Position in the tool axis in which there is no danger of collision with the workpiece or clamping devices.
- CUTTER MEASUREMENT 0=NO / 1=YES
  Determine whether or not the single cutting edges should be measured.

*NC program blocks for measuring a rotating tool for the first time:*

```
TOOL CALL 12 Z
TCH PROBE 32.0 TOOL RADIUS
TCH PROBE 32.1 CHECK: 0
TCH PROBE 32.2 HEIGHT: +120
TCH PROBE 32.3
  CUTTER MEASUREMENT: 0
```

*NC program blocks for checking single cutting edges:*

```
TOOL CALL 12 Z
TCH PROBE 32.0 TOOL RADIUS
TCH PROBE 32.1 CHECK: 1
TCH PROBE 32.2 HEIGHT: +120
TCH PROBE 32.3
  CUTTER MEASUREMENT: 1
```



Downloaded from www.Manualslib.com manuals search engine

The TNC features two interfaces for data transfer between the TNC and other units.

**Applications:**

- Blockwise transfer (DNC mode)
- Reading files into the TNC
- Transferring files from the TNC to external data storage
- Printing files
- Remote operation of the TNC

...and other applications

The two interfaces can be used simultaneously.

## 10.1 Menu for External Data Transfer

**To select external data transfer:**

| | |
|---|---|
| EXT | Menu for external data transfer appears on the screen. |

The TNC screen is divided vertically into two halves:

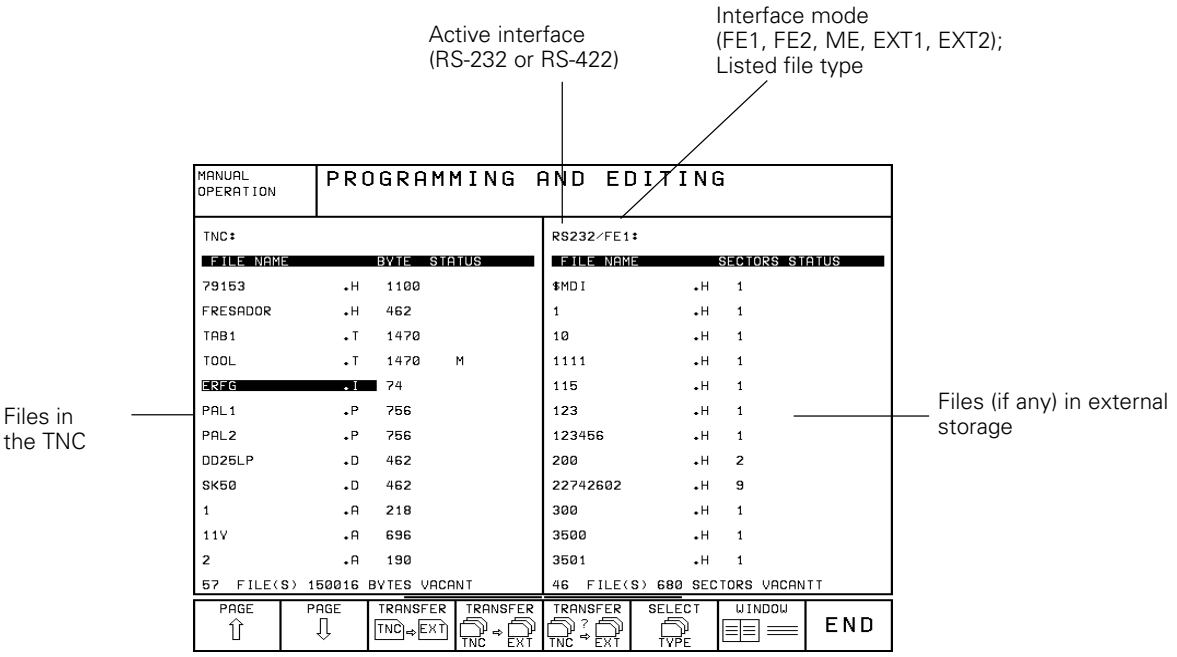


If you select the data transfer function from a tool table or pocket table, only the functions TRANSFER TNC⇨EXT and TRANSFER TNC⇦EXT are available.



Downloaded from www.Manualslib.com manuals search engine

## 10.2 Selecting and Transferring Files

The data transfer functions are provided in a soft-key row.

Soft-key row in the PROGRAMMING AND EDITING mode of operation:

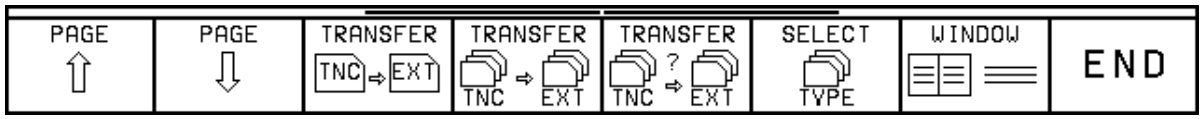


### Selecting a file

Use the arrow keys to select the desired file. The PAGE soft keys are for scrolling up and down in the file directory. The SELECT TYPE soft key has the same function as described earlier (see page 1-32).

### Transferring files

**Transferring files from the TNC to an external unit**

The highlight is on a file that is stored in the TNC.

| Function | Soft key |
|---|---|
| • Transfer selected file | TRANSFER TNC ⇨ EXT |
| • Transfer all files | TRANSFER TNC ⇨ EXT |
| • Select files consecutively for individual transfer. To transfer press ENT, otherwise NO ENT | TRANSFER TNC ? ⇨ EXT |

### Selecting the file type

Use the SELECT TYPE soft key to select other types of files.

### Select screen layout

Use the WINDOW soft key to select or deselect a split screen. The single screen mode can be selected both for TNC files and for externally stored files. If the highlight is at left, only TNC files are displayed. If the highlight is at right, only externally stored files are displayed.



Downloaded from www.Manualslib.com manuals search engine

**Transferring files from an external device to the TNC**

Use the cursor key to move the highlight to a file that is stored in the external device.

| Function | Key |
|---|---|
| • Transfer the selected file | TRANSFER TNC ⇦ EXT |
| • Transfer all files | TRANSFER TNC ⇦ EXT |
| • Select files consecutively for individual transfer. To transfer, press ENT, otherwise NO ENT | TRANSFER TNC ? ⇦ EXT |

**Interrupt transfer**

You can interrupt data transfer by pressing the END key or the END soft key.

- If the TNC recognizes erroneously transferred program blocks, it will mark them with ERROR =. These blocks must then be corrected in the PROGRAMMING AND EDITING mode.
- If you want to transfer files between two TNCs, start transmission from the receiving TNC.

## Blockwise transfer

The menu to the right is for blockwise transfer (see page 3-11). First select as usual the name of the file to be transferred blockwise. Then start data transfer with the SELECT soft key.

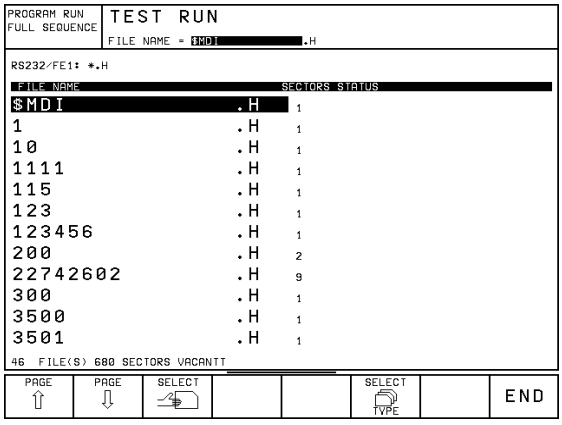


Fig. 10.1: Menu for blockwise transfer

When aborting blockwise transfer, you may have to reset the interface with the CLOSE RS-232-C soft key.



Downloaded from www.Manualslib.com manuals search engine

## 10.3 Pin Layout and Connecting Cable for the Data Interfaces

### RS-232-C/V.24 Interface

**HEIDENHAIN devices**

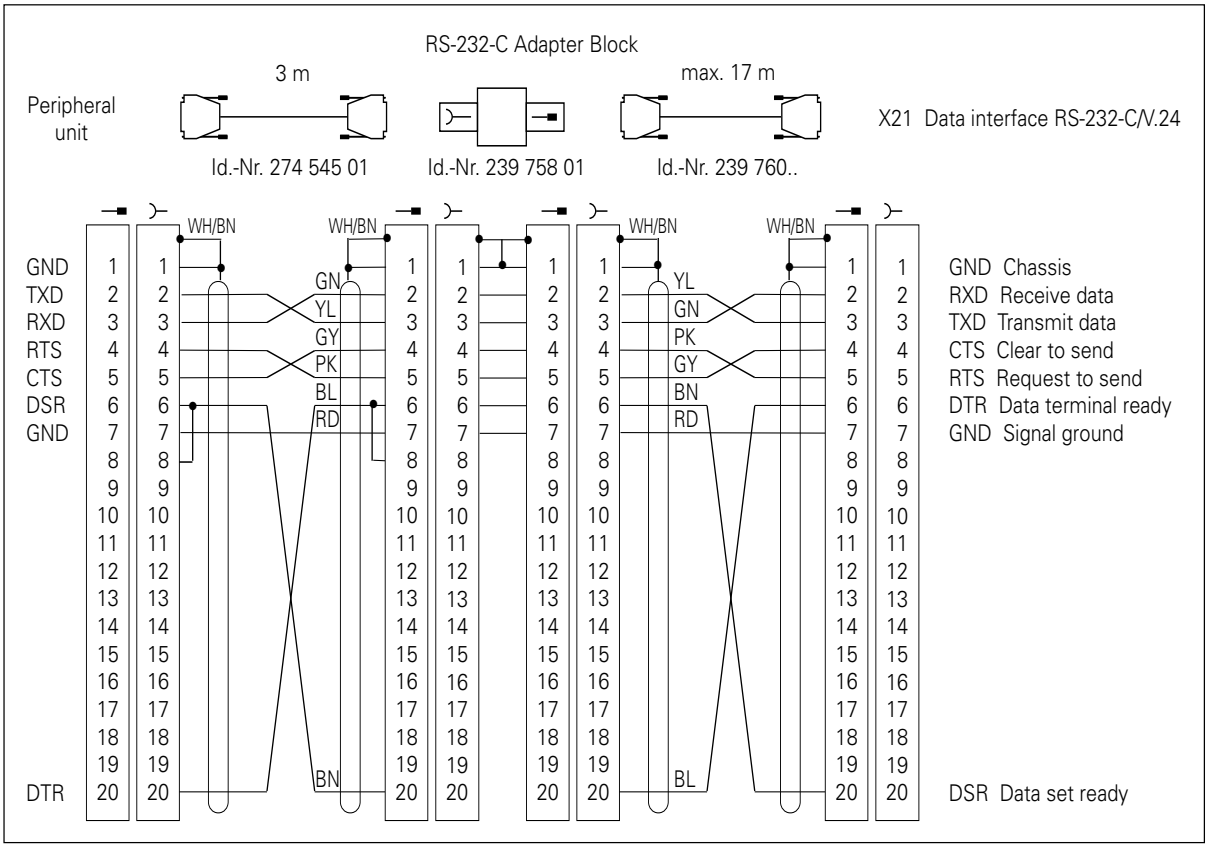


Fig. 10.2: Pin layout of the RS-232-C/V.24 interface for HEIDENHAIN devices

The connector pin layout on the adapter block differs from that on the TNC logic unit (X21).



Downloaded from www.Manualslib.com manuals search engine

### Non-HEIDENHAIN devices

The connector pin layout on a non-HEIDENHAIN device may be quite different from that on a HEIDENHAIN device. This depends on the unit and the type of data transfer. Fig. 10.3 shows the connector pin layout on the adapter block.

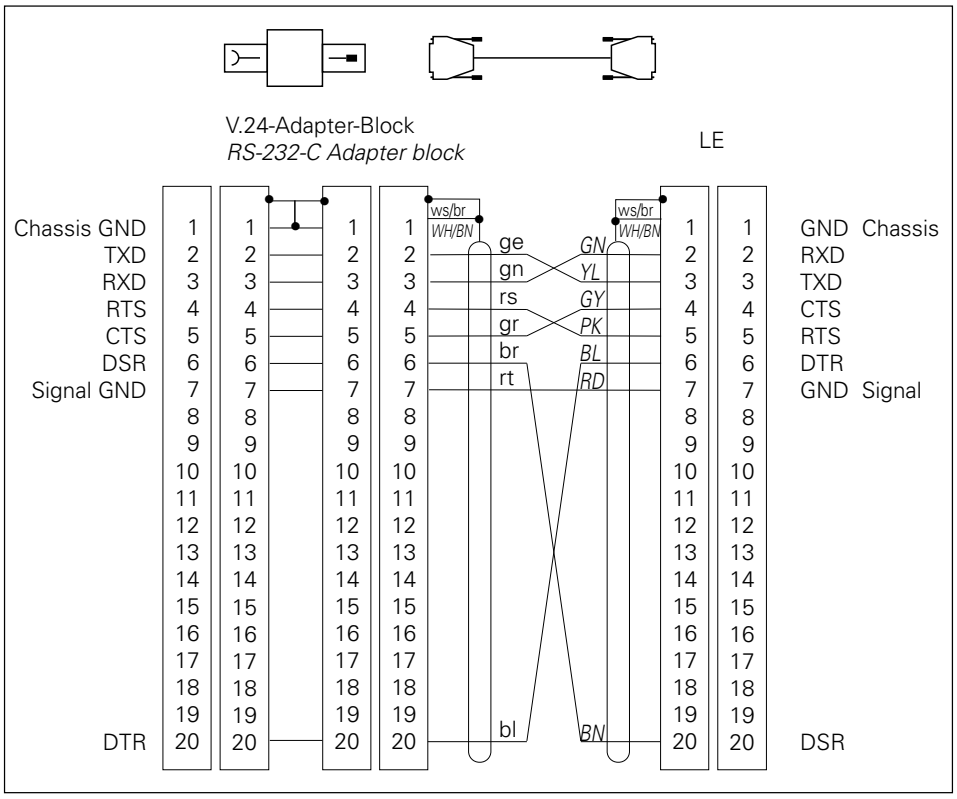


Fig. 10.3: Connecting a non-HEIDENHAIN device to the RS-232-C/V.24 interface



Downloaded from www.Manualslib.com manuals search engine

## RS-422/V.11 Interface

Only non-HEIDENHAIN devices are connected to the RS-422 interface.

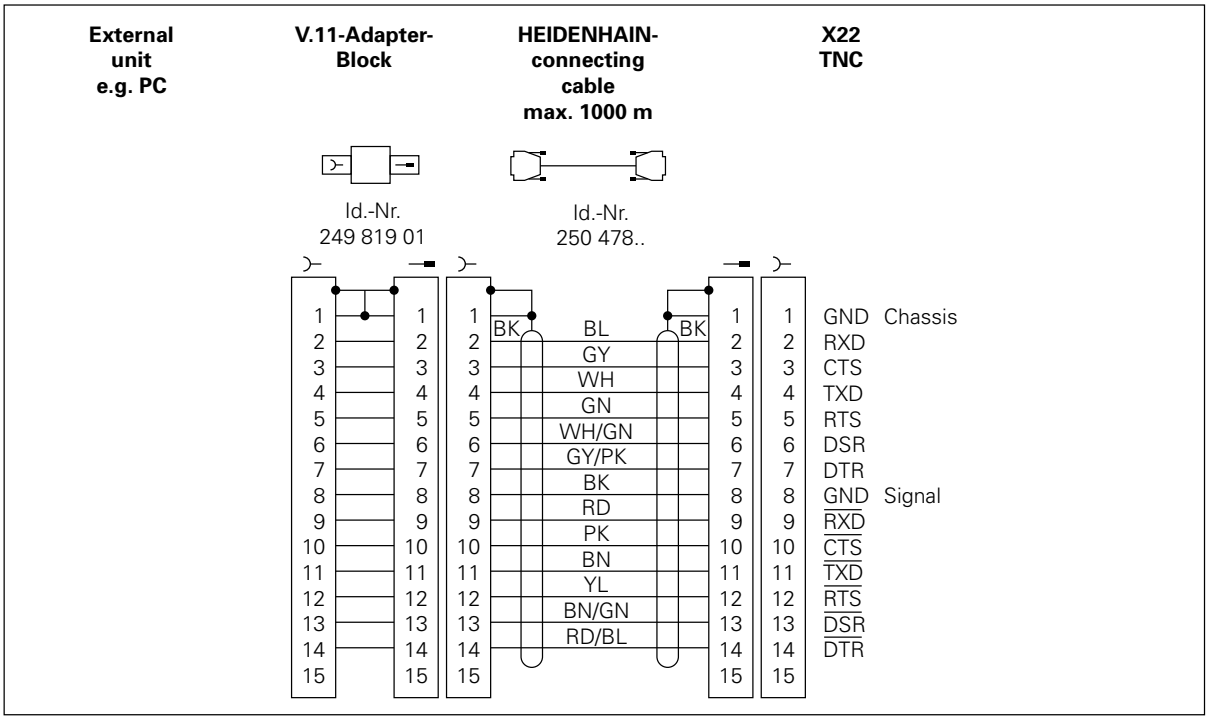


Fig. 10.4: Pin layout of the RS-422/V.11 interface

The pin layouts on the TNC logic unit (X22) and on the adapter block are identical.



Downloaded from www.Manualslib.com manuals search engine

## 10.4 Preparing the Devices for Data Transfer

### HEIDENHAIN devices

HEIDENHAIN devices (FE floppy disk unit and ME magnetic tape unit) are adapted to the TNC. They can be used for data transfer without further adjustments.

**Example: FE 401 floppy disk unit**

- Connect the power cable to the FE
- Connect the FE and TNC with the data transfer cable
- Switch on the FE
- Insert a floppy disk into the upper drive
- If necessary: format the disk
- Set the interface (see page 11-4)
- Transfer the data

- The memory capacity of a floppy disk is given in sectors.
- The baud rate can be selected at the FE 401 floppy disk unit.

### Non-HEIDENHAIN devices

The TNC and non-HEIDENHAIN devices must be adapted to each other.

**Adjusting a non-HEIDENHAIN DEVICE to the TNC**

- PC: Adapt the software
- Printer: Adjust the switches (DIP switches)

**Adjusting the TNC to a non-HEIDENHAIN device**

Set the user parameters:

- 5020.0 to 5210.0 for EXT1
- 5020.1 to 5210.1 for EXT2

The two settings can be adjusted, for example, to a PC (e.g. EXT1) or to a printer (EXT2).



Downloaded from www.Manualslib.com manuals search engine

The MOD functions provide additional displays and input possibilities. The available MOD functions depend on the selected operating mode.

Available functions and displays in the PROGRAMMING AND EDITING mode of operation:

- NC software number display
- PLC software number display
- Code number input
- Setting the data interface
- Machine-specific user parameters
- HELP files, if provided

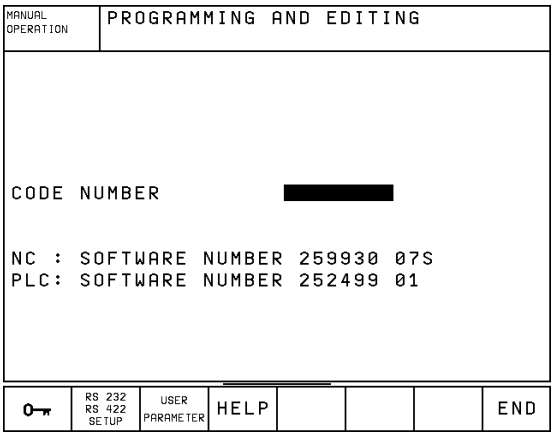


Fig. 11.1: MOD functions in the PROGRAMMING AND EDITING mode

In the TEST RUN mode of operation:

- NC software number display
- PLC software number display
- Code number entry
- Interface setup
- Graphic display of the workpiece blank in the working area of the machine
- Machine-specific user parameters
- HELP files, if provided

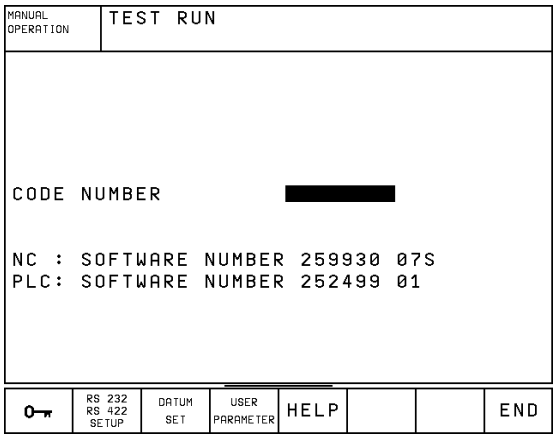


Fig. 11.2: MOD functions in the TEST RUN mode

In all other modes:

- NC software number display
- PLC software number display
- Display of code digits for installed options
- Position display selection
- Selecting the unit of measure (mm or inch)
- Selecting the programming language
- Select axes for actual position capture
- Setting limits of traverse
- Display of datums
- HELP files, if provided

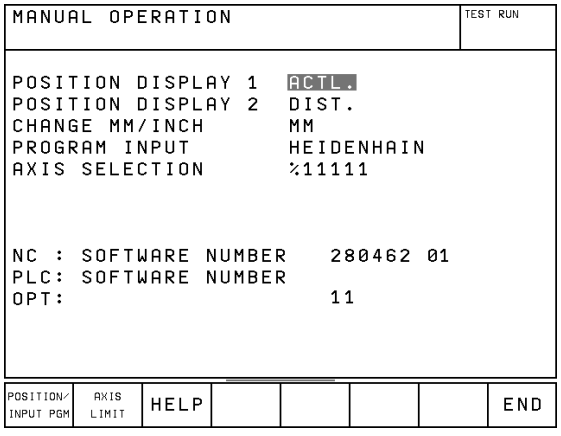


Fig. 11.3: MOD functions in a machine operating mode



Downloaded from www.Manualslib.com manuals search engine

## 11.1 Selecting, Changing and Exiting the MOD functions

**To select the MOD functions:**

| | |
|---|---|
| If necessary | Change to the desired mode of operation. |
| | Select MOD functions. |

**To change the MOD functions:**

Use the arrow keys to move the highlight to the desired MOD function.

| | |
|---|---|
| Repeatedly | Page through the MOD functions until you find the desired function. |
| e.g. | Enter the appropriate numbers and confirm entry with ENT. |

**To exit the MOD functions:**

| | |
|---|---|
| or | Close the MOD functions. |

## 11.2 Software Numbers and Option Numbers

The software numbers of the NC and PLC are displayed immediately in the MOD function opening screen. Directly below them are the code numbers for the installed options (OPT:).

- Digitizing option OPT: 1
- Digitizing and measuring touch probe options OPT: 11

## 11.3 Code Number

The TNC asks for a code number before it grants access to certain functions:

| Function | Code number |
|---|---|
| To cancel file erase and edit protection (status P) | 86357 |
| To select user parameters | 123 |



Downloaded from www.Manualslib.com manuals search engine

## 11.4 Setting the External Data Interfaces

Press the soft key marked RS 232- / RS 422 - SETUP to call a menu for setting the external data interfaces.

- MODE OF OP. - for the type of external storage device: FE1, FE2, ME, EXT1, EXT2, LSV2
- BAUD RATE - sets the data transfer speed at 110 to 38400 baud
- ASSIGN - Assigns either the RS-232 or the RS-422 interface to the modes
- PRINT - Outputs digitized data through RS-232, RS-422 or FILE

### Setting the RS-232 interface

The mode of operation and baud rates for the RS-232 interface are entered in the upper left of the screen.

### Setting the RS-422 interface

The mode of operation and baud rates for the RS-422 interface are entered in the upper right of the screen.

### Selecting the OPERATING MODE

| External device | OPERATING MODE |
|---|---|
| HEIDENHAIN floppy disk units<br>• FE 401 B<br>• FE 401 from program number 230 626 03 | <br>FE 1<br>FE 1 |
| HEIDENHAIN FE 401 floppy disk unit up to program number 230 626 02<br><br>PC with HEIDENHAIN data transfer software TNC.EXE | FE 2<br><br>FE 2 |
| HEIDENHAIN ME 101 magnetic tape unit (no longer in production) | ME |
| Non-HEIDENHAIN units such as a printers, tape punchers, PCs without TNC.EXE | EXT 1<br>EXT 2 |
| PC with HEIDENHAIN software TNC REMOTE for remote operation of the TNC | LSV 2 |

The HEIDENHAIN ME 101 magnetic tape unit (ME mode of operation) can only be used in the TNC mode of operation PROGRAMMING AND EDITING.



Downloaded from www.Manualslib.com manuals search engine

## Downward compatibility

For programs that are transferred through the external data interface, the resolution of the numerical data can be set to 0.1 µm or 1 µm.

The 1 µm setting transfers the data with only 3 places after the decimal point in the metric system (4 places in the inch system).

This feature ensures the downward compatibility of the TNC 425 to earlier software versions and other TNCs.

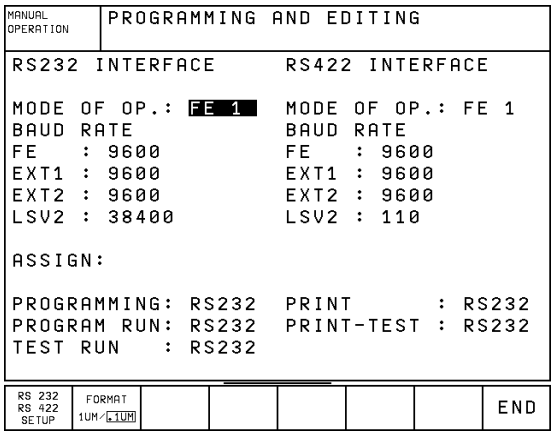


Fig. 11.4: The FORMAT 1 µm / 0.1 µm soft key ensures downward compatibility

### Input

To select the accuracy of the transferred data, go to the PROGRAMMING AND EDITING mode of operation:

| | |
|---|---|
| EXT | Call the data transfer menu. |
| MOD | Select the MOD functions. |
| FORMAT 1UM/.1UM | Set accuracy to 1 µm/0.1 µm. |
| END | Leave the MOD functions. |
| e.g. TRANSFER TNC ⇨ EXT | Transfer the program. |

## Setting the baud rate

The baud rate (data transfer speed) is selectable between 110 and 38400 baud.

- The baud rate of the ME 101 is 2400 baud.
- You cannot transfer through an interface with 19200 baud and another interface with 38 400 baud at the same time.

## ASSIGN

This function determines which interface (RS-232 or RS-422) is used for external data transfer in the listed TNC modes of operation.



Downloaded from www.Manualslib.com manuals search engine

## PRINT and PRINT-TEST

The PRINT and PRINT-TEST functions set the destination for the transferred data.

Applications:
- Transferring values with the Q parameter function FN15
- Transferring digitized surface data

The TNC mode of operation determines whether the PRINT or PRINT-TEST function is used:

| TNC mode of operation | Transfer function |
|---|---|
| PROGRAM RUN, SINGLE BLOCK | PRINT |
| PROGRAM RUN, FULL SEQUENCE | PRINT |
| TEST RUN | PRINT-TEST |

PRINT and PRINT-TEST can be set as follows:

| Function | Setting |
|---|---|
| Transfer data via RS-232 | RS-232 |
| Transfer data via RS-422 | RS-422 |
| Save data to a file in the TNC | FILE |
| Do not save data | (vacant) |

**Files in the TNC (FILE setting)**

| Data | Mode of operation | File name |
|---|---|---|
| Digitized data | PROGRAM RUN | Set as in the RANGE cycle |
| Values with FN15 | PROGRAM RUN | % FN15RUN.A |
| Values with FN15 | TEST RUN | %FN15SIM.A |

To change a setting, type it into the highlight and confirm by pressing ENT.



Downloaded from www.Manualslib.com manuals search engine

## 11.5 Machine-Specific User Parameters

The machine tool builder can assign functions to up to 16 user parameters. You will find more detailed information on user parameters in your machine operating manual.

## 11.6 Showing the Workpiece in the Working Space

The DATUM SET soft key enables you to graphically check the position of the workpiece blank in the machine's working space and to activate the work space monitoring in the TEST RUN mode of operation.

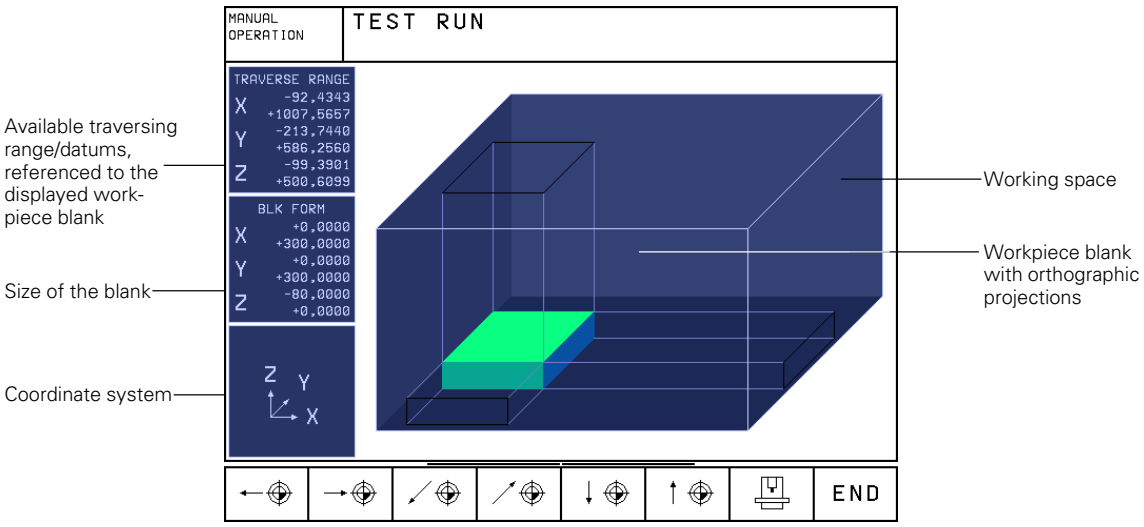




Downloaded from www.Manualslib.com manuals search engine

## Overview of functions

| Function | Soft key |
|---|---|
| Move workpiece blank to the left or right (graphically) | 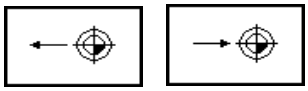 |
| Move the workpiece blank forward or backward (graphically) | 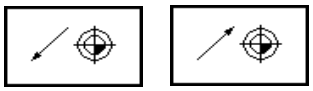 |
| Move the workpiece blank downward or upward (graphically) | 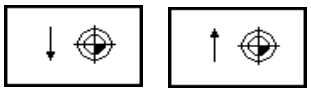 |
| Show workpiece blank referenced to the set datum | 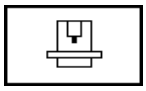 |
| Shift the soft-key row | 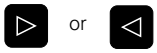 or  |
| Show the entire traversing range referenced to the workpiece blank | 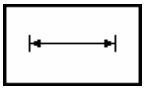 |
| Show the machine datum in the working space | 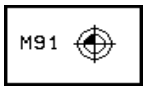 |
| Show a position determined by the machine tool builder (e.g. tool change position) in the working space | 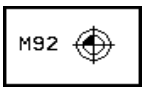 |
| Show the workpiece datum in the working space | 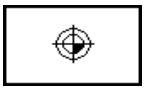 |
| Disable (OFF) or enable (ON) work space monitoring during test run | 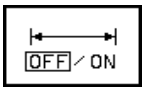 |



Downloaded from www.Manualslib.com manuals search engine

## 11.7 Selecting Position Display Types

The positions indicated in Fig. 11.4 are:

- Starting position Ⓐ
- Target position of the tool Ⓩ
- Workpiece datum Ⓦ
- Machine datum Ⓜ

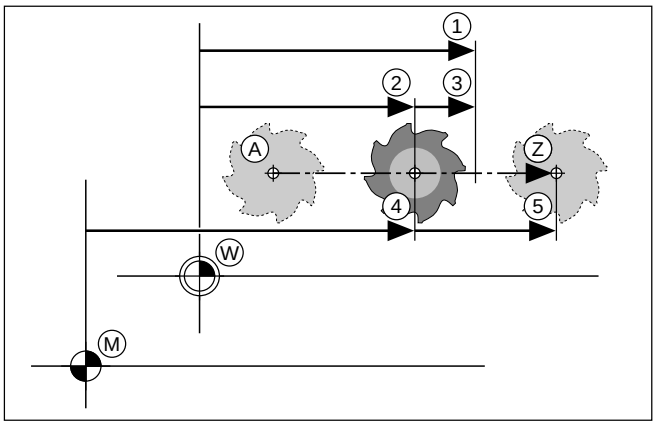


Fig. 11.6: Characteristic positions on the workpiece and scale

The TNC position display can show the following types of information:

- Nominal position: the value presently commanded by the TNC ① ..... NOML.
- Actual position: the position at which the tool is presently located ② ..... ACTL.
- Servo lag: the difference between nominal and actual positions ③ ..... LAG
- Reference position: the actual position as referenced to the machine datum ④ ..... REF
- Distance remaining to the programmed position: the difference between actual and target positions ⑤ ..... DIST.
- Deflection of the TM 110 measuring touch probe system ..... DEFL.

The POSITION DISPLAY mod function (see Fig. 11.6) permits different types of position information for the status display and the additional status display:

- The upper selection determines the position display in the status display.
- The lower selection determines the position display in the additional status display.



Downloaded from www.Manualslib.com manuals search engine

## 11.8 Selecting the Unit of Measure

This MOD function determines whether coordinates are displayed in millimeters (metric system) or inches.

- To select the metric unit system (e.g., X = 15.789 mm), set the CHANGE MM/INCH function to MM.
  The value is displayed with 3 digits after the decimal point.
- To select the inch system (e.g., X = 0.6216 inch), set the CHANGE MM/INCH function to INCH.
  The value is displayed with 4 digits after the decimal point.

## 11.9 Selecting the Programming Language for $MDI

The PROGRAM INPUT mod function lets you decide whether to program the $MDI file in HEIDENHAIN conversational dialog or in G-codes according to ISO.

- To program the $MDI.H file in conversational dialog, set the PROGRAM INPUT function to HEIDENHAIN.
- To program the $MDI.I file according to ISO, set the PROGRAM INPUT function to ISO.

## 11.10 Selecting the Axes for Generating L Blocks

The AXIS SELECTION input field enables you to define the current tool position coordinates that are transferred to an L block. To generate a separate L block, press the ACTUAL POSITION CAPTURE soft key (see page 4-30). On the TNC 407, up to 3 coordinates can be transferred; on the TNC 415 B and TNC 425 controls, you can transfer up to 5 coordinates. The axes are selected by bit-oriented definition, similar to programming the machine parameters.

| | | |
|---|---|---|
| AXIS SELECTION | %11111 | Transfer the X, Y, Z, IV, and V axes |
| AXIS SELECTION | %01111 | Transfer the X, Y, Z, and IV axes |
| AXIS SELECTION | %00111 | Transfer the X, Y, and Z axes |
| AXIS SELECTION | %00011 | Transfer the X and Y axes |
| AXIS SELECTION | %00001 | Transfer the X axis |



Downloaded from www.Manualslib.com manuals search engine

## 11.11 Setting Limits to Axis Traverse, Datum Display

The AXIS LIMIT mod function allows you to set limits to axis traverse within the machine's actual working envelope.

Possible application:
to protect an indexing fixture against tool collision.

The maximum range of traverse of the machine tool is defined by software limit switch. This range can be additionally limited through the AXIS LIMIT mod function. With this function you can enter the maximum and minimum traverse positions for each axis, referenced to the machine datum.

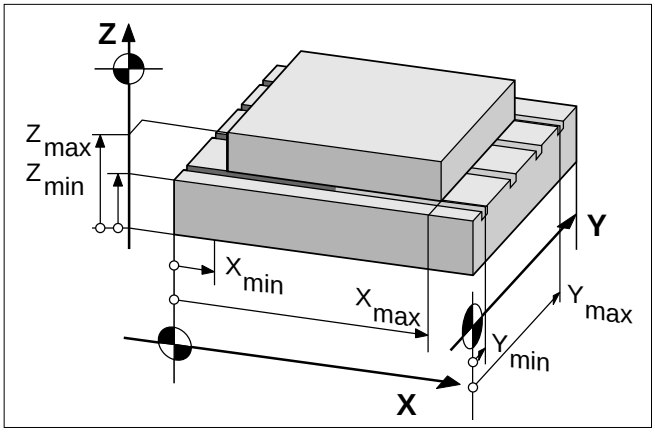


Fig. 11.7: Orienting traverse limits to the workpiece

**Working without additional traverse limits**

To allow a machine axis to use its full range of traverse in a certain axis, enter the maximum traverse of the TNC (+/- 99 999 mm) as AXIS LIMIT.

**To find and enter the maximum traverse**

| | |
|---|---|
| Set the POSITION DISPLAY mod function to REF. | |
| Move the spindle to the positive and negative end positions of the X, Y and Z axes. | |
| Write down the values, including the algebraic sign. | |
| MOD | Select the MOD functions. |
| AXIS LIMIT | Enter the values that you wrote down as LIMITS in the corresponding axes. |
| END | Exit the MOD functions. |

- The tool radius is not automatically compensated in the axis traverse limit values.
- The traverse range limits and software limit switches become active as soon as the reference points are passed over.

**Datum display**

The values shown at the lower left are the manually set datums referenced to the machine datum. They cannot be changed in the menu.



Downloaded from www.Manualslib.com manuals search engine

## 11.12 Calling HELP files

Help files are a way to find information quickly that you would otherwise have to search for in a manual. Help files can aid you in situations in which you need clear instructions before proceeding in your work, for example to retract the tool after an interruption in power. The miscellaneous functions may also be explained in a help file. Help files are not provided on every machine. Your machine tool builder can provide you with further information on this feature.

**To call help files:**

| | |
|---|---|
| MOD | Select the MOD functions. |
| HELP | Call the last active HELP file. |
| If desired PGM NAME | Call other HELP files. |

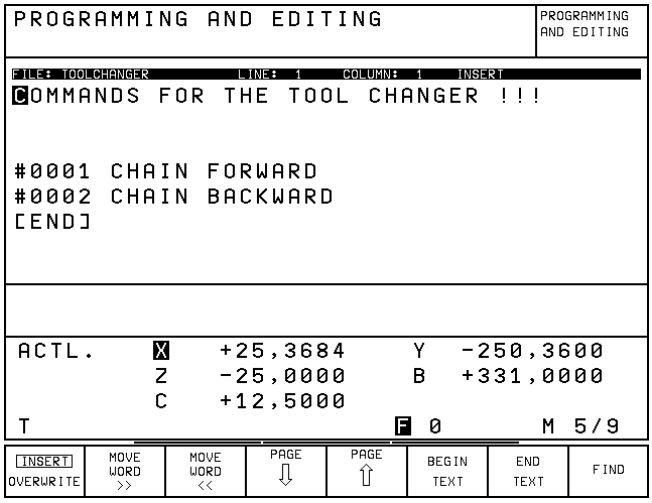


Fig. 11.8: HELP file in a machine operating mode



Downloaded from www.Manualslib.com manuals search engine

# 12.1 General User Parameters

General user parameters are machine parameters affecting TNC settings that the user may want to change to adapt to his needs. Some examples of user parameters are:

- Dialog language
- Interface behavior
- Traversing speeds
- Sequence of machining
- Effect of the overrides

## Input possibilities for machine parameters

Machine parameters can be programmed as

- Decimal numbers:
  Simply enter the numbers
- Pure binary numbers:
  Enter a % (percent sign) before the number
- Hexadecimal numbers:
  Enter a $ (dollar sign) before the number

**Example:**
Instead of the decimal number 27, you can enter the binary number % 11011 or the hexadecimal number $1B.

The individual machine parameters can be entered in the different numerical systems.

Some machine parameters have more than one function. The input value of such parameters is the sum of the individual values. For these machine parameters the individual values are preceded by a plus sign (**+**).

## Selecting general user parameters

General users parameters are selected with the code number 123 in the MOD functions.

The MOD functions also include machine specific user parameters (USER PARAMETERS).



Downloaded from www.Manualslib.com manuals search engine

## External data transfer

**Adapt TNC interfaces EXT1 (5020.0) and EXT2 (5020.1) to external device**

***MP5020.x*** 7 data bits (ASCII code, 8th bit = parity): ***+0***
8 data bits (ASCII code, 9th bit = parity): ***+1***

Block check character (BCC) any: ***+0***
Block check character (BCC) control character not allowed: ***+2***

Transmission stop through RTS active: ***+4***
Transmission stop through RTS not active: ***+0***

Transmission stop through DC3 active: ***+8***
Transmission stop through DC3 not active: ***+0***

Character parity even: ***+0***
Character parity odd: ***+16***

Character parity not desired: ***+0***
Character parity desired: ***+32***

$1^1/_2$ stop bits: ***+0***
2 stop bits: ***+64***
1 stop bits: ***+128***
1 stop bits: ***+192***

**Example:**
Adapt TNC interface EXT2 (MP 5020.1) to external non-HEIDENHAIN device with the following setting:
8 data bits, any BCC, transmission stop through DC3,
even character parity, character parity desired, 2 stop bits
Input value: 1+0+8+0+32+64 = 105 (input value for MP 5020.1)

**Interface type for EXT1 (5030.0) and EXT2 (5030.1)**

***MP5030.x*** Standard transfer: ***0***
Interface for blockwise transfer: ***1***

**Data transfer over EXT1 (xxxx.0) and EXT2 (xxxx.1)**

| | | |
|---|---|---|
| ***MP5200.x*** | Start of text STX: | ***Decimal value for ASCII character (0 to 127)*** |
| ***MP5201.x*** | End of text ETX | |
| ***MP5202.x*** | Data input (1st character) H | |
| ***MP5203.x*** | Data input (2nd character) E | |
| ***MP5204.x*** | Data output (1st character) H | |
| ***MP5205.x*** | Data output (2nd character) A | |
| ***MP5206.x*** | Start of header SOH | |
| ***MP5207.x*** | End of transmission block ETB | |
| ***MP5208.x*** | Positive acknowledgement ACK | |
| ***MP5209.x*** | Negative acknowledgement NAK | |
| ***MP5210.x*** | End of transmission EOT | |



Downloaded from www.Manualslib.com manuals search engine

| 3D touch probes and digitizing |
|---|
| **Type of touch probe**<br>***MP6200*** Triggering touch probe: ***0***<br>Measuring touch probe: ***1*** |
| **Type of transmission**<br>***MP6010*** Cable transmission: ***0***<br>Infrared transmission: ***1*** |
| **Probe feed rate for TS 120/TS 511**<br>***MP6120*** ***80 to 3000 [mm/min]*** |
| **Maximum traverse to first probe point**<br>***MP6130*** ***0 to 99 999.9999 [mm]*** |
| **Safety clearance to probe point during automatic measurement**<br>***MP6140*** ***0 to 99 999.9999 [mm]*** |
| **Rapid traverse for probing with TS 120/TS 511**<br>***MP6150*** ***1 to 300 000 [mm/min]*** |
| **Measure center misalignment of stylus for calibration of TT 120/TS 511**<br>***MP6160*** No 180° rotation of 3D touch probe during calibration: ***0***<br>M function for 180° rotation of touch probe during calibration: ***1 to 88*** |
| **Lubrication of touch probe axis during digitizing with TS 120**<br>***MP6220*** Traverse in the touch probe axis at end of line: ***0 to 99 999.9999 [mm]*** |
| **Lubrication of touch probe axis during digitizing with TS 120**<br>***MP6221*** Lubricate after: ***0 to 65 535 [sec]*** |



Downloaded from www.Manualslib.com manuals search engine

## 3D touch probes and digitizing

***MP6300*** **Reserved**

**Infeed of TM measuring touch probe stylus**

***MP6310*** ***0.1 to 2.0000 [mm]*** (recommended: 1 mm)

**Measure center misalignment during calibration of measuring touch probe**

***MP6321*** Measure center misalignment: ***0***
Do not measure center misalignment: ***1***

**Assignment of touch probe axis to machine axis for measuring touch probe**

The touch probe axes must be correctly assigned to the machine axes, otherwise there is danger of stylus breakage.

***MP6322.0*** Machine axis X is parallel to
Touch probe axis X: ***0***
Touch probe axis Y: ***1***
Touch probe axis Z: ***2***

***MP6322.1*** Machine axis Y is parallel to
Touch probe axis X: ***0***
Touch probe axis Y: ***1***
Touch probe axis Z: ***2***

***MP6322.2*** Machine axis Z is parallel to
Touch probe axis X: ***0***
Touch probe axis Y: ***1***
Touch probe axis Z: ***2***

**Maximum stylus deflection for measuring touch probe**

***MP6330*** ***0.1 to 4.0000 [mm]***

**Feed rate for positioning of measuring touch probe to MIN point and moving to the contour**

***MP6350*** ***10 to 3000 [mm/min]***

**Probe feed rate for measuring touch probe**

***MP6360*** ***10 to 3000 [mm/min]***

**Rapid traverse in probing cycle for measuring touch probe**

***MP6361*** ***10 to 3000 [mm/min]***

**Feed rate reduction if stylus of measuring touch probe is deflected laterally**

The TNC reduces the feed rate according to a preset characteristic. The minimum feed rate is 10% of the programmed digitizing feed rate.

***MP6362*** Feed rate reduction not active: ***0***
Feed rate reduction active: ***1***

**Target window for digitizing in contour lines with measuring touch probe**

With contour line digitizing, the end points of the individual contour lines are not exactly the same as the starting points. With machine parameter MP 6390 you can define a square target window within which the end point must lie after the touch probe has orbited the model. The input value is half the side length of the target window.

***MP6390*** ***0.1 to 4.0000 [mm]***



Downloaded from www.Manualslib.com manuals search engine

## 3D touch probes and digitizing

**Probing direction for measuring the radius with TT 110**

***MP6505*** Positive probing direction in the angle reference axis (0° axis): ***0***
Positive probing direction in the +90° axis: ***1***
Negative probing direction in the angle reference axis (0° axis): ***2***
Negative probing direction in the +90° axis: ***3***

**Probe feed rate for second measurement with TT 110, stylus shape, corrections in TOOL.T**

***MP6507*** Calculate probe feed rate for second measurement w/ TT 110, with constant tolerance: ***+0***
Calculate probe feed rate for second measurement w/ TT 110, with variable tolerance: ***+1***
Constant probe feed rate for second measurement with TT 110: ***+2***

TT 110 with cylindrical stylus: ***+0***
TT 110 with cubic stylus: ***+64***

Automatically send measuring results to TOOL.T: ***+0***
Do not correct TOOL.T: ***+128***

**Maximum permissible error when measuring rotating tool with TT 110**

Required for calculation of the probe feed rate in connection with MP6570.

***MP6510*** ***0.001 to 0.999 [mm]*** (recommended: 0.005 mm)

**Probe feed rate for TT 110 for stationary tool**

***MP6520*** ***10 to 3000 [mm/min]***

**Radius measurement with TT 110: Distance from lower edge of tool to upper edge of stylus**

The entered value is added to the value entered under TT: L-OFFS in the tool table

***MP6530*** ***0.0001 to 9999.9999 [mm]***

**Clearance zone around TT 110 for pre-positioning**

***MP6540*** ***0.0001 to 9999.9999 [mm]***

**Rapid traverse for TT 110 in probe cycle**

***MP6550*** ***10 to 10 000 [mm/min]***

**M function for spindle orientation when measuring single cutting edges with TT 110**

***MP6560*** ***0 to 88***

**Permissible rotational speed at circumference of milling tool when measuring rotating tools**

***MP6570*** ***40.000 to 120.0000 [m/min]***

**REF coordinates of stylus center of TT 110**

***MP6580.0*** X axis: ***–99 999.9999 to 99 999.9999 [mm]***
***MP6580.1*** Y axis: ***–99 999.9999 to 99 999.9999 [mm]***
***MP6580.2*** Z axis: ***–99 999.9999 to 99 999.9999 [mm]***



Downloaded from www.Manualslib.com manuals search engine

## TNC displays, TNC editor

**Programming station**

***MP7210*** TNC with machine: ***0***
TNC as programming station with active PLC: ***1***
TNC as programming station with inactive PLC: ***2***

**Acknowledgement of POWER INTERRUPTED message**

***MP7212*** Acknowledge with key: ***0***
Automatic acknowledgment: ***1***

**Block number increment for ISO programming**

***MP7220*** ***0 to 150***

**Maximum length of file names**

***MP7222*** 8 characters: ***0***
12 characters: ***1***
16 characters: ***2***

**Inhibit file management for certain file types**

If you inhibit the file types of existing files, those files will be deleted!

***MP7224.0*** No files inhibited: ***+0***
Inhibit HEIDENHAIN programs: +1
Inhibit ISO programs: ***+2***
Inhibit tool tables: ***+4***
Inhibit datum tables: ***+8***
Inhibit pallet tables: ***+16***
Inhibit text files: ***+32***
Inhibit PNT table***: +128***

**Inhibit editor for certain file types**

***MP7224.1*** Do not inhibit editor: ***+0***
Inhibit editor for HEIDENHAIN programs: ***+1***
Inhibit editor for ISO programs: ***+2***
Inhibit editor for tool tables: ***+4***
Inhibit editor for datum tables: ***+8***
Inhibit editor for pallet tables: ***+16***
Inhibit editor for text files: ***+32***
Inhibit editor for PNT table***: +128***



Downloaded from www.Manualslib.com manuals search engine

## TNC displays, TNC editor

**Configuration of pallet files**

***MP7226.0*** Pallet files not active: ***0***
Number of pallets per pallet file: ***1 to 255***

**Configuration of datum tables**

***MP7226.1*** Datum tables not active: ***0***
Number of datums per datum table: ***1 to 255***

**Dialog language**

***MP7230*** German: ***0***
English: ***1***

**Protect OEM cycles in TNC program memory**

***MP7240*** Protect OEM programs: ***0***
Do not protect OEM programs: ***1***

**Configuration of tool tables**

***MP7260*** Not active: ***0***
Number of tools per tool table: ***1 to 254***

**Configuration of tool pocket tables**

***MP7261*** Not active: ***0***
Number of pockets per pocket table: ***1 to 254***

**Configuration of tool tables; column number in the tool table for (do not execute: 0)**

***MP7266.0*** Tool name — NAME: ***0 to 24***
***MP7266.1*** Tool length — L: ***0 to 24***
***MP7266.2*** Tool radius — R: ***0 to 24***
***MP7266.3*** Tool radius — R2: ***0 to 24***
***MP7266.4*** Oversize length — DL: ***0 to 24***
***MP7266.5*** Oversize radius — DR: ***0 to 24***
***MP7266.6*** Oversize radius2 — DR2: ***0 to 24***
***MP7266.7*** Tool locked — TL: ***0 to 24***
***MP7266.8*** Replacement tool — RT: ***0 to 24***
***MP7266.9*** Maximum tool life — TIME1: ***0 to 24***
***MP7266.10*** Max. tool life with TOOL CALL — TIME2: ***0 to 24***
***MP7266.11*** Current in-service time — CUR. TIME: ***0 to 24***
***MP7266.12*** Comment — DOC: ***0 to 24***
***MP7266.13*** Number of teeth — CUT.: ***0 to 24***
***MP7266.14*** Tolerance for wear in tool length — LTOL: ***0 to 24***
***MP7266.15*** Tolerance for wear tool radius — RTOL: ***0 to 24***
***MP7266.16*** Cutting direction — DIRECT.: ***0 to 24***
***MP7266.17*** PLC status — PLC: ***0 to 24***
***MP7266.18*** Offset of the tool in the tool axis additional to MP6530 — TT:L-OFFS: ***0 to 24***
***MP7266.19*** Tool offset from stylus center — TT:R-OFFS: ***0 to 24***
***MP7266.20*** Tolerance for breakage in tool length — LBREAK.: ***0 to 24***
***MP7266.21*** Tolerance for breakage in tool radius— RBREAK: ***0 to 24***



Downloaded from www.Manualslib.com manuals search engine

## TNC displays, TNC editor

**Configuration of tool pocket table; column number in the tool table for (do not execute: 0)**

***MP7267.0*** Tool number – T: ***0 to 5***

***MP7267.1*** Special tool – ST: ***0 to 5***

***MP7267.2*** Fixed pocket – F: ***0 to 5***

***MP7267.3*** Pocket locked – L: ***0 to 5***

***MP7267.4*** PLC – Status – PLC: ***0 to 5***

**MANUAL OPERATION: Display of feed rate**

**MP7270** Display feed rate F only if a machine axis direction button depressed: ***0***
Display feed rate F even if no machine axis direction button depressed (feed rate of "slowest" axis): ***1***

**Decimal character**

***MP7280*** Comma: ***0***
Point: ***1***

**Position display in the tool axis**

***MP7285*** Display referenced to tool datum: ***0***
Display referenced to tool face: ***1***

**Display step for the X axis**

***MP7290.0*** 0.1 mm: ***0***
0.05 mm: ***1***
0.01 mm: ***2***
0.005 mm: ***3***
0.001 mm: ***4***
0.0005 mm: ***5***
0.0001 mm: ***6***

**Display step for the Y axis**

***MP7290.1*** 0.1 mm: ***0***
0.05 mm: ***1***
0.01 mm: ***2***
0.005 mm: ***3***
0.001 mm: ***4***
0.0005 mm: ***5***
0.0001 mm: ***6***

**Display step for the Z axis**

***MP7290.2*** 0.1 mm: ***0***
0.05 mm: ***1***
0.01 mm: ***2***
0.005 mm: ***3***
0.001 mm: ***4***
0.0005 mm: ***5***
0.0001 mm: ***6***



Downloaded from www.Manualslib.com manuals search engine

## TNC displays, TNC editor

**Display step for axis IV**

***MP7290.3*** 0.1 mm: ***0***
0.05 mm: ***1***
0.01 mm: ***2***
0.005 mm: ***3***
0.001 mm: ***4***
0.0005 mm: ***5***
0.0001 mm: ***6***

**Display step for axis V**

***MP7290.3*** 0.1 mm: ***0***
0.05 mm: ***1***
0.01 mm: ***2***
0.005 mm: ***3***
0.001 mm: ***4***
0.0005 mm: ***5***
0.0001 mm: ***6***

**Inhibit datum setting**

***MP7295*** Do not inhibit datum setting: ***+0***
Inhibit datum setting in the X axis: ***+1***
Inhibit datum setting in the Y axis: ***+2***
Inhibit datum setting in the Z axis: ***+4***
Inhibit datum setting in axis IV: ***+8***
Inhibit datum setting in axis V: ***+16***

**Inhibit datum setting with orange axis keys**

***MP7296*** Do not inhibit datum setting: ***0***
Inhibit datum setting with orange axis keys: ***1***

**Reset status display, Q parameters and tool data**

***MP7300*** Reset everything when a program is selected: ***0***
Reset everything when a program is selected and with M02, M30, END PGM: ***1***
Only reset status display and tool data when a program is selected: ***2***
Only reset status display and tool data when a program is selected
and with M02, M30, END PGM: ***3***
Reset status display and Q parameters when a program is selected: ***4***
Reset status display and Q parameters when a program is selected
and with M02, M30, END PGM: ***5***
Reset status display when a program is selected: ***6***
Reset status display when a program is selected
and with M02, M30, END PGM: ***7***

**Graphic display mode**

***MP7310*** Projection in three planes according to ISO 6433, projection method 1: ***+0***
Projection in three planes according to ISO 6433, projection method 2: ***+1***

Do not rotate coordinate system for graphic display: ***+0***
Rotate coordinate system for graphic display by 90°: ***+2***

Display new BLK FORM with cycle 7 DATUM SHIFT referenced to old datum: ***+0***
Display new BLK FORM with cycle 7 DATUM SHIFT referenced to new datum: ***+4***

Do not display cursor position during projection in three planes: ***+0***
Display cursor position during projection in three planes: ***+8***



Downloaded from www.Manualslib.com manuals search engine

| TNC displays, TNC editor |
|---|
| **Graphic simulation without programmed tool axis: Tool radius**<br>***MP7315*** ***0 to 99 999.9999 [mm]*** |
| **Graphic simulation without programmed tool axis: Penetration depth**<br>***MP7316*** ***0 to 99 999.9999 [mm]*** |
| **Graphic simulation without programmed tool axis: M function for start**<br>***MP7317.0*** ***0 to 88*** (0: function inactive) |
| **Graphic simulation without programmed tool axis: M function for end**<br>***MP7317.1*** ***0 to 88*** (0: function inactive) |
| **Size of program memory for blockwise transfer**<br>***MP7228.0*** Minimum memory to be used: ***1 to 1024 [kilobytes]***<br>***MP7228.1*** Maximum memory to be used: ***1 to 1024 [kilobytes]*** |
| **Effect of cycle 11 SCALING FACTOR**<br>***MP7410*** Scaling factor effective in 3 axes: ***0***<br>Scaling factor effective only in working plane: ***1*** |
| **Tool compensation data in probe cycle TOUCH PROBE 0**<br>***MP7411*** Current tool data are overwritten by calibrated data from 3D touch probe: ***0***<br>Current tool data are retained: ***1*** |



Downloaded from www.Manualslib.com manuals search engine

## Machining and program run

**Cycle 17: Oriented spindle stop at beginning of cycle**

***MP7160*** Perform spindle orientation: ***0***
Do not perform spindle orientation: ***1***

**Cycle 6 ROUGH-OUT: Define behavior**

***MP7420*** Mill channel around contour in clockwise direction for islands and counterclockwise direction for pockets: ***+0***

Mill channel around contour in clockwise direction for pockets and counterclockwise direction for islands: ***+1***

First mill the channel, then rough-out: ***+0***
First rough-out, then mill the channel: ***+2***

Merge compensated contours: ***+0***
Merge uncompensated contours: ***+4***

Complete one process for all infeeds before switching to the other process: ***+0***
Mill the channel and rough-out for each infeed depth before continuing to the next depth: ***+8***

**Overlap factor for cycle 4 POCKET MILLING and cycle 5 CIRCULAR POCKET**

***MP7430*** ***0.1 to 1.414***

**Circular path tolerance (permissible distance of end point from perfect circle)**

***MP7431*** ***0.0001 to 0.016 [mm]***

**Behavior of various M functions**

***MP7440*** Stop program run with M06: ***+0***
Do not stop program run with M06: ***+1***

No cycle call with M89: ***+0***
Modal cycle call with M89: ***+2***

Stop program run with M functions: ***+0***
Do not stop program run with M functions: ***+4***

Kv factors no switchable with M105 and M106: ***+0***
Kv factors switchable with M105 and M106: ***+8***

Feed rate reduction in tool axis with M103 F.. not active: ***+0***
Feed rate reduction in tool axis with M103 F.. active: ***+16***

The Kv factors are set by the machine manufacturer. He can provide more information.

**Angle of change in direction still traversed at constant contouring speed (corner with R0, inside corner also radius-compensated)**

Valid for operation with servo lag and feed forward control

***MP7460*** ***0.0000 to 179.9999 [°]***

**Reference for datums from datum table**

***MP7475*** Referenced to workpiece datum: ***0***
Referenced to machine datum: ***1***



Downloaded from www.Manualslib.com manuals search engine

## Electronic handwheels

**Handwheel type**

***MP7640*** Machine without handwheel: ***0***
HR 330 with additional keys– the keys for traverse direction and rapid traverse on the handwheel are evaluated by the NC: ***1***
HR 130 without additional keys: ***2***
HR 330 with additional keys– the keys for traverse direction and rapid traverse on the handwheel are evaluated by the PLC: ***3***
HR 332 with 12 additional keys: ***4***
Multi-axis handwheel with additional keys: 5

**Setting the interpolation factor**

***MP7641*** Interpolation factor is entered from the keyboard: ***0***
Interpolation factor is set by the PLC: ***1***

**Functions set by the machine tool builder for the handwheel**

***MP 7645.0 0 to 255***
***MP 7645.1 0 to 255***
***MP 7645.2 0 to 255***
***MP 7645.3 0 to 255***
***MP 7645.4 0 to 255***
***MP 7645.5 0 to 255***
***MP 7645.6 0 to 255***
***MP 7645.7 0 to 255***



Downloaded from www.Manualslib.com manuals search engine

## 12.2 Miscellaneous Functions (M Functions)

### Miscellaneous functions with predetermined effect

| M | Function | Effective at block start | Effective at block end | Page |
|---|---|---|---|---|
| M00 | Stop program run/Spindle STOP/Coolant OFF | | • | 3-5 |
| M02 | Stop program run/Spindle STOP/Coolant OFF/ Clear status display (depending on machine parameter)/Go to block 1 | | • | 3-5 |
| M03 | Spindle ON clockwise | • | | |
| M04 | Spindle ON counterclockwise | • | | |
| M05 | Spindle STOP | | • | |
| M06 | Tool change/Stop program run (depending on machine parameter)/ Spindle STOP | | • | 3-5 |
| M08 | Coolant ON | • | | |
| M09 | Coolant OFF | | • | |
| M13 | Spindle ON clockwise/Coolant ON | • | | |
| M14 | Spindle ON counterclockwise/Coolant OFF | • | | |
| M30 | Same function as M02 | | • | 3-5 |
| M89 | Vacant miscellaneous function **or** | • | | |
| | Cycle call, modally effective (depending on machine parameter) | | • | 8-3 |
| M90 | Constant contouring speed at corners (effective only in lag mode) | • | | 5-62 |
| M91 | Within the positioning block: Coordinates are referenced to machine zero | • | | 5-65 |
| M92 | Within the positioning block: Coordinates are referenced to position defined by machine builder, such as tool change position | • | | 5-65 |
| M93 | *Reserved* | • | | |
| M94 | Reduce display of rotary axis to value less than 360° | • | | 5-70 |
| M95 | *Reserved* | | • | |
| M96 | *Reserved* | | • | |
| M97 | Machine small contour steps | | • | 5-63 |
| M98 | Completely machine open contours | | • | 5-64 |
| M99 | Blockwise cycle call | | • | 8-3 |



Downloaded from www.Manualslib.com manuals search engine

## Miscellaneous functions with predetermined effect

| M | Function | Effective at block start | Effective at block end | Page |
|---|---|---|---|---|
| M101 | Automatic tool change with sister tool if maximum tool age has expired | • | | 4-15 |
| M102 | Reset M101 | | • | 4-15 |
| M103 | Reduce feed rate during plunging to factor F (percentage) | • | | 5-66 |
| M105 | Machining with first Kv factor | • | | |
| M106 | Machining with second Kv factor | • | | |
| M107 | Suppress error message for replacement tools with oversize | • | | 4-15 |
| M108 | Reset M107 | | • | |
| M109 | Constant contouring speed at tool cutting edge on circular arcs (increase and decrease feed rate) | • | | 5-67 |
| M110 | Constant contouring speed at circular arcs (feed rate decrease only) | • | | 5-67 |
| M111 | Reset M109/M110 | | • | 5-67 |
| M112 | Automatic insertion of rounding arcs at non-tangential straight-line transitions; Enter Tolerance T and Limit Angle A for contour deviation | • | | 5-67 |
| M113 | Reset M112 | | • | |
| M114 | Automatic compensation of machine geometry during operation with tilting axes | • | | 5-69 |
| M115 | Reset M114 | | • | |
| M116 | Feed rate for angular axes in mm/min | • | | 5-69 |
| M118 | Superimpose handwheel positioning during program run | • | | 5-70 |
| M124 | Ignore points for calculating the rounding arc with M112 | • | | 5-70 |
| M126 | Move rotary axes by shortest path | • | | 5-68 |
| M127 | Reset M126 | • | | 5-68 |
| M200 | Output programmed voltage directly through S analog (laser cutting) | • | | 5-71 |
| M201 | Output voltage as a function of distance through S analog (laser cutting) | • | | 5-71 |
| M202 | Output voltage as a function of speed through S analog (laser cutting) | • | | 5-71 |
| M203 | Output voltage as a function of time through S analog (ramp, laser cutting) | • | | 5-72 |
| M204 | Output voltage as a function of time through S analog (pulse, laser cutting) | • | | 5-72 |

The miscellaneous functions M105 and M106 are defined and enabled by the machine builder. Please contact your machine builder for more information.



Downloaded from www.Manualslib.com manuals search engine

## Vacant miscellaneous functions

The vacant miscellaneous functions are used by the machine-tool builder for machine-specific functions. You will find a description of these functions in the operating manual for your machine tool.

**Effect of vacant miscellaneous functions**

| M | Function | Effective at | |
|---|---|---|---|
| | | start of block | end of block |
| M01 | | | • |
| M07 | | • | |
| M10 | | | • |
| M11 | | • | |
| M12 | | | • |
| M15 | | • | |
| M16 | | • | |
| M17 | | • | |
| M18 | | • | |
| M19 | | | • |
| M20 | | • | |
| M21 | | • | |
| M22 | | • | |
| M23 | | • | |
| M24 | | • | |
| M25 | | • | |
| M26 | | • | |
| M27 | | • | |
| M28 | | • | |
| M29 | | • | |
| M31 | | • | |
| M32 | | | • |
| M32 | | | • |
| M34 | | | • |
| M35 | | | • |
| M36 | | • | |
| M37 | | • | |
| M38 | | • | |
| M39 | | • | |
| M40 | | • | |
| M41 | | • | |
| M42 | | • | |
| M43 | | • | |
| M44 | | • | |
| M45 | | • | |
| M46 | | • | |
| M47 | | • | |
| M48 | | • | |
| M49 | | • | |

| M | Function | Effective at | |
|---|---|---|---|
| | | start of block | end of block |
| M50 | | • | |
| M51 | | • | |
| M52 | | | • |
| M53 | | | • |
| M54 | | | • |
| M55 | | • | |
| M56 | | • | |
| M57 | | • | |
| M58 | | • | |
| M59 | | • | |
| M60 | | | • |
| M61 | | • | |
| M62 | | • | |
| M63 | | | • |
| M64 | | | • |
| M65 | | | • |
| M66 | | | • |
| M67 | | | • |
| M68 | | | • |
| M69 | | | • |
| M70 | | | • |
| M71 | | • | |
| M72 | | • | |
| M73 | | • | |
| M74 | | • | |
| M75 | | • | |
| M76 | | • | |
| M77 | | • | |
| M78 | | • | |
| M79 | | • | |
| M80 | | • | |
| M81 | | • | |
| M82 | | • | |
| M83 | | • | |
| M84 | | • | |
| M85 | | • | |
| M86 | | • | |
| M87 | | • | |
| M88 | | • | |



Downloaded from www.Manualslib.com manuals search engine

## 12.3 Pre-assigned Q Parameters

The Q parameters Q100 to Q113 are assigned values by the TNC. These values include:

- Values from the PLC
- Tool and spindle data
- Data on operating status etc.

**Values from the PLC: Q100 to Q107**

The TNC uses the parameters Q100 to Q107 to transfer values from the PLC to an NC program.

**Tool radius: Q108**

The current value of the tool radius is assigned to Q108.

**Tool axis: Q109**

The value of the Q parameter Q109 depends on the current tool axis.

| Tool axis | Parameter value |
|---|---|
| No tool axis defined | Q109 = –1 |
| Z axis | Q109 = 2 |
| Y axis | Q109 = 1 |
| X axis | Q109 = 0 |

**Spindle status: Q110**

The value of the parameter Q110 depends on the last programmed M function.

| M function | Parameter value |
|---|---|
| No spindle status defined | Q110= –1 |
| M03: Spindle ON, clockwise | Q110= 0 |
| M04: Spindle ON, counterclockwise | Q110= 1 |
| M05 after M03 | Q110= 2 |
| M05 after M04 | Q110= 3 |

**Coolant on/off: Q111**

| M function | Parameter value |
|---|---|
| M08: Coolant on | Q111 = 1 |
| M09: Coolant off | Q111 = 0 |



Downloaded from www.Manualslib.com manuals search engine

### Overlap factor: Q112

The overlap factor for pocket milling (MP 7430) is assigned to Q112.

### Units of measure for dimensions in the part program: Q113

The value of the parameter Q113 specifies whether the highest-level NC program (for nesting with PGM CALL) is programmed in millimeters or inches.

| Dimensions in the main program | Parameter value |
|---|---|
| Metric system (millimeters)<br>Inch system (inches) | Q113 = 0<br>Q113 = 1 |

### Tool length: Q114

The current value for tool length is assigned to Q114.

### Coordinates after probing during program run

The parameters Q115 to Q119 contain the coordinates of the spindle position at the time of contact during a programmed measurement with the 3D touch probe. The length and radius of the probe tip are not compensated in these coordinates.

| Coordinate axis | Parameter |
|---|---|
| X axis<br>Y axis<br>Z axis<br>IVth axis<br>Vth axis | Q115<br>Q116<br>Q117<br>Q118<br>Q119 |

### Actual-nominal deviation during automatic tool measurement with the TT 110 touch probe

| Actual-nominal deviation | Parameter |
|---|---|
| Tool length<br>Tool radius | Q115<br>Q116 |



Downloaded from www.Manualslib.com manuals search engine

## 12.4 Features, Specifications and Accessories

**Brief description**

Contouring control with digital speed control
for machines with up to 5 axes and oriented spindle stop

**Components**

Logic unit, keyboard, color VDU with soft keys

**Data interfaces**

RS-232-C / V.24
RS-422 / V.11

Expanded data interface with LSV-2 protocol for remote operation of the TNC through the data interface with HEIDENHAIN software TNC REMOTE

**Simultaneous axis control for contour elements**

- Straight lines up to 5 axes
  (TNC 407: 3 axes; export versions TNC 415 F, TNC 425 E: 4 axes)
- Circles up to 3 axes (with tilted working plane)
- Helices 3 axes

**"Look Ahead"**

- Defined rounding of discontinuous contour transitions (e.g. for 3D surfaces)
- Collision prevention with the SL cycle for open contours
- Geometry pre-calculation for feed rate adaptation

**Background programming**

Editing one part program while the TNC runs another
(on TNC 407 without graphics)

**Graphics**

Interactive programming graphics
Test run graphics
Simultaneous program run graphics (not with TNC 407)

**File types**

- HEIDENHAIN conversational and ISO programming
- Tool tables, datum tables, pallet files
- Text and system files

**Program memory**

- Battery buffered for up to 100 files
- Capacity 256 kilobytes (TNC 407: 128 kilobytes)

**Tool definitions**

- Up to 254 tools in the program or in tables



Downloaded from www.Manualslib.com manuals search engine

## Programmable functions

### Contour elements

Straight line, chamfer, circular arc, circle center, circle radius, tangentially connecting circular arc, corner rounding, straight lines and circular arcs for approaching and departing a contour

### Free contour programming

For all contour elements not dimensioned for conventional NC programming

### Three-dimensional radius compensation (not TNC 407)

For changing tool data without having to recalculate the part program

### Program jumps

Subprogram, program section repetition, main program as subprogram

### Fixed cycles

Peck drilling, tapping (also with synchronized spindle), thread cutting, rectangular and circular pocket milling, slot milling, milling pockets and islands from a list of subcontour elements, cylindrical surface interpolation

### Coordinate transformations

Datum shift, mirroring, rotation, scaling factor, tilting the working plane (not TNC 407)

### 3D touch probe applications

Touch probe functions for setting datums and for automatic workpiece measurement
Digitizing 3D surfaces with the optional TM 110 touch probe (not on TNC 407)
Digitizing 3D surfaces with the optional TM 120 touch probe
Automatic tool measurement with the TT 110 touch probe

### Mathematical functions

Basic arithmetic (+, –, x, ÷)
Trigonometry (sin, cos, tan, arcsin, arcos, arctan)
Square roots ($\sqrt{a}$) and root sum of squares ($\sqrt{a^2 + b^2}$)
Squaring (SQ)
Powers (^)
$\pi$
Logarithms
Exponential functions
Negation (NEG)
Forming an integer (INT)
Forming an absolute number (ABS)
Dropping the values before the decimal point (FRAC)
Logical comparisons (greater than, less than, equal, not equal)



Downloaded from www.Manualslib.com manuals search engine

**TNC Specifications**

| | | | |
|---|---|---|---|
| Block execution time | 4 ms/block<br>TNC 407: 25 ms/block | | |
| Control loop cycle time | TNC 425: | Contouring interpolation<br>Fine interpolation | : 3 ms<br>: 0.6 ms (speed) |
| | TNC 415 B: | Contouring interpolation<br>Fine interpolation | : 3 ms<br>: 0.6 ms (contour) |
| | TNC 407: | 6 ms | |
| Data transfer rate | Maximum 38 400 baud | | |
| Ambient temperature | 0° C to 45° C (operation)<br>–30° C to 70° C (storage) | | |
| Traverse | Maximum ± 100 m (± 2540 in.) | | |
| Traversing speed | Maximum 300 m/min (11 810 ipm) | | |
| Spindle speed | Maximum 99 999 rpm | | |
| Input range | Minimum 0.1 µm (0.000 01 in.) or 0.0001°<br>TNC 407, TNC 415 F, TNC 425 E: 1 µm<br>Maximum 99 999.999 mm (3937 inches)<br>or 99 999.999° | | |



Downloaded from www.Manualslib.com manuals search engine

## Accessories

### FE 401 floppy disk unit

| | |
|---|---|
| Description | Portable table-top unit |
| Applications | All TNC contouring controls as well as TNC 131, TNC 135 |
| Data interfaces | 2 interfaces RS-232-C/V.24 |
| Data transfer rate | • TNC : 2400 to 38 400 baud<br>• PRT : 110 to 9600 baud |
| Disk drives | Separate drive for copying, capacity 795 kilobytes (approx. 25,000 blocks), up to 256 files |
| Floppy disks | 3.5 inch, DS DD, 135 TPI |

### TS 120 and TS 511 triggering 3D touch probes

| | |
|---|---|
| Description | Touch probe system with ruby tip and stylus with rated break point, standard shank for spindle insertion |
| Transmission and interface | TS 120: Cable transmission, integrated interface<br>TS 511: Infrared transmission, separate transmitting and receiving units |
| Spindle insertion | TS 120: manual<br>TS 511: automatic |
| Probing reproducibility | Better than 1 µm (0.000 04 in.) |
| Probing speed | Maximum 3 m/min (118 ipm) |



Downloaded from www.Manualslib.com manuals search engine

**TT 110 triggering 3D touch probe**

| | |
|---|---|
| Description | Touch probe system with hardened, stainless-steel probing element (steel plate), class of protection: IP 67 |
| Interface | Connected to TNC via 5 V supply |
| Installation | Fixed installation within the machine working space |
| Probing speed | Maximum 3 m/min (118 ipm) |

**Electronic handwheels**

| | |
|---|---|
| HR 130 | • Integrable unit |
| HR 150 | • Fixed-axis handwheel for the HRA 110 adapter |
| HR 330 | • Portable version, transmission via cable. Includes axis address keys, rapid traverse key, safety switch, emergency stop button. |
| HR 410 | • Portable version, transmission via cable. Includes axis address keys, 3 feed rate keys, 3 keys for arbitrary machine functions, safety switch, emergency stop button. |



Downloaded from www.Manualslib.com manuals search engine

## 12.5 TNC Messages

The TNC automatically generates error messages when it detects problems such as

- Incorrect data input
- Logical errors in the program
- Contour elements that are impossible to machine
- Incorrect use of the touch probe system

An error message containing a program block number was caused by an error in that block or in the preceding block. To clear a TNC error message, first correct the error and then press the CE key.

Some of the more frequent TNC error messages are explained in the following list.

### TNC messages during programming

**ENTRY VALUE INCORRECT**

- Enter a correct LBL number.
- Note the input limits.

**EXT. IN-/OUTPUT NOT READY**

Correctly connect the external device.

**FURTHER PROGRAM ENTRY IMPOSSIBLE**

Erase some old files to make room for new ones.

**JUMP TO LABEL 0 NOT PERMITTED**

Do not program CALL LBL 0.

**LABEL NUMBER ALLOCATED**

A given label number can only be entered once in a program.

**PROTECTED PGM !**

Cancel edit protection if you wish to edit the program.



Downloaded from www.Manualslib.com manuals search engine

## TNC messages during test run and program run

**ANGLE REFERENCE MISSING**

- Complete your definition of the arc and its end points.
- Define the polar coordinate angle correctly.

**ARITHMETICAL ERROR**

You have calculated with illegal values.

- Define values within the range limits
- Choose probe positions for the 3D touch probe that are farther apart
- You are using the TT to measure individual teeth on a tool that, according to the tool table, has 0 teeth. Enter the correct number of teeth.
- Run the TCH PROBE 30 cycle (calibrating the TT) before measuring the tool length or radius.
- All calculations must be mathematically possible

**AXIS DOUBLE PROGRAMMED**

Each axis can have only one value for position coordinates.

**BLK FORM DEFINITION INCORRECT**

- Program the MIN and MAX points according to the instructions.
- Choose a ratio of sides less than 200:1.

**CALIBRATE TOUCH PROBE**

The machine parameters for the touch probe were changed. Recalibrate the touch probe.

**CHAMFER NOT PERMITTED**

A chamfer block must be located between two straight line blocks with identical radius compensation.

**CIRCLE CENTER UNDEFINED**

- Define a circle center with the CC key.
- Define a pole with the CC key.

**CIRCLE END POS. INCORRECT**

- Enter complete information for connecting circle.
- Enter end points that lie on the circular path.

**CYCL INCOMPLETE**

- Define the cycles with all data in the proper sequence.
- Do not call the coordinate transformation cycles.
- Define a cycle before calling it.
- Enter a pecking depth other than 0.



Downloaded from www.Manualslib.com manuals search engine

**EXCESSIVE SUBPROGRAMMING**

- Conclude subprograms with LBL0
- Program a LBL CALL for subprograms without repetitions (REP).
- Program a LBL CALL for program section repetitions to include the repetitions (REP).
- Subprograms cannot call themselves.
- Subprograms cannot be nested in more than eight levels.
- Main programs cannot be nested as subprograms in more than four levels.

**FEED RATE IS MISSING**

- Enter the feed rate for the positioning block.
- Enter FMAX in each sentence.

**GROSS POSITIONING ERROR**

The TNC monitors positions and movements. If the actual position deviates excessively from the nominal position, this blinking error message is displayed. Press the END key for a few seconds to acknowledge the error message (warm start).

**KEY NON-FUNCTIONAL**

This message always appears when you press a key that is not needed for the current dialog.

**LABEL NUMBER NOT ALLOCATED**

Call only label numbers that have been set.

**NO EDITING OF RUNNING PROGRAM**

A program cannot be edited while it is being transmitted or executed.

**PATH OFFSET WRONGLY ENDED**

Do not cancel tool radius compensation in a block with a circular path.

**PATH OFFSET WRONGLY STARTED**

- Use the same radius compensation before and after an RND and CHF block
- Do not begin tool radius compensation in a block with a circular path



Downloaded from www.Manualslib.com manuals search engine

**PGM-SECTION CANNOT BE SHOWN**

- Enter a smaller tool radius.
- 4D and 5D movements cannot be graphically simulated.
- Enter a tool axis for simulation that is the same as the axis in the BLK FORM.

**PLANE WRONGLY DEFINED**

- Do not change the tool axis while a basic rotation is active.
- Define the main axes for circular arcs correctly.
- Define both main axes for CC.

**PROBE SYSTEM NOT READY**

- Orient the transmitting/receiving window of the TS 511 to the receiving unit.
- Check whether the touch probe is ready for operation.

**PROGRAM-START UNDEFINED**

- Begin the program at a TOOL DEF block.
- Do not resume an interrupted program at a block with a tangential arc or if a previously defined pole is needed.

**RADIUS COMPENSATION UNDEFINED**

Enter a radius compensation RR or RL in the first subprogram to cycle 14 CONTOUR GEOM.

**ROUNDING OFF NOT PERMITTED**

Enter tangentially connecting circles and rounding circles correctly.

**ROUNDING RADIUS TOO LARGE**

Rounding arcs must fit between contour elements.

**SCALING FACTOR NOT PERMITTED**

Enter identical scaling factors for coordinate axes in the plane of the circle.



Downloaded from www.Manualslib.com manuals search engine

**SELECTED BLOCK NOT ADDRESSED**

Before a test run or program run, you must enter GOTO 0.

**STYLUS ALREADY IN CONTACT**

Before probing, pre-position the stylus where it is not touching the workpiece surface.

**TOOL LIFE EXPIRED**

TIME1 or TIME2 of TOOL.T has been exceeded with no replacement tool defined in the tool table.

**TOOL RADIUS TOO LARGE**

Enter a tool radius that
- lies within the given limits
- permits the contour elements to be calculated and machined.

**TOUCH POINT INACCESSIBLE**

- Pre-position the 3D touch probe to a point nearer the model.
- The TT110 is in a position different from that entered in the corresponding machine parameters .

**WRONG AXIS PROGRAMMED**

- Do not attempt to program locked axes.
- Program a rectangular pocket or slot in the working plane.
- Do not mirror rotary axes.
- Enter a positive chamfer length.

**WRONG RPM**

Program a spindle speed within the permissible range.

**WRONG SIGN PROGRAMMED**

Enter the correct sign for the cycle parameter.



Downloaded from www.Manualslib.com manuals search engine

## TNC messages during digitizing

**AXIS DOUBLE PROGRAMMED**

Program two different axes for the coordinates of the starting point (CONTOUR LINES cycle).

**EXCHANGE TOUCH PROBE BATTERY**

Change the battery in the probe head (TS 511).
This message is output when the digitizing probe reaches the end of a line.

**FAULTY RANGE DATA**

- Enter MIN coordinates that are smaller than their MAX coordinates.
- Define the RANGE within the limits through software limit switches.
- Define the RANGE for the MEANDER and CONTOUR LINES cycles.

**MIRRORING NOT PERMITTED**

Reset all coordinate transformations before digitizing.

**PLANE WRONGLY DEFINED**

Define the starting position coordinates (CONTOUR LINES cycle) in axes different from the stylus axis.

**PROBE SYSTEM NOT READY**

- Orient the transmission/reception window of the TS 511 towards the transceiver
- Check whether the touch probe system is ready for operation.
- Touch probe cannot be retracted
- Measuring touch probe: one or more axes of the measuring touch probe are defective. Contact your service agency.

**RANGE EXCEEDED**

Enter a RANGE that includes the entire 3D surface to be scanned.



Downloaded from www.Manualslib.com manuals search engine

**ROTATION NOT PERMITTED**

Reset all coordinate transformations before digitizing.

**SCALING FACTOR NOT PERMITTED**

Reset all coordinate transformations before digitizing.

**START POSITION INCORRECT**

Program the starting point coordinates for the CONTOUR LINES cycle within the RANGE.

**STYLUS ALREADY IN CONTACT**

Pre-position the touch probe so that the stylus cannot be deflected outside the RANGE.

**TIME LIMIT EXCEEDED**

Enter a TIME LIMIT that is appropriate to the 3D surface to be scanned (CONTOUR LINES cycle).

**TOO MANY POINTS**

You can define up to 893 points in the PNT file; scan the digitizing range again and, if necessary, program a larger probe point interval.

**TOUCH POINT INACCESSIBLE**

- The stylus must not be deflected before it reaches the RANGE.
- The stylus must be deflected somewhere within the RANGE.

**WRONG AXIS PROGRAMMED**

- Enter calibrated touch probe axis in the RANGE cycle.
- Enter the correct rotary axis in the RANGE cycle.
- Do not program the same axes twice in the RANGE cycle.



Downloaded from www.Manualslib.com manuals search engine

# Sequence of Program Steps

## Milling an outside contour

| Program step | Key | Section in manual |
|---|---|---|
| **1 Open or select program**<br>Entries: Program name<br>Unit of measurement in program<br>Blank form for graphic displays | PGM NAME | 4.6 |
| **2 Define tool(s)**<br>Entries: Tool number<br>Tool length<br>Tool radius | TOOL DEF | 4.2 |
| **3 Call tool data**<br>Entries: Tool number<br>Spindle axis<br>Spindle speed | TOOL CALL | 4.2 |
| **4 Tool change**<br>Entries: Coordinates of tool change position<br>Radius compensation<br>Feed rate (rapid traverse)<br>Miscellaneous function (tool change) | | e.g. 5.4 |
| **5 Approach starting position**<br>Entries: Coordinates of the starting position<br>Radius compensation (R0)<br>Feed rate (rapid traverse)<br>Miscellaneous function (spindle ON clockwise) | | 5.2/5.4 |
| **6 Approach contour**<br>Entries: Coordinates of the first contour point<br>Coordinate of the (first) working depth<br>Radius compensation for machining<br>Machining feed rate | APPR DEP | 5.2 |
| **7 Machining to last contour point**<br>Entries: Enter all required data for each contour element | | 5 to 8 |
| **8 Depart contour**<br>Entries: Information on end position<br>Feed rate (rapid traverse)<br>Miscellaneous function (spindle STOP, return) | APPR DEP | 5.2 |
| **9 End of program** | | |

Downloaded from www.Manualslib.com manuals search engine

| M | Effect of M function | Effective at start of block | end of block | Page |
|---|---|---|---|---|
| M00 | STOP program run/Spindle STOP/Coolant OFF | | • | 3-5 |
| M02 | STOP program run/Spindle STOP/Coolant OFF/Clear status display (depending on machine parameter)/Go to block 1 | | • | 3-5 |
| M03 | Spindle ON clockwise | • | | |
| M04 | Spindle ON counterclockwise | • | | |
| M05 | Spindle STOP | | • | |
| M06 | Tool change/Stop program run (depending on machine parameter)/Spindle STOP | | • | 3-5 |
| M08 | Coolant ON | • | | |
| M09 | Coolant OFF | | • | |
| M13 | Spindle ON clockwise/coolant ON | • | | |
| M14 | Spindle ON counterclockwise/coolant ON | • | | |
| M30 | Same as M02 | | • | 3-5 |
| M89 | Vacant miscellaneous function **or** | • | | |
| | Cycle call, modally effective (depending on machine parameter) | | • | 8-3 |
| M90 | Constant contouring speed at corners (effective only in lag mode) | • | | 5-62 |
| M91 | Within the positioning block: Coordinates are referenced to machine zero | • | | 5-65 |
| M92 | Within the positioning block: Coordinates are referenced to position defined by machine builder, such as tool change position | • | | 5-65 |
| M93 | Reserved | • | | |
| M94 | Reduce display of rotary axis to value less than 360° | • | | 5-70 |
| M95 | Reserved | | • | |
| M96 | Reserved | | • | |
| M97 | Machine small contour steps | | • | 5-63 |
| M98 | Completely machine open contours | | • | 5-64 |
| M99 | Blockwise cycle call | | • | 8-3 |
| M101 | Automatic tool change with replacement tool if maximum tool life has expired | • | | 4-15 |
| M102 | Reset M101 | | • | 4-15 |
| M103 | Reduce feed rate during plunging to factor F (percentage) | • | | 5-66 |
| M105 | Machining with first Kv factor | • | | |
| M106 | Machining with second Kv factor | • | | |
| M107 | Suppress error message for replacement tools with oversize | • | | 4-15 |
| M108 | Reset M107 | | • | |
| M109 | Constant contouring speed at tool cutting edge on circular arcs (increase and decrease feed rate) | • | | 5-67 |
| M110 | Constant contouring speed at tool cutting edge on circular arcs (feed rate decrease only) | • | | 5-67 |
| M111 | Reset M109/M110 | | • | 5-67 |
| M112 | Automatic insertion of rounding arcs at non-tangential straight-line transitions; Enter Tolerance T for contour deviation | • | | 5-67 |
| M113 | Reset M112 | | • | |
| M114 | Automatic compensation of machine geometry during operation with tilting axes | • | | 5-69 |
| M115 | Reset M114 | | • | |
| M116 | Feed rate for angular axes in mm/min | • | | 5-69 |
| M118 | Superimpose handwheel positioning during program run | • | | 5-70 |
| M124 | Ignore points for calculating rounding arc with M112 | • | | 5-68 |
| M126 | Shorter-path traverse of rotary axes | • | | 5-68 |
| M127 | Reset M126 | | • | 5-68 |
| M200 | Laser cutting: Output programmed voltage directly | • | | 5-71 |
| M201 | Laser cutting: Output voltage as function of distance | • | | 5-71 |
| M202 | Laser cutting: Output voltage as function of speed | • | | 5-71 |
| M203 | Laser cutting: Output voltage as function of time (ramp) | • | | 5-72 |
| M204 | Laser cutting: Output voltage as function of time (pulse) | • | | 5-72 |

Miscellaneous functions M105 and M106 are defined and enabled by the machine tool builder. Please contact the machine tool builder for more information.

Downloaded from www.Manualslib.com manuals search engine